INOVANCE

FORWARD, ALWAYS PROGRESSING



MX3-INT Series
Electric Spindle Motor (Second Generation)
User Guide

Industrial Automation | Intelligent Elevator | New Energy Vehicle | Industrial Robot | Rail Transit

Data code PS00017754A00

Preface

Introduction

The second-generation MX3-INT series spindle motor is a direct drive motor for weaving machines. It has superior torque-volume ratio and torque-inertia ratio. When used together with Inovance TAJ/TWJ series control cabinets, it can form a spindle beating system featuring high efficiency, energy conservation, simple maintenance, and stepless speed regulation.

This user guide describes the basic information, installation, commissioning and operation of the motor.

More data

Data name	Data code
TWJ300 Series Water Jet Weaving Machine Electric Control System User Guide	19011406
TAJ200 Series Air Jet Loom Electric Control System User Guide	19011189

Revision History

Date	Version	Description
August 2024	A00	First release

Access to the Guide

This guide is not delivered with the product. You can obtain the PDF version by the following methods:

- Do keyword search under Service and Support at *http://www.inovance.com*.
- Scan the QR code on the product with your smart phone.
- Scan the QR code below to install My Inovance app, where you can search for and download user guides.

Warranty Disclaimer

Inovance provides warranty service within the warranty period (as specified in your order) for faults or damage that occur during normal operation. Maintenance will be charged after the warranty expires.

Within the warranty period, maintenance will be charged for the following damage:

- Damage caused by operations not following the instructions in the user guide

- Damage caused by fire, flood, or unusual voltage
- Damage caused by unintended use of the product
- Damage caused by use beyond the specified scope of application of the product
- Damage or secondary damage caused by force majeure (natural disaster, earthquake, and lightning strike)

The maintenance is charged according to the latest Price List of Inovance. If otherwise agreed upon, the terms and conditions in the agreement shall prevail.

For details, see Product Warranty Card.

Table of Contents

Preface 1
Fundamental Safety Instructions 4
1 Product Information 12
1.1 Model and Nameplate 12
1.2 Components 13
1.3 Product Dimensions 14
2 Product Specifications 15
2.1 Mechanical Characteristics 15
2.2 Electrical Specifications 15
2.3 Torque-Speed Characteristics 16
2.4 Altitude-based Derating Characteristics 16
2.5 Option 17
2.6 Servo System Configuration 19
3 Installation Guidance 20
3.1 Fundamental Safety Instructions 20
3.2 Installation Flowchart 21
3.3 Preparation Before Installation 22
3.4 Installation Method 25
4 Commissioning and Operation 32
4.1 Commissioning Precautions 32
4.2 Inspection Before Commissioning 32
4.3 Commissioning Procedure 33
5 Maintenance 35
6 Disassembly Instructions 36

Fundamental Safety Instructions

Safety precautions

- This chapter provides essential safety instructions for proper use of the equipment. Before operating the equipment, read through the guide and comprehend all the safety instructions. Failure to observe the safety precautions may result in serious injuries or death of personnel or device damage.
- "DANGER", "WARNING", and "CAUTION" items in this guide do not indicate all safety precautions that need to be followed; instead, they just supplement the safety precautions.
- Use this product according to the designated environment requirements. Damage caused by improper use is not covered by warranty.
- Inovance shall take no responsibility for any personal injuries or property damage caused by improper usage.

Safety Levels and Definitions



Indicates that failure to comply with the notice can result in death or severe personal injury.



Indicates that failure to comply with the notice may result in death or severe personal injury.



Indicates that failure to comply with the notice may result in minor or moderate personal injury or equipment damage.

Safety Precautions

- Drawings in the guide are sometimes shown without covers or protective guards. Remember to install the covers or protective guards as specified first, and then perform operations in accordance with the instructions.
- The drawings in the guide are shown for illustration only and may be different from the product you purchased.
- Operators must take mechanical precautions to protect personal safety and wear protective equipment, such as anti-smashing shoes, safety clothing, safety glasses, protective gloves, and protective sleeves.

Unpacking
 • Do not install the equipment if you find damage, rust, or signs of use on the equipment or accessories upon unpacking. • Do not install the equipment if you find water seepage or missing or damaged components upon unpacking. • Do not install the equipment if you find the packing list does not conform to the equipment you received.
 • Check whether the packing is intact and whether there is damage, water seepage, dampness, and deformation before unpacking. • Unpack the package by following the package sequence. Do not hit the package with force. • Check whether there is damage, rust, or signs of bumping on the surface of the equipment and equipment accessories before unpacking. • Check whether the package contents are consistent with the packing list before unpacking.

Storage and Transportation



- Large-scale or heavy equipment must be transported by qualified professionals using specialized hoisting equipment. Failure to comply may result in personal injuries or equipment damage.
- Before hoisting the equipment, ensure the equipment components such as the front cover and terminal blocks are secured firmly with screws. Loosely-connected components may fall off and result in personal injuries or equipment damage.
- Never stand or stay below the equipment when the equipment is being hoisted by the hoisting equipment.
- When hoisting the equipment with a steel rope, ensure the equipment is hoisted at a constant speed without suffering from vibration or shock. Do not turn the equipment over or let the equipment stay hanging in the air. Failure to comply may result in personal injuries or equipment damage.



- Handle the equipment with care during transportation and mind your steps to prevent personal injuries or equipment damage.
- When carrying the equipment with bare hands, hold the equipment casing firmly with care to prevent parts from falling. Failure to comply may result in personal injuries.
- Store and transport the equipment based on the storage and transportation requirements. Failure to comply can result in equipment damage.
- Avoid storing or transporting the equipment in environments with water splash, rain, direct sunlight, strong electric field, strong magnetic field, and strong vibration.
- Avoid storing the product for more than 3 months. When the product needs to be stored for an extended period, take more strict protection and necessary inspection.
- Pack the equipment strictly before transportation. Use a sealed box for long-distance transportation.
- Never transport the drive with other equipment or materials that may harm or have negative impacts on the drive.

Installation

DANGER

- The equipment can be operated only by professionals with electrical knowledge. Non-professionals are not allowed to operate on the equipment.

WARNING

- Read through the guide and safety instructions before installation.
- Do not install this equipment in places with strong electric or magnetic fields.
- Before installation, check that the mechanical strength of the installation site can bear the weight of the equipment. Failure to comply will result in mechanical hazards.
- Do not wear loose clothes or accessories during installation. Failure to comply may result in an electric shock.
- When installing the equipment in a closed environment (such as a cabinet or casing), use a cooling device (such as a fan or air conditioner) to cool the environment down to the required temperature. Failure to comply may result in equipment over-temperature or a fire.
- Do not retrofit the equipment.
- Do not fiddle with the bolts used to fix equipment components or the bolts marked in red.
- When the equipment is installed in a cabinet or final assembly, a fireproof enclosure providing both electrical and mechanical protections must be provided. The IP rating must meet IEC standards and local laws and regulations.
- Before installing devices with strong electromagnetic interference, such as a transformer, install a shielding device for the equipment to prevent malfunction.
- Install the product on an incombustible object such as metal and do not touch or attach the product to combustibles. Failure to comply can result in fire accident.

CAUTION

- Cover the top of the equipment with a piece of cloth or paper during installation. This is to prevent unwanted objects such as metal chippings, oil, and water from falling into the equipment and causing faults. After installation, remove the cloth or paper on top of the equipment to prevent over-temperature caused by poor ventilation due to blocked ventilation holes.
- Resonance may occur when the equipment operating at a constant speed executes variable speed operations. In this case, install the vibration-proof rubber under the motor frame or use the vibration suppression function to reduce resonance.

Wiring



- Equipment installation, wiring, maintenance, inspection, or parts replacement must be performed only by professionals.
- Before wiring, disconnect all the power supplies of the equipment, and wait for at least the time designated on the equipment warning label before further operations because residual voltage still exists after power-off. Measure the DC voltage of the main circuit and ensure that the voltage is within the safety range. Failure to comply can result in an electric shock.
- Do not perform wiring, remove the equipment cover, or touch the circuit board with power ON. Failure to comply will result in an electric shock.
- Check that the equipment is grounded properly. Failure to comply can result in an electric shock.



- Do not connect the input power supply to the output end of the equipment. Failure to comply can result in equipment damage or even a fire.
- When connecting a drive to the motor, check that the phase sequences of the drive and motor terminals are consistent to prevent reverse motor rotation.
- Cables used for wiring must meet cross sectional area and shielding requirements. The shield of the cable must be reliably grounded at one end.
- Fix the terminal screws with the tightening torque specified in the user guide. Improper tightening torque may overheat or damage the connecting part, resulting in a fire.
- After wiring is done, check that all cables are connected properly and no screws, washers or exposed cables are left inside the equipment. Failure to comply may result in electric shock or equipment damage.



- Follow the proper electrostatic discharge (ESD) procedure and wear an anti-static wrist strap to perform wiring. Failure to comply may result in damage to the equipment or to the internal circuit of the product.
- Use shielded twisted pairs for the control circuit. Connect the shield to the grounding terminal of the equipment for grounding purpose. Failure to comply can result in equipment malfunction.

Power-on



- Before power-on, check that the equipment is installed properly with reliable wiring and the motor can be restarted.
- Check that the power supply meets equipment requirements before power-on to prevent equipment damage or fire accident.
- Do not open the cabinet door or protective cover of the product, touch any wiring terminal of the product, or remove any part of the product with power on. Failure to comply can result in an electric shock.



- Perform a trial run after wiring and parameter setting to ensure the equipment operates safely. Failure to comply may result in personal injuries or equipment damage.
- Before power-on, check that the rated voltage of the equipment is consistent with that of the power supply. Failure to comply may result in a fire.
- Before power-on, check that no one is near the equipment, motor, or machine. Failure to comply may result in death or personal injury.

Operation



- The equipment must be operated only by professionals. Failure to comply can result in death or personal injury.
- Do not touch any connecting terminals or disassemble any unit or component of the equipment during operation. Failure to comply can result in an electric shock.



- Do not touch the equipment casing, fan, or resistor with bare hands to feel the temperature. Failure to comply may result in personal injuries.
- Prevent metal or other objects from falling into the equipment during operation. Failure to comply may result in a fire or equipment damage.

Maintenance



- Equipment installation, wiring, maintenance, inspection, or parts replacement must be performed only by professionals.
- Do not maintain the equipment with power on. Failure to comply can result in electric shock.
- Before maintenance, disconnect all the power supplies of the equipment and wait for at least the time designated on the equipment warning label.
- When a permanent magnet motor is used, do not touch the motor terminals immediately after power-off because the motor terminals can generate induced voltage during rotation even after the equipment power supply is off. Failure to comply can result in an electric shock.



- Perform routine and periodic inspection and maintenance on the equipment according to maintenance requirements and keep a maintenance record.

Repair



- Equipment installation, wiring, maintenance, inspection, or parts replacement must be performed only by professionals.
- Do not repair the equipment with power on. Failure to comply can result in an electric shock.
- Before inspection and repair, cut off all the power supplies of the equipment and wait for at least the time designated on the equipment warning label.



- Require for repair services according to the product warranty agreement.
- When the fuse is blown or the circuit breaker or earth leakage current breaker (ELCB) trips, wait for at least the time designated on the equipment warning label before power-on or further operations. Failure to comply may result in death, personal injury or equipment damage.
- When the equipment is faulty or damaged, the troubleshooting and repair work must be performed by professionals that follow the repair instructions, with repair records kept properly.
- Replace quick-wear parts of the equipment according to the replacement instructions.
- Do not operate on damaged equipment. Failure to comply may result in death, personal injury, or severe equipment damage.
- After the equipment is replaced, check the wiring and set parameters again.

Disposal
WARNING • Dispose of retired equipment in accordance with local regulations and standards. Failure to comply may result in property damage, personal injuries, or even death. • Recycle retired equipment by observing industry waste disposal standards to avoid environmental pollution.

Safety Labels

For safe operation and maintenance, comply with the safety labels on the equipment. Do not damage or remove the safety labels. See the following table for descriptions of the safety labels.

Safety Label	Description
	• Read through the safety instructions before operating the equipment. Failure to comply may result in death, personal injuries, or equipment damage. • Do not touch the terminals or remove the cover with power ON or within 10 min after power-off. Failure to comply will result in an electric shock.

1 Product Information

1.1 Model and Nameplate

MX3 - 50C 70B - INT
① ② ③ ④

① **Product type** MX3: Second-generation electric spindle motor	② **Rated power (W)** (comprised of two digits and a letter) A: x 1 B: x 10 C: x 100 Example: 50C: 5000 W
③ **Rated speed (rpm)** (comprised of two digits and a letter) A: x 1 B: x 10 C: x 100 Example: 70B: 700 rpm	④ **Model type** INT: Global version

Figure 1-1 Model

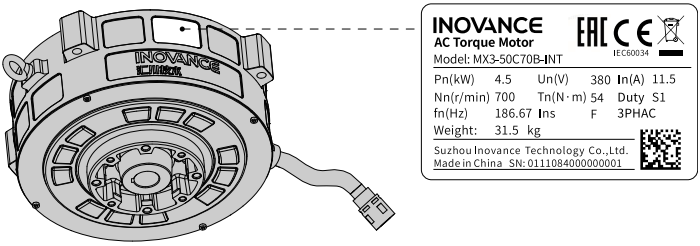

Figure 1-2 Nameplate description

1.2 Components

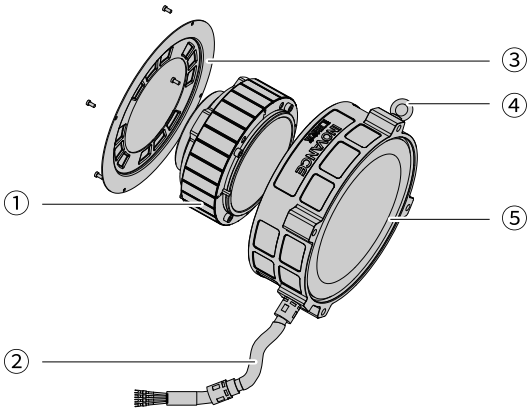

Figure 1-3 Components of the motor

No.	Name	Remarks
①	Motor rotor	The stator and rotor are supplied together and can be installed directly without separation.
②	Motor power cable	Connect the motor power cables to the U/V/W terminals on the drive side and the PE grounding terminal. For the motor power cables, see *"Table 1–1 " on page 13*.
③	Rear cover	Used to protect the motor.
④	Motor eyebolt	Used to connect the hoisting device.
⑤	Motor stator	The stator and rotor are supplied together and can be installed directly without separation.

Table 1–1 Description of power cables

Terminal	Color	Screw	Cable lug specifications (PCS)
U	Blue	M4	2 x 4S
V	Black	M4	2 x 4S
W	Red	M4	2 x 4S
PE	Yellow/Green	M4	2 x 4S

Caution

When the motor power cable is connected to the drive, make sure that the three-phase cables are matched. Otherwise, the motor will be damaged.

1.3 Product Dimensions

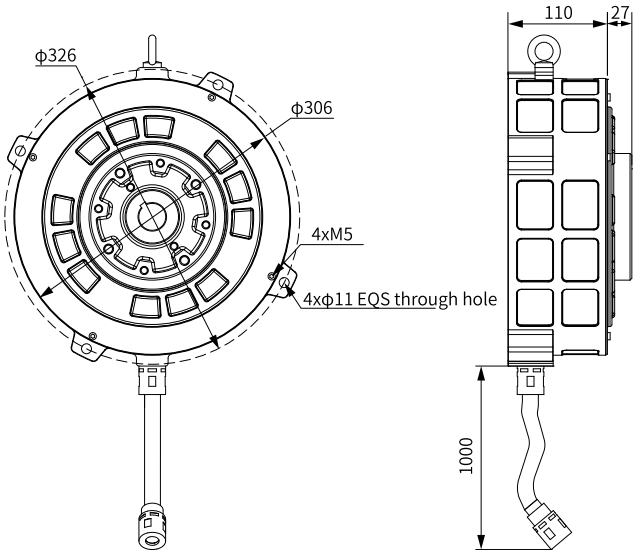

Figure 1-4 Product dimensions (in mm)

Table 1–2 Motor weight

Model	Weight (kg)
MX3-50C70B-INT	31.5
MX3-50C10C-INT	31.5
MX3-45C80B-INT	24.65

2 Product Specifications

2.1 Mechanical Characteristics

Item	Description
Duty type	S1
Excitation mode	Permanent magnet
Energy efficiency level	Level 1 (GB 30253-2013)
Installation mode	Flange
Storage temperature	-40°C to +60°C
Ambient temperature	0°C to 40°C
Storage humidity	＜ 95% RH (without condensation)
Ambient humidity	＜ 95% RH (without condensation)
Vibration resistance	49 m/s^2
Insulation resistance	500 VDC, 1s, insulation resistance ⩾ 50 MΩ
Insulation voltage	2160 VAC, 1s
Stator core protection	High-strength potting glue is used for sealing protection. It features good thermal conductivity and high IP rating against shock, corrosion, salty mist, and high temperature, ensuring long-term stable operation of the spindle in complex and harsh environments.
Direction of rotation	Rotates counterclockwise (CCW) when viewed from the load side upon normal power-on.
Product certification	CE/EAC

2.2 Electrical Specifications

Item	MX3-50C70B-INT	MX3-50C10C-INT	MX3-45C80B-INT
Rated power (kW)	4.5	4.5	4.5
Rated speed (rpm)	700	1000	800
Rated voltage (V)	380		
Rated torque (N·m)	54	43	53.7
Peak torque (N·m)	410	340	300
Frequency (Hz)	186.67	233.33	186.67
Rated current (A)	11.5	11.5	12.5
Insulation class	F		
Duty type	S1		

2.3 Torque-Speed Characteristics

MX3-50C70B-INT

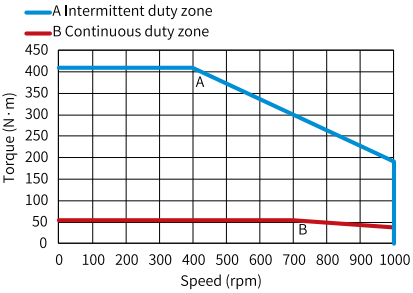

MX3-50C10C-INT

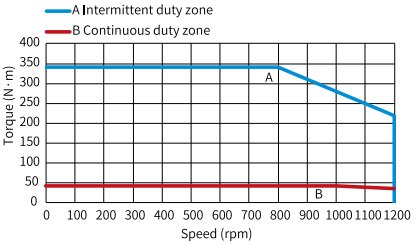

MX3-45C80B-INT

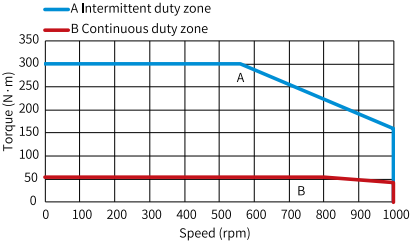

2.4 Altitude-based Derating Characteristics

No derating is required if the motor is used in altitudes below 1000 m. Derating is required for altitudes above 1000 m.

Altitude	1000 m	2000 m	3000 m	4000 m	5000 m
Derating percentage of the rated value	100%	94.7%	88.7%	82.4%	64.5%

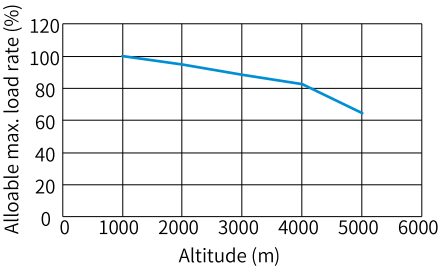

Figure 2-1 Altitude-based derating curve

2.5 Option

Adapter flange

Table 2–1 Adapter flange model selection

Model	Axial direction dimension (mm)	Inner hole dimension (mm)	Trial model	Additional accessories
MX3-F14435	35	144	Water jet weaving machine: 8100 Air jet weaving machine: 9100	-
MX3-F14335	35	143	Water jet weaving machine: 8100 Air jet weaving machine: 9100	-
MX3-F14445	45	144	Water jet weaving machine: 408	-
MX3-F14445-125	45	144 to 125	Water jet weaving machine: 851	A 125 mm transition loop and a 28 mm-long bottom block are required.
MX3-F14445-28	45	144	Water jet weaving machine: 851	A 28 mm-long bottom block is required.

Note

- The adapter flange needs to be adapted to the wall plate and actual bearing enclosure of the weaving machine. For initial use, contact the technical engineer of Inovance.
- The adapter flange of standard scheme has no lint-proof function. It is recommended to use lint-proof adapter flange for air jet weaving machines. For details, consult the technical engineer of Inovance.

Air jet spacer

An air jet spacer (model: MX3-D7) is required for the air jet weaving machines.

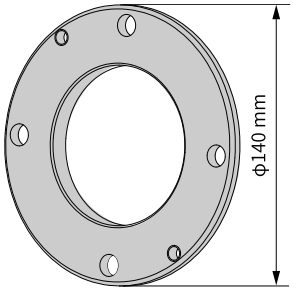

Figure 2-2 Outline diagram of the air jet spacer

Note

When using the air jet spacer for the first time, contact the technical engineer of Inovance for support.

Inertia disk

An inertia disk (model: MX3-G0618) can be installed to reduce the adverse impact on equipment operations.

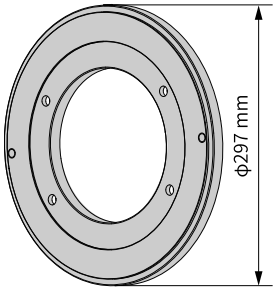

Figure 2-3 Appearance

Note

When using the inertia disc for the first time, contact the technical engineer of Inovance for support.

Auxiliary tooling

To ensure coaxiality consistency between the adapter flange and the taper part of the weaving machine crankshaft, it is recommended to use the second generation auxiliary tooling components for the weaving machines during installing the adapter flange.

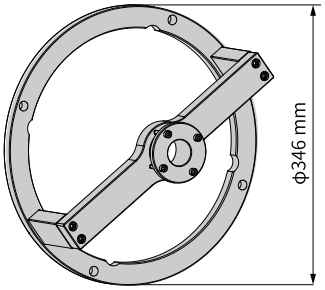

Figure 2-4 Outline diagram of auxiliary tooling

2.6 Servo System Configuration

System	Product configuration
Air jet weaving machine electric control system	MX3 electric spindle motor + TAJ300-Q7
Water jet weaving machine electric control system	MX3 electric spindle motor + TWJ300-A6
	MX3 electric spindle motor + TWJ300-A5
Super-start AC drive system	MX3 electric spindle motor + ITD500E

3 Installation Guidance

3.1 Fundamental Safety Instructions



- The motor contains permanent magnetic material, which can generate a strong magnetic field and magnetic attraction force in the surrounding around an open motor. Operators with a pacemaker or metal object embedded in the body cannot operate on an open motor.
- Motor installation and other operations must be performed only by qualified professionals.
- Do not use damaged cables or cables with damaged insulation. Do not touch the exposed parts of the cables.



- Keep the clocks and magnetizable memory (such as disks and credit cards) away from the motor. Failure to comply may result in damage.
- Avoid mechanical collision and beat on the motor shaft. Otherwise, the motor operation performance can be affected.
- Use spare parts approved by the manufacturer.
- Prevent foreign objects from entering the motor. Failure to comply may cause motor operation fault or damage.
- Use qualified lifting equipment with sufficient load-carrying capacity to lift or transport the motor.
- Do not connect the motor to an industrial power supply directly. Failure to comply can damage the motor.

3.2 Installation Flowchart

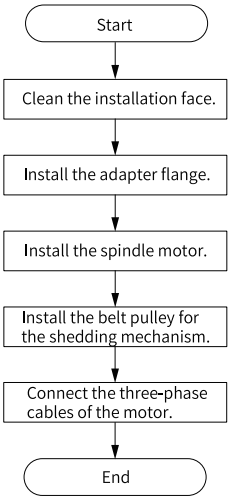

Figure 3-1 Installation procedure of the motor

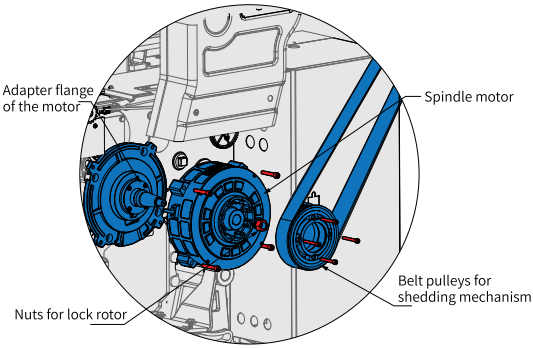

Figure 3-2 Main components of the motor

Note

- Whether to install the belt pulley for shedding mechanism depends on the actual working conditions and needs of textile mills. If you do not need to use this belt pulley, there is no need for you to install it. The operation of the equipment will not be affected.
- The motor adapter flange can be made by the equipment factory, but it must be jointly designed with the technical engineer of Inovance.

3.3 Preparation Before Installation

Requirements on the installation environment

Item	Requirement
Altitude	Max. 5000 m Derating is required only for altitudes above 1000 m. For details, see *"2.4 Altitude-based Derating Characteristics" on page 16*.
Ambient temperature	0°C to 40°C, with air temperature change < 0.5°C/min; Derating is required for temperatures above 40°C.
Storage temperature	-40°C to +60°C
Storage humidity	< 95% RH (without condensation)
Ambient humidity	< 95% RH (without condensation)
Stator core protection	High-strength potting glue is used for sealing protection. It features good thermal conductivity and high IP rating against shock, corrosion, salty mist, and high temperature, ensuring long-term stable operation of the spindle in complex and harsh environments.
Vibration resistance	Below 49 m/s^2
Installation location	Install the motor in a place that meets the following requirements: • a. Free from direct sunlight • b. Free from corrosive and inflammable gases and combustible materials, such as the hydrogen sulfide, chlorine, ammonia, sulphur gas, chloridize gas, acid, soda and salt • c. Away from heating sources such as a heating stove. • d. Away from places that exposed to explosion. Do not use the motor in an enclosed environment. This might lead to motor overtemperature and shorten its service life.

Installation tools

Protective equipment and tools	Requirement	Remarks
Anti-hit safety shoes	1 pair/person	Safety protection
Gloves	1 pair/person	-
Safety helmet	1 helmet/person	Safety protection
Hoisting equipment	1 piece	Hoisting weight: ⩾ 40 kg
Internal hexagonal wrench	1 set	Used to tighten M5 to M12 screws.
Monkey spanner	1	Used to tighten M20 nuts.
Run-out dial gauge	1 piece	Used to check the mounting accuracy of the adapter flange and the crank shaft.

Protective equipment and tools	Requirement	Remarks
Torque wrench	1 set	Confirm the tightening torque for screws and screw fasteners.
Loctite 222 threadlocker or other brands with the same performance	1 bottle	Used for tightening thread joints. You can use other brands of the same performance instead.
Filler gauge	1	After the motor is installed, check whether the minimum air gap of the stationary rotor meets the requirements.
Caliper	1	Used to detect whether the iron core end face of the stator is misaligned.
Auxiliary tooling	1 set	Used as an auxiliary tool for installing the adapter flange.

Mounting screws

- **Recommended models**

Table 3–1 Recommended tightening screws

Screw model	Length (mm)	Quantity	Remarks
M10	20	4	Inertia plate locking screw
	65	4	Enclosure mounting screw
M12	45	4	Adapter flange screw (8100 models, 9100 models)
	55	4	Adapter flange screw (408 models)
	45	3	Adapter flange screw (851 model + 28 mm stack)
	80	1	

Note

The screws in the table above are recommended. The actual length of screws depends on the actual condition of the equipment.

- **Recommended tightening torque**

  The following table lists the recommended tightening torque of the screw fasteners, which is applicable to installation of the motor and the connection between the motor and flange.

Table 3–2 Recommended tightening torque

Nominal diameter of the thread (mm)	Property class								
	12.9			10.9			8.8		
	Yielding load	Initial tightening force	Tightening torque	Yielding load	Initial tightening force	Tightening torque	Yielding load	Initial tightening force	Tightening torque
	kgf	kgf	kgf·cm	kgf	kgf	kgf·cm	kgf	kgf	kgf·cm
M3 x 0.5	563	394	17	482	338	15	328	230	10
M4 x 0.7	983	688	40	842	589	34	573	401	23
M5 x 0.8	1590	1113	81	1362	953	69	927	649	47
M6 x 1	2251	1576	138	1928	1349	118	1313	919	80
M8 x 1.25	4099	2869	334	3510	2457	286	2390	1673	195
M10 x 1.5	6496	4547	663	5562	3894	567	3787	2651	386
M12 x 1.75	9442	6609	1160	8084	5659	990	5505	3853	674
M14 x 2	12880	9016	1840	11029	7720	1580	7510	5257	1070
M16 x 2	17584	12039	2870	15056	10539	2460	10252	7176	1670
M18 x 2.5	21504	15053	3950	18413	12889	3380	12922	9045	2370
M20 x 2.5	27440	19208	5600	23496	16447	4790	16489	11542	3360
M22 x 2.5	33936	23755	7620	29058	20340	6520	20392	14274	4580
M24 x 3	39536	27675	9680	33853	23697	8290	23757	16630	5820

- **Reference dimensions of the countersunk holes and screw holes of the hexagon bolt**

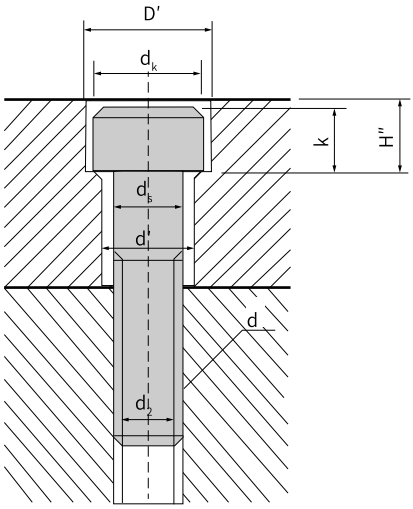

Figure 3-3 Reference dimensions of the countersunk holes and screw holes of the hexagon bolt

Table 3–3 Recommended tightening torque

Nominal diameter (d) of the thread (mm)	M3	M4	M5	M6	M8	M10	M12	M14	M16	M18	M20	M22	M24	M27	M30
d_s	3	4	5	6	8	10	12	14	16	18	20	22	24	27	30
d'	3.4	4.5	5.5	6.6	9	11	14	16	18	20	22	24	26	30	33
d_k	5.5	7	8.5	10	13	16	18	21	24	27	30	33	36	40	45
D'	6.5	8	9.5	11	14	17.5	20	23	26	29	32	35	39	43	48
k	3	4	5	6	8	10	12	14	16	18	20	22	24	27	30
H"	3.3	4.4	5.4	6.5	8.6	10.8	13	15.2	17.5	19.5	21.5	23.5	25.5	29	32
d_2	2.6	3.4	4.3	5.1	6.9	8.6	10.4	12.2	14.2	15.7	17.7	19.7	21.2	24.2	26.7

3.4 Installation Method

1. Clean the mounting face: mounting face of the weaving machine, crankshaft taper part of the weaving machine, adapter flange mounting face, motor enclosure mounting face, and motor shaft mounting taper face.
2. Install the adapter flange.
   a. Install the adapter flange in the bearing chamber of the weaving machine. Tighten the four adapter flange screws and apply a proper amount of thread tightening glue.

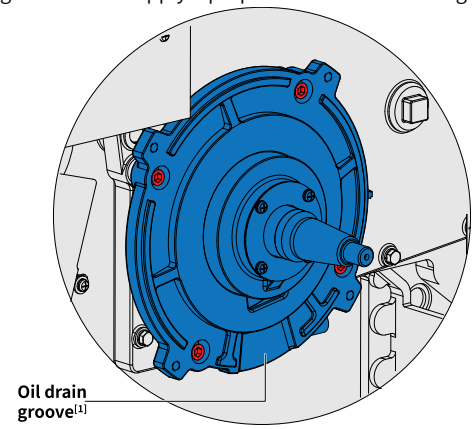

Figure 3-4 Installation diagram of the adapter flange

Caution

- [1] The oil drain groove on the adapter flange is used to detect oil leakage on the bearing block of the crankshaft, preventing the lubricating oil from being accumulated at the motor end. If you need to use a home-made adapter flange, this home-made adapter flange must be designed with an oil drain groove. Ensure that the oil drain groove is installed vertically and downwards during installation.
- The length of the locking screw of the adapter flange needs to be selected according to the actual conditions of the equipment. For model selection, see *"Table 3–1 " on page 23*.
- See GB 11334-2005 tolerance level AT6 for taper tolerance of the crankshaft. Failure to comply may lead to unstable operation of the equipment.

b. Check the mounting accuracy of the adapter flange with a run-out dial gauge.
Adjust the run-out dial gauge based on face A, place the pointer onto the spigot of the adapter flange, and rotate the crankshaft by one turn. The run-out value of adapter flange spigot must be < 0.08 mm.

Adjust the run-out dial gauge based on face B, place the pointer onto the crankshaft of the weaving machine, and rotate the crankshaft by one turn. The run-out value of the crankshaft must be < 0.04 mm.

If the above requirements are not met, perform fine-tuning again. Failure to comply may cause the rotor to collide with the stator, leading to mal-operation of the motor.

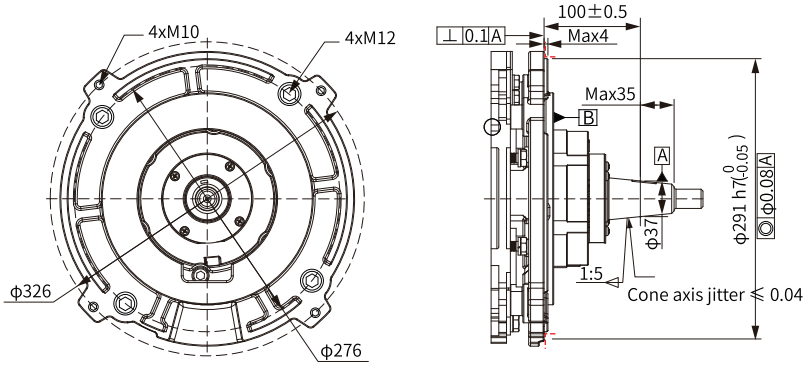

Figure 3-5 Mounting accuracy of the adapter flange (unit: mm)

Caution

To ensure the installation accuracy, prevent the red dotted part shown in the adapter flange installation diagram from being painted.

Note

Contact Inovance technical engineers for installation of the adapter flange in the lint-proof solution.

3. Install the electric spindle motor.
   a. Install the 7 x 28 mm woodruff key (8 mm woodruff key needs an adapter) in the taper part of the crankshaft.
   b. Alignment key: Use a lifting device to slowly install the motor shaft into the weaving machine spindle and align the keyway of the motor to the woodruff key of the taper part of the weaving machine.

Caution

- During installation, do not subject the waterproof connector on the motor cable outlet to any force.
- The motor drain wire terminals must be oriented toward the weaving machine control cabinet/drive side.

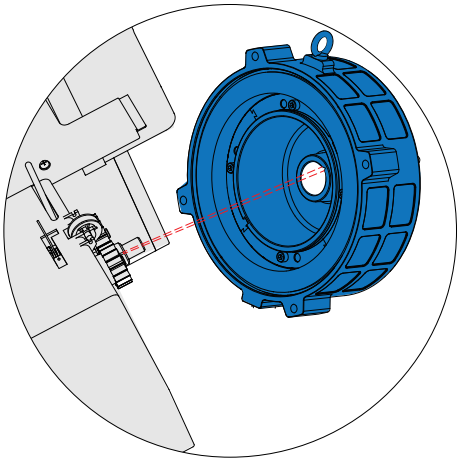

Figure 3-6 Alignment of the keyway

c. Tighten the four M10x65 hexagon bolt shown by ① in the following figure with the tightening torque specified in *"Table 3–2 " on page 24* to lock the stator assembly of the motor.
Fix the motor rotor to the spindle of the weaving machine with a M20 flat washer and spring washer, as shown by ② in the following figure.

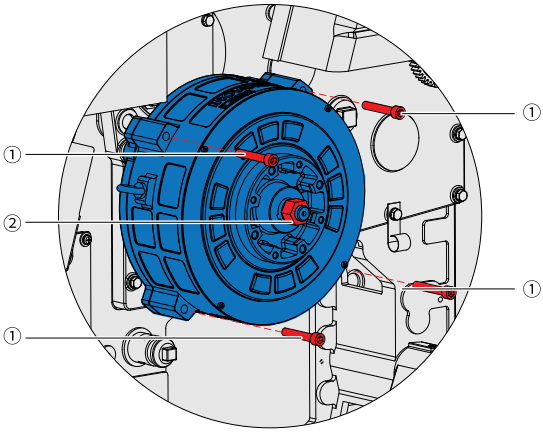

Figure 3-7 Position of the tightening nut

Note

- The recommended property class of the screws used during motor installation is 8.8.
- The thread glue must be applied when you install M20 nuts and fixing screws to the spindle motor.
- After installing the nut, it is recommended to use a 215 N·m (class 8 nuts) wrench for confirmation.
- Apply a proper amount of Loctite 222 (or a similar) to the thread mating part of the locking screws and the locking nuts to prevent loosening.
- The color of the screws (①) and nuts (②) shown in the preceding figure is for demonstration only.

d. Adjust the air gap of the motor stator/rotor. The air gap of the stator/rotor on one side must be higher than 0.3 mm.
Insert a 0.3 mm feeler gauge into the clearance of the stator/rotor. Make sure that the feeler gauge can be rotated completely for one revolution. Otherwise, adjust it with a slice.

Adjustment method: If the air gap at the 12 o'clock position does not meet the requirements, insert a slice into the junction part of the motor enclosure and adapter flange at the 6 o'clock position, then make adjustment accordingly until the filler gauge can pass through the clearance between the motor stator/rotor. After adjustment is done, install the tightening screws and apply thread tightening glue.

e. Post-installation inspection

- Check whether the tightening screws are tightened as required. For tightening requirements, see *"Table 3–2 " on page 24*.
- Use a caliper to detect the displacement of the iron core end face of the stator/rotor. If the displacement value of the stator/rotor is higher than 3 mm, check whether the adapter flange model matches the equipment.
- After installation is done, rotate the rotor manually without power-on. Check that no obvious stall occurs during rotation. If motor is stalled, it may be caused by the absorption of foreign objects or failure to meet the required flange assembly accuracy. In this case, re-install the motor according to the preceding procedure. For the disassembly procedure, see *" Disassembly Instructions" on page 36*.

f. Secure the rear cover of the motor with four M5x10 hexagon bolts. Apply thread tightening glue to the screws.

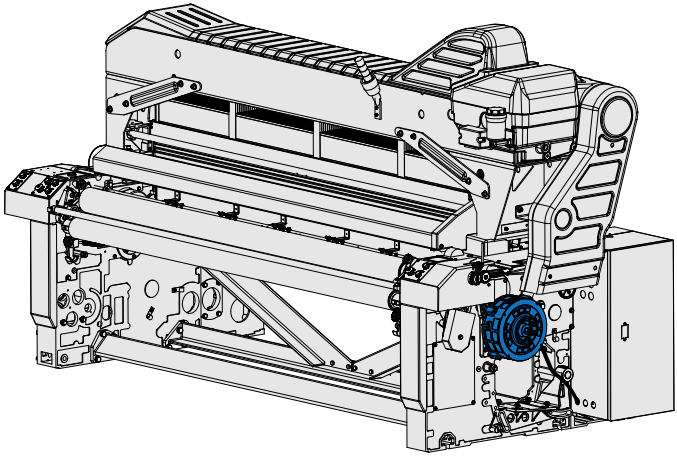

Figure 3-8 Motor and adapter flange installed properly

4. Install the belt pulley for the shedding mechanism.

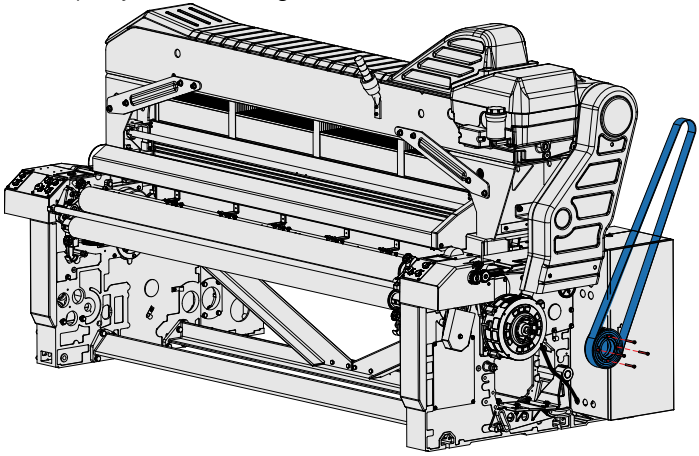

Figure 3-9 Installing the belt pulley for the shedding mechanism

The following shows what is looks like after installation is done.

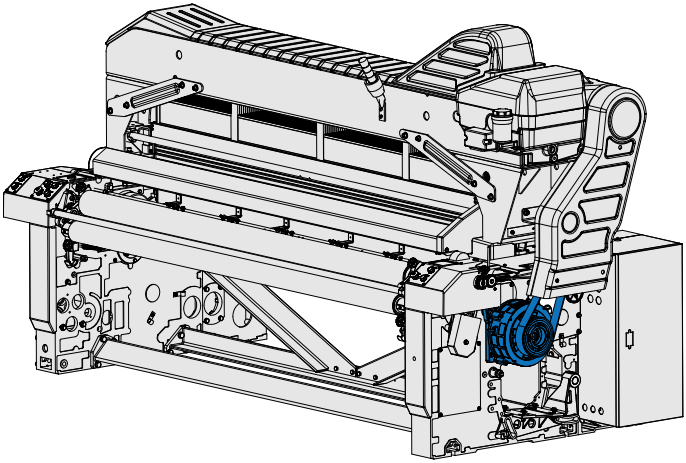

Figure 3-10 Overview of the equipment

5. Connect the three-phase motor cable to the drive side.
   When connecting the motor power cables to the drive side terminals, ensure that the three-phase cables are connected properly. Failure to comply can result in motor damage. For pin assignment of the power cable, see *"Table 1–1 " on page 13*.

Caution

- Ensure that the motor grounding cable is grounded properly.
- The motor is bearingless. Do not use a drive to drive the motor before the motor is installed to the equipment.

4 Commissioning and Operation

4.1 Commissioning Precautions

Danger

- The motor contains permanent magnetic material, which can generate a strong magnetic field and magnetic attraction force in the surrounding around an open motor. Operators with a pacemaker or metal object embedded in the body cannot operate on an open motor.
- The commissioning operations can be performed by qualified professionals only.
- Do not use damaged cables or cables with damaged insulation. Do not touch the exposed parts of the cables.
- When the motor is running, the surface temperature is high. Do not touch the surface of the motor to avoid burns.

Caution

- When the motor power cable is connected to the drive, make sure that the three-phase cables are matched, otherwise the motor will be damaged.
- Ensure the motor grounding cable is properly grounded.
- Keep the motor speed within the maximum speed range.

4.2 Inspection Before Commissioning

- Check whether the servo drive model matches the spindle motor.
- Check that the motor wiring and servo drive wiring are correct before operation.
- Check the control signals and observe related requirements during wiring.
- Check the motor specifications on the nameplate before operation.

Para. No.	Meaning	Description
F1.01	Rated motor power	Indicates the rated motor power displayed on the motor nameplate.
F1.02	Rated motor voltage	Indicates the rated motor voltage displayed on the motor nameplate.
F1.03	Rated motor current	Indicates the rated motor current displayed on the motor nameplate.

Para. No.	Meaning	Description
F1.04	Rated motor frequency	Indicates the rated motor frequency displayed on the motor nameplate.
F1.05	Rated motor speed	Indicates the rated motor speed displayed on the motor nameplate.

Note

When using ITD500E series spindle drive with MX3 series motor, there is no need to set parameters in group F1. You only need to check whether the parameters displayed on the drive are consistent with those on the motor nameplate.

4.3 Commissioning Procedure

The following shows the commissioning procedure for ITD500E series spindle drive.

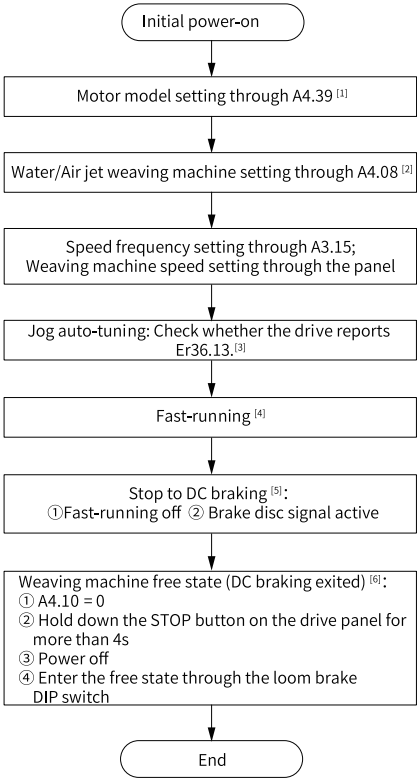

Figure 4-1 Quick commissioning flowchart

- [1] Set A4.39 to 3 when a 5.0 kW 700 rpm motor is used. Set A4.39 to 4 when a 5.0 kW 1000 rpm motor is used. Set A4.39 to 7 when a 4.5 kW 800 rpm motor is used.
- [2] Set A4.08 to 3 for air jet weaving machines or to 5 for water jet weaving machines.
- [3] Check whether the drive reports Er36.13 fault during jog auto-tuning. If Er36.13 is reported, see ITD500E Series AC Drive User Guide for details.
- [4] Run the weaving machine at a fast speed. Pay attention to whether the startup performance is good, whether the speed fluctuates reasonably, and whether the cloth surface has a mark. Observe whether the overshoot occurs on the weaving machine upon stop. Perform jog at any angle to observe whether slip occurs.
- [5] When the ITD500E series spindle drive for external weaving machines is equipped with a third-party electronic control system, it can stop to DC braking through the brake disc signal in the control cabinet or stop to DC braking through the stop button on the operating panel of the drive.
- [6] Free state of weaving machine (DC braking exited): 1. Set A4.10 to 0; 2. Press and hold the STOP key on the operating panel of the drive for more than 4s; 3. Power off; 4. Enter the free state through the brake DIP switch of the weaving machine.

5 Maintenance

Item	Frequency
For air jet weaving machine, the lint inside and outside of the motor must be cleared.	Once every 30 days (the cleaning frequency can be increased according to the actual situation.)
Check the tightness of the screws and nuts of the spindle motor and the adapter flange.	Once every 30 days



For air jet weaving machines, if the lint is not cleaned in time, a fire accident may occur.

6 Disassembly Instructions

Danger

- The motor contains permanent magnetic material, which can generate a strong magnetic field and magnetic attraction force in the surrounding around an open motor. Operators with a pacemaker or metal object embedded in the body cannot operate on an open motor.
- Only qualified professionals can perform operations such as motor disassembly.
- Do not touch the exposed parts of the cable.

Caution

- Keep the clocks and magnetizable memory (such as disks and credit cards) away from the motor. Failure to comply may result in damage.
- Avoid mechanical collision and beat on the motor shaft. Otherwise, the motor operation performance can be affected.
- Use qualified lifting equipment with sufficient load-carrying capacity to lift or transport the motor.

Disassembly flow chart

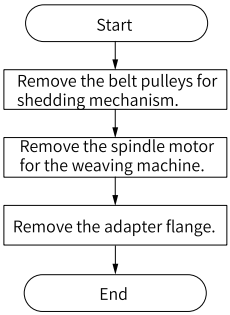

Figure 6-1 Disassembly flow chart

Disassembly tools

Protective equipment and tools	Requirement	Specifications/Remarks
Anti-hit safety shoes	1 pair/person	Safety protection
Gloves	1 pair/person	-
Safety helmet	1 helmet/person	Safety protection
Hoisting equipment	1 piece	Hoisting weight: 30 kg to 40 kg
Internal hexagonal wrench	1 set	Used to remove M5 to M12 screws.
Monkey spanner	1	Used to remove the M20 nuts.
Auxiliary disassembly tooling	1	Used as an auxiliary tooling for disassembling the motor.

Disassembly mode

1. Disassemble the belt pulley used by the shedding mechanism.
2. Disassemble the spindle motor of the weaving machine.
   a. Use a lifting device to lift the motor through an eyebolt to prevent the motor from dropping suddenly after the screws/nuts are removed.
   b. Remove the M20 nut that used to fix the spindle and motor shaft.
   c. Remove the four M10x65 screws from the enclosure and adapter flange.
   d. Use the auxiliary disassembly tooling to make the tip be against the crankshaft end face, and then lock the screws on both ends to the shaft. Rotate the tip to separate the motor shaft from the crankshaft. In this case, the rotor assembly part will be attracted to the stator assembly. Keep rotating the tip until the spigot on the stator assembly enclosure is separated from the spigot on the adapter flange. Remove the motor with a lifting device.
3. Remove the four locking screws on the adapter flange and remove the adapter flange.



During the disassembly, handle with care to avoid damage to the weaving machine shaft head or motor.

Copyright © Shenzhen Inovance Technology Co., Ltd.

PS00017754A00

Shenzhen Inovance Technology Co., Ltd.

www.inovance.com

Add.: Inovance Headquarters Tower, High-tech Industrial Park,
Guanlan Street, Longhua New District,
Shenzhen 518000, P.R. China
Tel: (0755) 2979 9595 Fax: (0755) 2961 9897

Suzhou Inovance Technology Co., Ltd.

www.inovance.com

Add.: No. 52, Tian E Dang Road, Wuzhong District, 215104,
Suzhou City, Jiangsu Province, P.R. China
Tel: (0512) 6637 6666 Fax: (0512) 6285 6720