INOVANCE

Advancing industrial technology,
for a better world



ES810 Series
Servo Drive (Multi-drive System)

User Guide

Industrial Automation | New Energy Vehicle | Intelligent Elevator | Intelligent Robot | Digital Energy | Rail Transit

Data code PS00017743A02

Legal Information

Copyright

Copyright © Shenzhen Inovance Technology Co., Ltd. 2024. All rights reserved.

This documentation is the exclusive property of Shenzhen Inovance Technology Co., Ltd. No individual or entity may excerpt, reproduce, modify, translate, or distribute any content herein without written consent from Inovance.

Legal action will be taken against infringement.

Trademarks

INOVANCE is a registered trademark of Shenzhen Inovance Technology Co., Ltd. and its affiliated companies. All other trademarks or registered trademarks mentioned in this documentation are the property of their respective owners. Unauthorized use of these trademarks by third parties for any purpose without written authorization could violate the rights of their owners.

Disclaimer of Liability

Due to continuous updates and improvements of products and technologies, the content of this documentation may not fully match the actual products. In the event of any discrepancies, the actual products shall prevail.

The contents are subject to change without notice due to product upgrade.

Waste Disposal

Storage, use, and disposal of this product (including optional accessories) must comply with local laws and regulations.

Qualified Personnel

The product/system described in this documentation may be operated only by personnel qualified for the specific task in accordance with the relevant documentation, in particular its warning notices and safety instructions. Qualified personnel can identify the risks of the product/system and prevent possible dangers.

Proper Use of the Product

Proper transportation, storage, assembly, installation, commissioning, operation, and maintenance are required to ensure the safe operation of the product without any problems. The required ambient conditions must be met. All operations must follow the guidelines provided in this documentation.

Preface

Introduction

Thank you for purchasing the ES810 series servo drive.

The ES810 servo drive (multidrive system) is Inovance's new generation low-voltage multidrive system with power ranging from 2.2 kW to 126 kW. It is a common bus drive system consisting of a rectifier unit and multiple servo drives. Supporting EtherCAT communications, the ES810 allows networked operation of multiple servo drives when used together with a host controller, meeting the drive requirements for single-unit mechanical equipment with multiple drive points or continuous production line systems. In addition, it optimizes process control for all-electric injection molding machines, such as the control on injection speed and pressure holding precision. It also provides functions of stiffness table settings and inertia auto-tuning for easy use. By working with a low-inertia or medium-inertia high-response servo motor, the ES810 can implement rapid and accurate position, speed, and torque control. The ES810 applies to automation equipment such as plastic molding machines, semi-conductor manufacturing equipment, SMT machines, PCB punching machines, handling machineries, food processing machineries, machine tools, and transmission machineries.

This guide describes the safety information, instructions for mechanical and electrical installation, and basic commissioning and maintenance of the product.

More documents

Document	Code	Description
ES810 Series Servo Drive (Multidrive System) User Guide	PS00017743	Presents safety information, mechanical and electrical installation, and basic commissioning and maintenance instructions. **Note**: This guide includes information on the ES810 rectifier unit and inverter unit.

Revision history

Date	Version	Revision
August 2026	A02	**Added:** Added *"15.1 Certification and Standard Compliance" on page 374* and sub-sections. **Revision:** • Updated the wiring content in *"1.1 General Safety Instructions" on page 11*. • Added protection categories and short circuit rated values in *"2.4.1 Rectifier Unit" on page 22* and *"2.4.2 Inverter Unit" on page 23*. • Updated *"4.3.1 Rectifier Unit" on page 46*and *"4.3.2 Inverter Unit" on page 47*, and added the product weight column. • Updated *"3.3 Unpacking and Transportation" on page 34* and added unpacking inspection figures and operation steps. • Updated *"10.1.2 Routine Checklist" on page 245* and *"10.1.3 Periodic Inspection Checklist" on page 246*, and changed the judgment items to declarative sentences. • Updated *"5.8 Grounding" on page 93* and the fundamental safety instructions. • Updated *"11.1 List of Options" on page 254* and changed the external LCD operating panel model to SOP-20-810.
September 2025	A01	**Added:** • Added "Legal Information" section (*" Legal Information" on page 1*). • Added "Industrial Information Security" section (*"1.2 Industrial Information Security" on page 16*). • Added "Service and Support" section (*" Service and Support" on page 381*). **Revision:** • Updated *"2.1.1 Rectifier Unit" on page 17*. Added model description figures and updated optional function component descriptions. • Updated section "Rectifier Unit" (*"2.3.1 Rectifier Unit" on page 20*). Deleted the 300-mm water-cooled product dimensions.
February 2025	A00	First release.

Access to the guide

This guide is not delivered with the product. You can download the PDF version in the following ways:

- Visit *https://www.inovance.com/global*, and choose **Service&Support > Support > Documentation Download**.
- Scan the **QR code** on the product with your smartphone.
- Scan the QR code below to install **My Inovance** app, where you can search for and download the guide.



Warranty disclaimer

Inovance provides warranty service within the warranty period (as specified in your order) for any fault or damage that is not caused by improper operation of the user. Maintenance will be charged after the warranty expires.

Within the warranty period, maintenance can be charged for the following product damage:

- Damage caused by operations not following the instructions in the guide
- Damage caused by fire, flood, or abnormal voltage
- Damage caused by using the product for unintended functions
- Damage caused by using the product outside the specified scope
- Damage or secondary damage caused by force majeure (natural disaster, earthquake, and lightning strike)

When applicable, relevant maintenance fee will be charged according to the latest Price List of Inovance. If otherwise agreed upon, the agreed terms and conditions shall prevail.

For details, see the Warranty Card.

Table of Contents

Legal Information 1

Preface 1

1 Fundamental Safety Instructions 11

1.1 General Safety Instructions 11

1.2 Industrial Information Security 16

2 Product Information 17

2.1 Description of Nameplate and Model 17

2.1.1 Rectifier Unit 17

2.1.2 Inverter Unit 18

2.2 Product Model List 19

2.3 Components 20

2.3.1 Rectifier Unit 20

2.3.2 Inverter Unit 21

2.4 Technical Specifications 22

2.4.1 Rectifier Unit 22

2.4.2 Inverter Unit 23

2.5 System Composition 26

2.6 System Model Selection 27

2.6.1 Precautions for System Selection 27

2.6.2 System Selection Flowchart 28

2.6.3 Load and Motor Selection 28

2.6.4 Inverter Unit Selection 29

2.6.5 Rectifier Unit Selection 29

2.6.6 System Combination and Arrangement 29

3 Installation Precautions 32

3.1 Installation Flowchart 32

3.2 Preparations Before Installation 32

3.2.1 Requirements on Installation Personnel 32

3.2.2 Installation Environment Requirements 33

3.2.3 Installation Direction 34

3.3 Unpacking and Transportation 34

3.4 Cabinet Design 37

3.4.1 Clearance Requirements 37

3.4.2 Mounting Backplate Design Requirements 37
3.4.3 Cabinet Cooling Design Requirements 39
4 Mechanical Installation 45
4.1 Safety Precautions 45
4.2 Pre-installation Inspection 45
4.3 Installation Dimensions 46
4.3.1 Rectifier Unit 46
4.3.2 Inverter Unit 47
4.4 Installation Method 49
4.4.1 Rectifier Unit 49
4.4.2 Inverter Unit 54
4.4.3 Removing/Installing the Cover 58
4.4.3.1 Rectifier Unit 58
4.4.3.2 Inverter Unit 60
4.4.4 Cabinet-mount Installation 61
4.4.4.1 Precaution 61
4.4.4.2 Installation Method 62
5 Electrical Installation 66
5.1 Safety Precautions 66
5.2 EMC Wiring Precautions 66
5.2.1 Typical Wiring Example 66
5.2.2 Use of the EMC Filter 67
5.3 Wiring Precautions 69
5.4 Pre-wiring Inspection 69
5.5 System Wiring Diagram 71
5.6 Main Circuit Wiring 72
5.6.1 Rectifier Unit 72
5.6.1.1 Main Circuit Cables of the Rectifier Unit 72
5.6.1.2 Layout and Description of the Rectifier Unit Terminals 73
5.6.2 Inverter Unit 75
5.6.2.1 Main Circuit Cables of the Inverter Unit 75
5.6.2.2 Layout and Description of the Inverter Unit Terminals 76
5.7 Control Circuit Wiring 77
5.7.1 Rectifier Unit 77
5.7.1.1 Control Circuit Cables of the Rectifier Unit 77
5.7.1.2 Layout and Description of the Rectifier Unit Terminals 78

5.7.1.3 Wiring of the Rectifier Unit Control Circuit 81
5.7.2 Inverter Unit 84
5.7.2.1 Control Circuit Cables of the Inverter Unit 84
5.7.2.2 Layout and Description of the Inverter Unit Terminals 85
5.7.2.3 STO Wiring and PG Expansion Card 87
5.7.2.4 Wiring of the Inverter Unit Control Circuit 89
5.8 Grounding 93
5.9 EtherCAT Communication Connection 97
5.10 Connecting the Rectifier Unit and Inverter Unit 97
5.11 Connecting the Inverter Unit to the Motor 100
5.12 Post-Wiring Inspection 104
6 Commissioning Tool 105
6.1 Operating Panel 105
6.1.1 Component Description 105
6.1.2 Rectifier Unit 107
6.1.2.1 Viewing and Modifying Parameters 107
6.1.2.2 Parameter View 108
6.1.3 Inverter Unit 113
6.1.3.1 Panel Display 113
6.1.3.2 Parameter Setting 117
6.1.3.3 Password Settings 117
6.1.3.4 JOG Trial Running 118
6.1.3.5 DIDO Function 119
6.2 InoDriveShop Software 119
6.2.1 Creating/Loading Items 120
6.2.2 Connecting/Disconnecting Communication 120
6.2.3 Opening Parameter File 121
6.2.4 Continuous Oscilloscope 122
6.2.5 Waveform Analyzer 123
6.2.6 Trigger Setting 123
6.2.7 Parameter Monitoring 123
6.2.8 Parameter List 123
7 Commissioning and Operation 125
7.1 Basic Setting 125
7.1.1 Drive Setting Flowchart 125
7.1.2 Pre-operation Inspection 125

7.1.3 Power-on 126
7.1.4 Setting the Optical Encoder 126
7.1.5 Jog 126
7.1.6 Direction of Rotation 126
7.1.7 Operation Enable 127
7.1.8 Stop Modes 132
7.1.9 Conversion Factor Setting 137
7.2 Servo Status Setting 139
7.2.1 State Description 139
7.2.2 Control Word 6040h 142
7.2.3 Status Word 6041h 142
7.3 Servo Mode Setting 143
7.3.1 Introduction to Operation Modes 143
7.3.2 Mode Switchover 145
7.3.3 Communication Cycles Supported By Each Operation Mode 145
7.4 Cyclic Synchronous Velocity (CSV) Mode 146
7.4.1 Control Block Diagram 146
7.4.2 Related Objects 146
7.4.3 Related Function Setting 148
7.4.4 Recommended Configuration 148
7.5 Homing (HM) Mode 148
7.5.1 Control Block Diagram 148
7.5.2 Related objects 149
7.5.3 Related Function Setting 150
7.5.4 Recommended Configuration 151
7.6 Motor Protection Function 151
7.7 Use of the Absolute Value System 154
7.7.1 Descriptions of Absolute Value System 154
7.7.2 Precautions for Using the Absolute System Battery Box 162
8 Communication 163
8.1 Rectifier Unit 163
8.1.1 Parameter Communication Address 163
8.1.1.1 Introduction to Parameters 163
8.1.1.2 Description of Parameter Communication Address 163
8.1.1.3 Modbus-Specific Parameter Communication Address 164
8.1.2 Modbus Communication 166
8.1.2.1 Modbus Communication Protocol 166

8.1.2.2 Networking....167
8.1.2.3 Terminal Descriptions....167
8.1.2.4 Communication Performance....167
8.1.2.5 Related Parameter Setting....168
8.1.2.6 Communication Data Frame Structure....169
8.2 Inverter Unit....171
8.2.1 Introduction To EtherCAT Protocol....171
8.2.2 Networking....173
8.2.3 Terminal Description....173
8.2.4 Communication Performance....174
8.2.5 Related Parameter Setting....175
8.2.6 EtherCAT Communication Basis....175
8.2.7 Introduction To CiA402 Control....183
9 Troubleshooting....185
9.1 General Safety Instructions....185
9.2 Rectifier Unit....185
9.2.1 Fault Display and Solutions....185
9.2.2 List of Fault Codes....186
9.3 Inverter Unit....191
9.3.1 Fault and Alarm Severity Levels....191
9.3.2 List of Fault Codes....192
9.3.3 List of Alarm Codes....211
9.3.4 SDO Transfer Abort Codes....212
9.3.5 Solutions To Faults....213
9.3.6 Solutions To Alarms....240
9.3.7 Communication Fault Recovery Mode....243
10 Routine Maintenance....245
10.1 Daily Maintenance Items....245
10.1.1 Routine Cleaning Items....245
10.1.2 Routine Checklist....245
10.1.3 Periodic Inspection Checklist....246
10.2 Components Replacement....248
10.2.1 Maintainable Parts....248
10.2.2 Replacing the Cooling Fan....248
11 List of Options....254
11.1 List of Options....254

11.2 External Power Terminals of Common Bus 254
11.3 Through-hole Mounting Bracket and Backplate Cut-out Dimensions 255
11.4 Air Guide Plate 255
11.5 Shield Bracket 256
11.6 External LCD operating panel 256
11.7 Instructions for Braking Component Model Selection 257
11.7.1 Selecting the Resistance of the Braking Resistor 257
11.7.2 Braking Resistor Power Selection 257
11.7.3 Braking Component Model Selection 258
11.7.4 Outline and Mounting Dimensions of the Braking Unit 259
11.7.5 Outline and Mounting Dimensions of the Regenerative Unit 259
11.8 Instructions for Peripheral Electrical Component Model Selection 261
11.8.1 Recommended AC Input Breakers and Contactors 261
11.8.2 Instructions for Cable Lug Model Selection 262
11.8.3 Selection of the AC Input Reactor 265
11.8.4 Selection of the External EMC Filter 268
12 Appendix A: Inverter Unit Parameters 273
12.1 Object Group 1000h 273
12.2 Object Group 6000h 278
12.3 Object Group 2000h 286
12.3.1 H00 Servo Motor Parameters 286
12.3.2 H01 Drive Parameters 287
12.3.3 H02 Basic Control Parameters 290
12.3.4 H03 Terminal Input Parameters 293
12.3.5 H04 Terminal Output Parameters 298
12.3.6 H05 Position Control Parameters 300
12.3.7 H06 Speed Control Parameters 305
12.3.8 H07 Torque Control Parameters 308
12.3.9 H08 Gain Parameters 310
12.3.10 H09 Auto-tuning Parameters 313
12.3.11 H0A Fault and Protection Parameters 315
12.3.12 H0B Monitoring Parameters 316
12.3.13 H0C Communication Parameters 319
12.3.14 H0D Auxiliary Function Parameters 320
12.3.15 H0E Error and Stop Parameters 321
12.3.16 H11 Multi-Position Parameters 329

12.3.17 H12 Multi-Reference (Speed) Parameters 336
12.3.18 H15 Mold-Open/Close Parameters 339
12.3.19 H18 Ejector Pin Parameters 342
12.3.20 H19 Hydraulic Pressure Control Parameters 344
12.3.21 H1A Hydraulic Pressure Control Parameters 347
12.3.22 H1B Overload Test Parameters 349
13 Appendix B: Rectifier Unit Parameters 351
13.1 F0 Basic Rectifier Parameters 351
13.2 F1 Basic Function Parameters 351
13.3 F2 Information Exchange Between Rectifier and Inverter 353
13.4 F4 Input Terminals 354
13.5 F5 Output Terminals 355
13.6 FA Fault Log 355
13.7 FD Communication Parameters 359
13.8 FP User Password 360
13.9 AF Process Data Address Mapping 361
13.10 U0 Monitoring Parameters 362
14 Appendix C: Dual-Screw Synchronous Solution 364
14.1 Background of the Solution 364
14.2 Dual-Screw Synchronization Solution 364
14.3 Procedure 365
14.4 Control Logic 370
14.5 Parameters Related to Dual-Screw Synchronization 373
15 Requirements for Certification and Standards Compliance 374
15.1 Certification and Standard Compliance 374
15.2 CE Certification 374
15.2.1 Precautions for Compliance with EU Standards 374
15.2.2 Requirements for Compliance with EMC Directive 375
15.2.3 Requirements for Compliance with LVD 376
15.3 UL/cUL Certification 377
15.4 STO Functional Safety Certification 379
15.5 KC Certification 379
16 Service and Support 381

1 Fundamental Safety Instructions

1.1 General Safety Instructions

Safety disclaimer

- This chapter provides essential safety instructions for proper use of the product. Before using this product, read through the guide and comprehend all the safety instructions. Failure to comply with the safety instructions may result in death, severe injury, or equipment damage.
- "DANGER", "WARNING", and "CAUTION" signs in this guide are only supplements to the safety instructions, and do not reflect all safety instructions to be followed.
- Use this product according to the designated environment requirements. Damage caused by improper use is not covered by warranty.
- Inovance shall take no responsibility for any personal injury or property damage caused by improper use.

Safety levels and definitions



Indicates that failure to comply with the notice can result in death or severe personal injury.



Indicates that failure to comply with the notice may result in severe personal injury or death.



Indicates that failure to comply with the notice may result in minor or moderate injury or equipment damage.

General Safety Instructions

- Drawings in the guide are sometimes shown without covers or protective guards. Install the covers or protective guards as specified, and then perform operations in accordance with the instructions.
- The drawings in the guide are shown for illustration only and may be different from the product you purchased.
- Operators must take mechanical protection measures to protect their safety. For example, they must wear safety shoes, safety clothing, safety glasses, protective gloves and sleeves, or other protective equipment.

Unpacking



- Do not install the product in the case of any damage, rust, or signs of use on the product or accessories upon unpacking.
- Do not install the product in the case of water seepage into the product or missing or damaged components upon unpacking.
- Do not install the product in the case of any discrepancy between the product you received and the product name on the packing list.



- Check whether the packing is intact and whether there is damage, water seepage, dampness, and deformation before unpacking.
- Unpack the package layer by layer. Do not strike the package violently.
- Check for damage, rust, or dents on the surfaces of the product and accessories upon unpacking.
- After unpacking, check the contents against the packing list to ensure that the equipment and accessories are in the correct quantities, and that all documentation is complete.

Storage and transportation



- Large or heavy equipment must be handled by qualified professionals using specialized hoisting equipment. Failure to comply could result in personal injury or equipment damage.
- Before hoisting the equipment, ensure that components such as the front cover and terminal blocks are secured firmly with screws. Loosely connected components may fall off and result in personal injury or equipment damage.
- Do not stand or stay below the product which is being hoisted.
- When hoisting the equipment with a steel rope, ensure the equipment is hoisted at a constant speed without suffering from vibration or shock. Do not turn the equipment over or let the equipment stay hanging in the air. Failure to comply could result in personal injury or equipment damage.



- Handle the equipment with care and mind your step during transportation to prevent personal injury or equipment damage.
- When carrying the equipment with bare hands, hold the equipment casing firmly with care to prevent parts from falling. Failure to comply could result in personal injury.
- Store and transport the equipment based on the storage and transportation requirements. Failure to comply could result in equipment damage.
- Do not store or transport the equipment in locations where the equipment may be exposed to splashing water or rain, direct sunlight, strong electric field, strong magnetic field, or strong vibration.
- Store the equipment for up to three months. Take stricter protective measures and carry out the necessary inspections for a longer storage time.
- Pack the equipment securely and properly before transportation. Use a fully enclosed container for long-distance transportation.
- Do not transport the equipment with other devices or items that may impact or cause harm to the equipment.

Installation
DANGER • Ensure peripheral power distribution requirements are met, and select air switches, fuses, cables, and cable terminals correctly. • Use standard torque for screw fastening, and use appropriate terminal crimping tools for crimping terminals. • Ensure heat dissipation requirements are met and design inlet and outlet airflow duct properly. • Avoid environments with dripping water, conductive foreign objects (such as carbon fiber filaments, conductive metal dust, metal chips), and salt spray. **Failure to follow the above instructions will pose a fire risk.** • This equipment must be operated only by trained and qualified electrical personnel. Non-professionals must not operate this equipment.
WARNING • Read through the guide and safety instructions before installation. • Do not install this equipment in places with strong electric or magnetic field. • Before installation, check that the mechanical strength of the installation site can bear the weight of the equipment. Failure to comply may result in mechanical hazards. • Do not wear loose clothes or accessories during installation. Failure to comply may result in an electric shock. • When installing the equipment in an enclosed environment (such as a cabinet or case), use cooling devices (such as fans or air conditioners) to cool the space and meet the installation environment requirements. Failure to do so can result in equipment overtemperature or fire accidents. • Do not retrofit the equipment. • Do not fiddle with the bolts used to fix equipment components or the bolts marked in red. • When the equipment is installed in a cabinet or terminal device, appropriate guard devices (guards for fire, electrical, and mechanical protection) meeting applicable IEC standards and local laws and regulations must be provided. • Before installing devices with strong electromagnetic interference, such as a transformer, install a shielding device for the equipment to prevent malfunction. • Install the equipment onto an incombustible object such as a metal. Keep the equipment away from combustible objects. Failure to comply may result in a fire. **The edges of the equipment metal enclosure are sharp. Note the following precautions during installation to avoid personal injury or cable damage:** • When performing installation, handling, or maintenance operations, always wear cut-resistant gloves. • Avoid direct skin contact with enclosure edges and cut surfaces during operation.
Caution • Cover the top of the product with a piece of cloth or paper during installation. This is to prevent unwanted objects such as metal chippings, oil, and water from falling into the product and causing faults. After installation, remove the cloth or paper on top of the product to prevent over-temperature caused by poor ventilation due to blocked ventilation holes. • Resonance may occur when the equipment operating at a constant speed executes variable speed operations. In this case, install the vibration-proof rubber under the motor frame or use the vibration suppression function to reduce resonance.

Wiring

DANGER

- Equipment installation, wiring, maintenance, inspection, or parts replacement must be performed only by professionals.
- Before wiring, switch off all power supplies of the device. Wait for at least the time designated on the warning label before further operations because residual voltage still exists after power-off. After waiting for the designated time, measure the DC voltage in the main circuit to ensure the DC voltage is within the safe voltage range. Failure to comply can result in electric shock.
- Do not perform wiring, remove the equipment cover, or touch the circuit board and other exposed live parts with power on. Failure to comply can result in electric shock.
- Make sure that the equipment and product are grounded properly. Failure to comply can result in the risk of electric shock.

WARNING

- Do not connect the power cable to output terminals of the equipment or product. Failure to comply may cause equipment damage or even a fire.
- When connecting a drive with the motor, make sure that the phase sequences of the drive and motor terminals are consistent to prevent reverse motor rotation.
- Cables used must comply with corresponding cross-sectional area and shielding requirements. The shield of the shielded cable must be grounded at one end properly.
- Tighten the terminal screws with the torque specified in the user guide. Insufficient or excessive torque may cause overheating and damage to the joint, which could result in fire.
- After wiring is done, ensure that all cables are connected properly and no screws, washers or exposed cables are left inside the equipment. Failure to comply could result in electric shock or equipment damage.
- Avoid direct skin contact with enclosure edges and cut surfaces during operation.
- Route cables carefully during wiring. Avoid pressing them against sharp edges, which may cause squeezing or cutting. It is recommended to use protective sleeves or route cables away from such edges.
- If the enclosure has a protective film, remove it only after installation is completed and all work involving sharp edges has been finished.

Caution

- During wiring, follow the proper electrostatic discharge (ESD) procedures, and wear an antistatic wrist strap. Failure to comply may result in damage to the equipment or internal circuits.
- Use the shielded twisted pair cable to wire the control circuit, and connect the shield to the grounding terminal of the equipment. Failure to comply may result in equipment malfunction.

Power-on

DANGER

- Before power-on, check that the equipment is installed properly with reliable wiring and the motor can be restarted.
- Before power-on, make sure that the power supply meets equipment requirements to prevent equipment damage or even a fire.
- After power-on, do not open the cabinet door or protective cover of the equipment. Do not touch any terminals, or remove any part of the equipment at power-on. Failure to comply will result in an electric shock.

WARNING

- Perform a trial run after wiring and parameter setting to ensure that the equipment operates safely. Failure to comply may result in personal injuries or equipment damage.
- Before power-on, check that the rated voltage of the equipment is consistent with that of the power supply. Failure to comply may result in a fire. Using an incorrect supply voltage may cause a fire.
- Before power-on, check that no one is near the equipment, motor, or other mechanical parts. Failure to comply may result in personal injuries or even death.

Operation
 • The equipment must be operated only by professionals. Failure to comply can result in injury or death. • Do not touch any connecting terminals or disassemble any unit or component of the equipment during operation. Failure to comply could result in electric shock.
 • Do not touch the enclosure, fan, or resistor with bare hands. Failure to comply may result in burns. • Prevent metal or other objects from falling into the equipment during operation. Failure to comply may result in a fire or equipment damage.

Maintenance
 • Equipment installation, wiring, maintenance, inspection, or parts replacement must be performed only by professionals. • Do not maintain the equipment with power-on. Failure to comply may result in an electric shock. • Before maintenance, disconnect all the power supplies of the equipment and wait for at least the time specified on the warning label. • When using a permanent magnet (PM) motor, do not touch the motor terminals while the motor is rotating, because induced voltage may be present at the terminals even after the product is powered off. Failure to comply may result in electric shock.
 • Perform routine and periodic inspection and maintenance on the equipment according to maintenance requirements and keep a maintenance record.

Repair
 • Equipment installation, wiring, maintenance, inspection, or parts replacement must be performed only by professionals. • Do not repair the equipment with power-on. Failure to comply may result in electric shock. • Before inspection or repair, disconnect all the power supplies of the equipment and wait for at least the time specified on the warning label.
 • Submit a request for repair based on the warranty agreement. • When the fuse is blown or the circuit breaker or earth leakage current breaker (ELCB) trips, wait for at least the time specified on the warning label before power-on or other operations. Failure to comply may result in personal injury or death and equipment damage. • Troubleshooting and repair of a faulty or damaged equipment must be performed by professionals based on the repair instructions, with the repair records kept properly. • Replace quick-wear parts of the equipment according to the replacement instructions. • Do not use damaged equipment. Failure to comply could result in death, personal injury, or severe equipment damage. • Recheck the wiring and reset the parameters after equipment replacement.

Disposal
WARNING • Dispose of the retired equipment in accordance with applicable national regulations and standards. Failure to comply could result in property damage, personal injury, or death. • Recycle retired equipment in accordance with industry waste disposal standards to avoid environmental pollution.

Safety Label

To ensure safe operation, comply with safety labels on the equipment and do not damage or remove the labels. The following table describes the meanings of the safety labels.

Safety Label	Description
	• Before using the equipment, read the guide and safety precautions carefully. Failure to comply may result in personal injury, death, or equipment damage. • Do not touch the terminals or remove the cover with power-on or within 10 min after power-off. Failure to comply may result in electric shock.

1.2 Industrial Information Security

The product provides interfaces for network connection and data transmission. To protect factories, systems, machines, and networks from cyberattacks, it is essential to implement proper protection mechanism for industrial security.

Customers are responsible for providing and maintaining a secure connection between the product and their network or any other network to protect their factories, systems, machines, and networks from unauthorized access. Such systems or machines can be connected to an enterprise network or the Internet only when a secure connection is established and appropriate security measures (such as using antivirus software or installing firewalls) are in place.

Inovance continuously develops and improves its products and solutions to enhance safety. It is strongly recommended that you update the product promptly and always use the latest version.

Caution

Malware (such as viruses, Trojans, and worms) can bring the device into an unsafe operating state, resulting in death, serious injury, and property damage. Observe the following precautions:

- Always use the latest software version. If the product version is no longer supported or the latest version is not used, you will be exposed to increased risk of cyber attacks.
- Develop and maintain appropriate protective measures (including but not limited to antivirus software, firewalls, WAF, IPS/IDS, situational awareness system, identity authentication, and data encryption) to prevent the files in mobile storage devices from being damaged by malware, and to protect the products, networks, systems, and interfaces from unauthorized access, tampering, hacking, data leakage, or information theft.
- Check all safety-related interfaces and settings after commissioning.

2 Product Information

2.1 Description of Nameplate and Model

2.1.1 Rectifier Unit

Model

ES810 - 20M 4T 240 - 0 0
① ② ③ ④ ⑤ ⑥

① **Product name** ES810: Hydraulic servo series	④ **Rated output current** 056: 56 A 110: 110 A 240: 240 A 358: 358 A
② **Module type** 20M: Rectifier unit	⑤ **Component for optional functions** 0: Without built-in braking unit 1: With built-in braking unit
③ **Voltage class** 4T: Three-phase 380 V to 480 V	⑥ **Expansion component for optional functions** 0: Default

Nameplate information

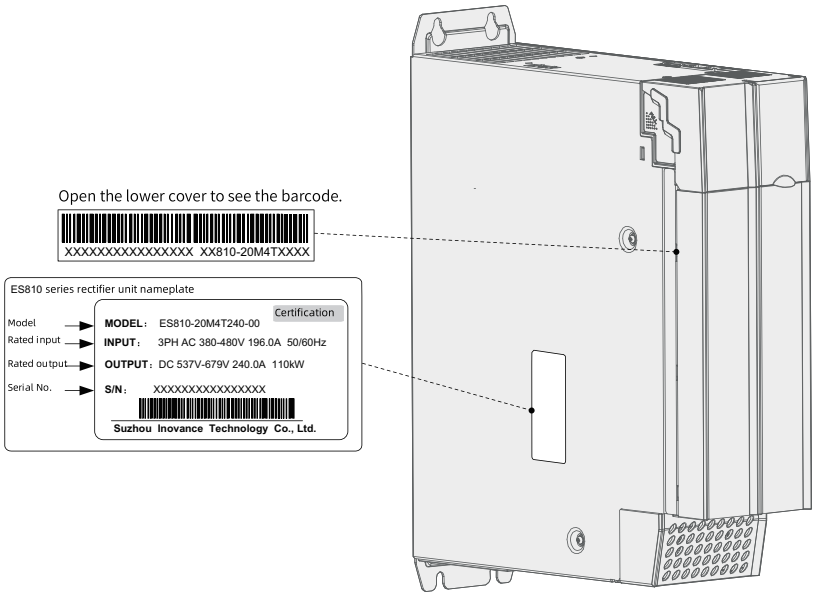

Note

The actual parameters, symbols, and other information are subject to the actual nameplate.

2.1.2 Inverter Unit

Model

ES810 - 50M 4T 025 - 2 0
① ② ③ ④ ⑤ ⑥

① **Product name** ES810: Hydraulic servo series	④ **Rated output current** …: … 025: 25 A …: … 112: 112 A …: …
② **Module type** 50M: Inverter unit	⑤ **Encoder type** 0: Resolver encoder 2: Weton 23-bit absolute encoder
③ **Voltage class** 4T: Three-phase 380 V to 480 V	⑥ **Inverter** 0: STO function

Nameplate information

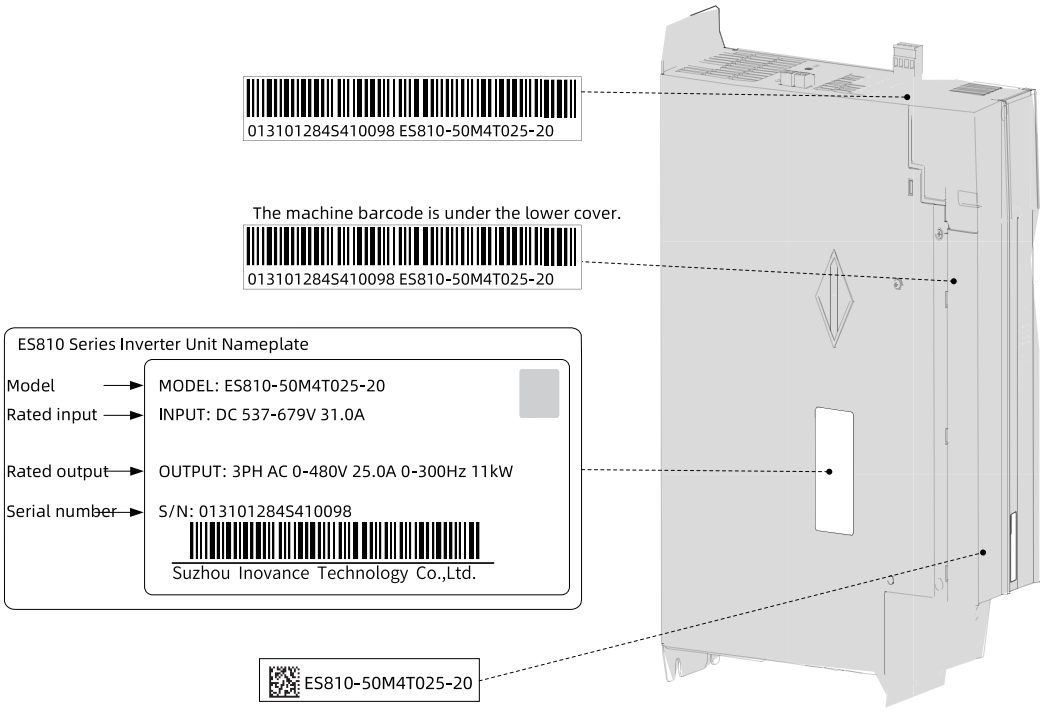

Note

The actual parameters, symbols, and other information are subject to the actual nameplate.

2.2 Product Model List

Category	Structure	Width	Power range	Product model
Rectifier unit	Booksize	50 mm	22 kW	ES810-20M4T056-10
		100 mm	45 kW	ES810-20M4T110-10
		200 mm	110 kW	ES810-20M4T240-00
		300 mm	160 kW	ES810-20M4T358-00
Inverter unit		50 mm	2.2 kW	ES810-50M4T005-20
			3.7 kW	ES810-50M4T009-20
			5.5 kW	ES810-50M4T013-20
		100 mm	7.5 kW	ES810-50M4T017-20
			11 kW	ES810-50M4T025-20
			15 kW	ES810-50M4T032-20
			18.5 kW	ES810-50M4T037-20
			22 kW	ES810-50M4T045-20
			30 kW	ES810-50M4T060-20
			37 kW	ES810-50M4T075-20
		200 mm	45 kW	ES810-50M4T091-20
			55 kW	ES810-50M4T112-20
			75 kW	ES810-50M4T150-20
		300 mm	105 kW	ES810-50M4T200-20
			126 kW	ES810-50M4T240-20

2.3 Components

2.3.1 Rectifier Unit

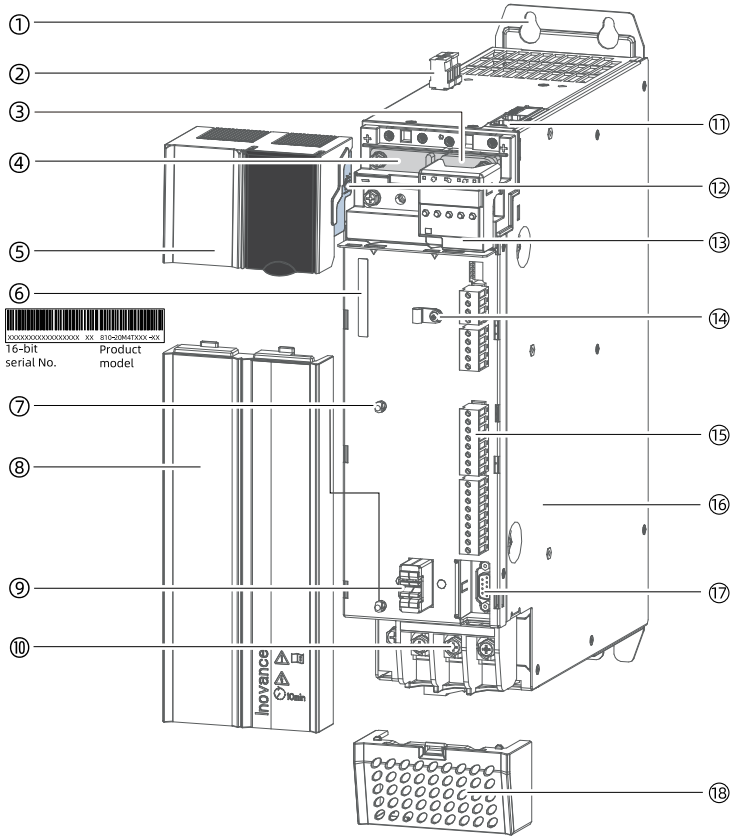

No.	Component
①	Mounting hole
②	24 V power input
③	Bonding busbar
④	Built-in busbar
⑤	Upper cover
⑥	Barcode
⑦	Cable tie
⑧	Lower cover
⑨	Cover snap-fit joint
⑩	R/S/T terminals
⑪	RJ45 (communication terminal)
⑫	Bus protective baffle
⑬	Operating panel
⑭	Grounding screw for the shield
⑮	Control terminal
⑯	Unit
⑰	DP communication DB9 terminal
⑱	Power terminal cover

2.3.2 Inverter Unit

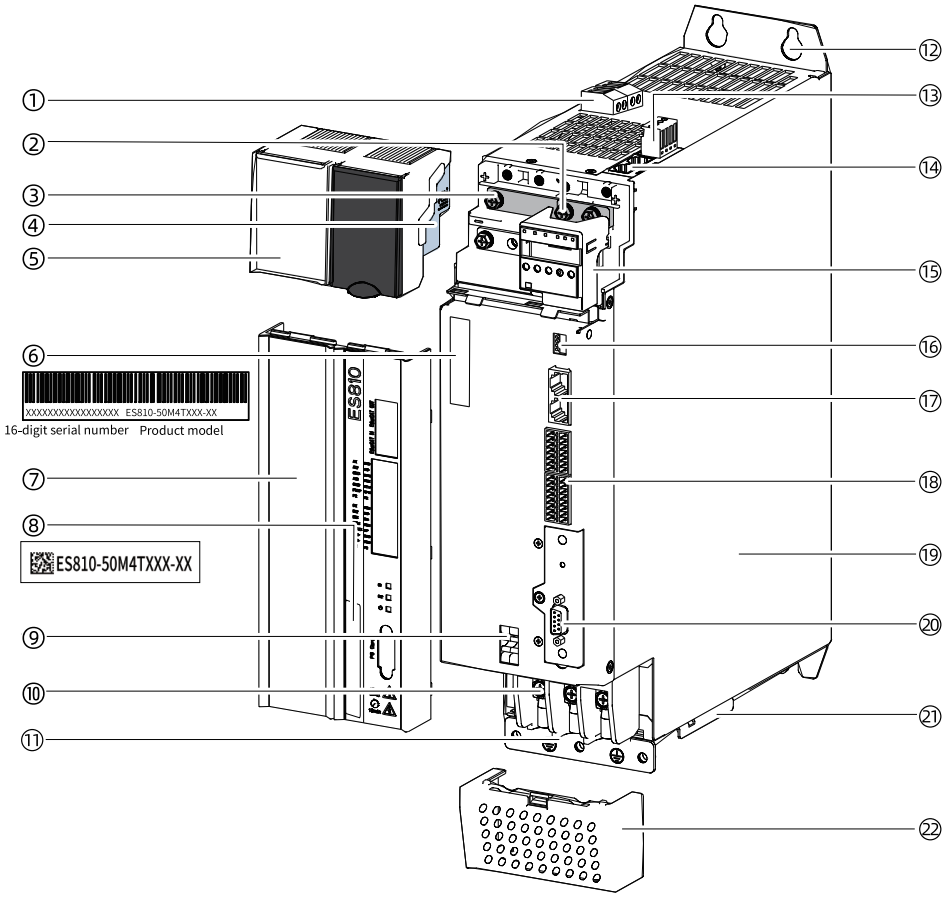

No.	Component
①	24 V power input
②	Bonding busbar
③	Built-in busbar
④	Bus protective baffle
⑤	Upper cover
⑥	Barcode
⑦	Lower cover
⑧	Product model and SN label
⑨	Cover snap-fit joint
⑩	U, V, and W terminals
⑪	Grounding terminal
⑫	Mounting hole
⑬	STO protective power input
⑭	RJ45 (internal bus) communication terminal
⑮	Operating panel
⑯	Termination resistor DIP switch for RS485/CAN communication
⑰	EtherCAT communication interface
⑱	Control terminal
⑲	Unit
⑳	PG card
㉑	Absolute encoder battery box
㉒	Power terminal cover

2.4 Technical Specifications

2.4.1 Rectifier Unit

Table 2–1 Parameter specifications of the rectifier unit

Rectifier unit model	Rated power (kW)	Power capacity (kVA)	Input AC current (A)	Output DC current (A)	Braking resistor		Braking unit	Current-carrying capacity (A)	Thermal power (W)
					Output power (kW)	Recommended resistance (Ω)			
Three-phase 380-480 VAC (operating range: 323-528 VAC); Output voltage: 537-679 VDC									
ES810-20M4T56-10	22	45	49	56	4	≥ 32	Built-in as option	100	176
ES810-20M4T110-10	45	81	89	107	5	≥ 16	Built-in as option	200	290
ES810-20M4T240-00	110	179	196	240	-	-	External MDBUN series as option	200	590
ES810-20M4T358-00	160	267	292	358	-	-	External MDBUN series as option	200	880

Table 2–2 Technical specifications of rectifier unit

Item		Specification
Basic data	Input voltage	Three-phase 380 VAC to 480 VAC (operational range: 323 VAC to 528 VAC)
Custom functions	Communication/ Bus	• Modbus-RTU protocol supported: maximum baud rate of 115200; 128 nodes, maximum distance of 1000 m • PROFIBUS-DP (model dependent) supported: baud rate of 12 Mbps, 32 nodes, maximum distance of 100 m • CANopen protocol supported: baud rate of 1 Mbps, 64 nodes, maximum distance of 40 m
HMI	DI and DO	5 common multi-functional inputs; programmable; isolated sink/ source input; operating voltage range: 9 V to 30 V; invalid voltage: < 5 V; input impedance: 3 kΩ; meeting the requirements for 100 Hz frequency input 3 relay outputs, programmable normally open (NO)/ normally closed (NC) contact
	Operating panel display	Standard 5-digit LED display, 5 keys
Protective functions	Providing protection against overtemperature, power supply phase loss, input three-phase voltage unbalance detection, overvoltage, braking circuit overcurrent, braking resistor short circuit, and braking transistor short circuit detection	

Table 2–3 Technical specifications of the rectifier unit

Item	Specification
Grid voltage	Three-phase 380 VAC to 480 VAC (operating range: 323 VAC to 528 VAC)
Power range	22 kW/45 kW/110 kW/160 kW
Grid type	TN, TT, and IT star-configured power systems
Input frequency	50 Hz/60 Hz
Braking	Through additional braking module and braking resistor
IP rating	IP20
Protection class	Class I

Item	Specification
Short circuit rating	• If the certification marks on the product nameplate contain UL certification, the short circuit rating is 100 kA. • If the certification marks on the product nameplate do not contain UL certification, the short circuit rating is 5 kA.
Cooling method	Fan cooling
Ambient temperature	• Operating temperature: -10℃ to +50℃, with temperature change rate lower than 0.5℃/min (Derating is required for temperatures above 40℃. For temperatures above 40℃ and lower than 50℃ (maximum temperature), derate 1.5% for every additional 1℃.) • Storage temperature: -25℃ to +70℃ • Transportation temperature: -25℃ to +70℃
Relative humidity	• Relative humidity variation: 5% to 95%. Standard models are not suitable for use in environments with corrosive gases. Select models with corrosion-resistant coated housing for such environments. • Relative humidity for storage: 5% to 95%. • Relative humidity for transportation: lower than 95% at +40℃
Altitude	≤ 1000 m: derating not required; 1000 m < altitude ≤ 3000 m: derated by 1% for every additional 100 m

2.4.2 Inverter Unit

Model: ES810-50M4Txxx-xx		005	009	013	017	025	032	037	045	060	075	091	112	150	200	240
Input	Input DC current (A)	7	12	17	22	31	40	46	55	73	90	105	129	172	233	276
	Input voltage	• Rated input voltage: 537 VDC to 679 VDC • Bus voltage range: 350 VDC to 800 VDC														
Output	Output AC current (A)	5	9	13	17	25	32	37	45	60	75	91	112	150	200	240
	Carrier frequency	• Rated carrier frequency: 4 kHz 7-segment pulsing • Carrier frequency range: 2kHz to 8 kHz														
	Output voltage	0 VAC to 480 VAC														
	Output frequency	0 Hz to 300 Hz														
Heat dissipation	Thermal power (W)	59	76	127	155	249	294	343	425	526	669	817	1033	1379	1570	1875
	Air exhaust flow (CFM)	10	10	10	37	37	40	55	65	65	65	72	136	138	140	220
Weight (kg)		4.1			6.8			7.4	9.2		9.9	16.4	17.8	18.8	24	25
IP rating		IP20														
Protection class		Class I														
Short circuit rating		• If the certification marks on the product nameplate contain UL certification, the short circuit rating is 100 kA. • If the certification marks on the product nameplate do not contain UL certification, the short circuit rating is 5 kA.														

<table>
<tr><td colspan="2">Model:
ES810-50M4Txxx-xx</td><td>005</td><td>009</td><td>013</td><td>017</td><td>025</td><td>032</td><td>037</td><td>045</td><td>060</td><td>075</td><td>091</td><td>112</td><td>150</td><td>200</td><td>240</td></tr>
<tr><td colspan="2">Overload capacity</td><td colspan="15"><table><tr><td>Overload ratio</td><td>150%</td><td>180%</td><td>200%</td><td>250%</td></tr><tr><td>Overload duration</td><td>80s</td><td>45s</td><td>30s</td><td>10s</td></tr></table>• Note 1: Values in the preceding table are the minimum values obtained at a carrier frequency of 4 kHz, an ambient temperature of 40°C, and an output frequency of 100 Hz.
• Note 2: After an overload fault occurs, wait for 1 min and then start the drive.
• Note 3: Contact the technical support of the drive manufacturer for the overload duration at low-speed operation.</td></tr>
<tr><td colspan="2">MTBF (h)</td><td colspan="15">558744 h
Note: MTBF (Mean Time Between Failures) is one of the indicators used to measure product reliability. The above MTBF values are theoretical values and are applicable only to the estimation of maintenance costs and spare parts.</td></tr>
<tr><td rowspan="6">Speed/ Torque control mode</td><td>Speed change rate</td><td colspan="15">• Load change rate at the rated speed: 0.5% at 0% to 100% load
• Voltage change rate at the rated speed: 0.5% at rated voltage ± 10%
• Temperature change rate at the rated speed: ±0.5% at (25±25)℃</td></tr>
<tr><td>Speed control range</td><td colspan="15">1:5000 (Under the rated torque load, the drive keeps running as long as the lower limit of the speed control range is not exceeded.)</td></tr>
<tr><td>Frequency</td><td colspan="15">300 Hz</td></tr>
<tr><td>Torque control accuracy (repeatability)</td><td colspan="15">±2%</td></tr>
<tr><td>Speed reference input</td><td colspan="15">EtherCAT and parameter inputs</td></tr>
<tr><td>Torque reference input</td><td colspan="15">EtherCAT and parameter inputs</td></tr>
</table>

Model: ES810-50M4Txxx-xx		005	009	013	017	025	032	037	045	060	075	091	112	150	200	240
Built-in functions	Overtravel (OT) prevention	The drive decelerates to stops when P-OT and N-OT are activated.														
	Electronic gear ratio	0.001 to 4000														
	Protective functions	Providing protection against overcurrent, overvoltage, undervoltage, overload, main circuit detection error, heatsink overtemperature, output phase loss, overspeed, encoder error, CPU error, and parameter error														
	LED display	• Main power CHARGE indicator • 5-digit display on the operating panel														
	Analog monitoring function	Built-in AO1 terminal for observing the speed and torque reference signals														
	Device connection	EtherCAT														
	Communication protocol	EtherCAT, CoE														
	Description	Status display, user parameter setting, monitored value display, alarm tracing display, and speed and torque reference signals														
	Other functions	Gain tuning, alarm log, and jog														

2.5 System Composition

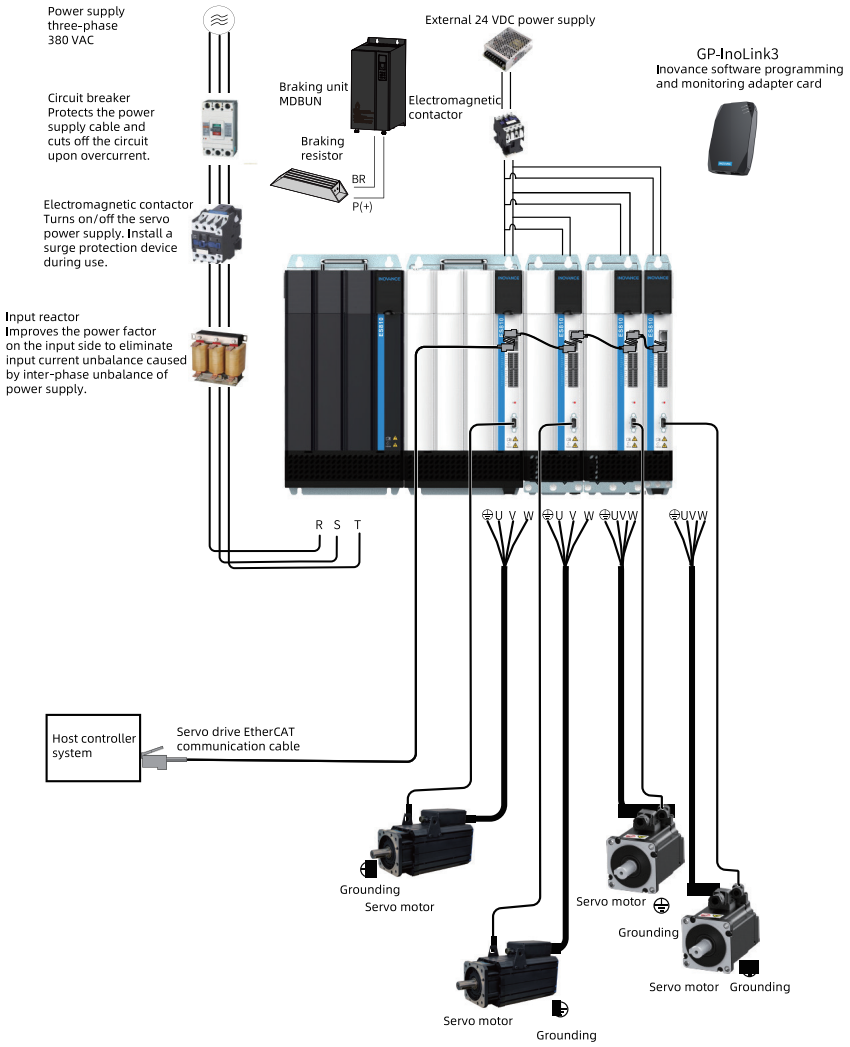

Figure 2-1 Wiring example of a three-phase 380 V system

The drive is directly connected to an industrial power supply, with no isolation such as a transformer. A fuse or a circuit breaker therefore must be connected to the input power supply to prevent electric shocks in the servo system. The servo drive is not configured with the built-in protective grounding circuit. For the sake of safety, install a residual current device (RCD) to provide protections against overload and short circuit or a specialized RCD to protect the grounding cable. Do not use an electromagnetic contactor to start or stop the servo motor. As a high-inductance device, the motor may generate transient high voltage that may break down the contactor.

When connecting an external power supply to the control circuit or a 24 VDC power supply, pay attention to the power capacity as insufficient power capacity will lead to insufficient supply current, resulting in failure of the servo drive or the brake. This is especially true when the power supply is used to power up multiple servo drives or brakes. The brake shall be powered up by a 24 VDC power supply. The power must match the motor model and meets the brake requirements.

2.6 System Model Selection

2.6.1 Precautions for System Selection

Caution

- When the bus current is excessively high and the DC busbar current-carrying capacity cannot meet the requirements, common bus external power terminals must be selected.
- Common bus external power terminals must be selected during dual-tier arrangement.
- For ordering information about common bus external power terminals, see *"11.2 External Power Terminals of Common Bus" on page 254*.
- The current-carrying capacity of the DC busbar of all models of the ES810 series rectifier unit is 200 A.
- For installation and model selection of the ES810 series inverter unit, see . *"2.4.2 Inverter Unit" on page 23*
- Only rectifier units with the same power rating can be connected in parallel. The maximum number of parallel rectifier units cannot exceed four. If more than four rectifier units are needed, select rectifier units with a higher power rating.

2.6.2 System Selection Flowchart

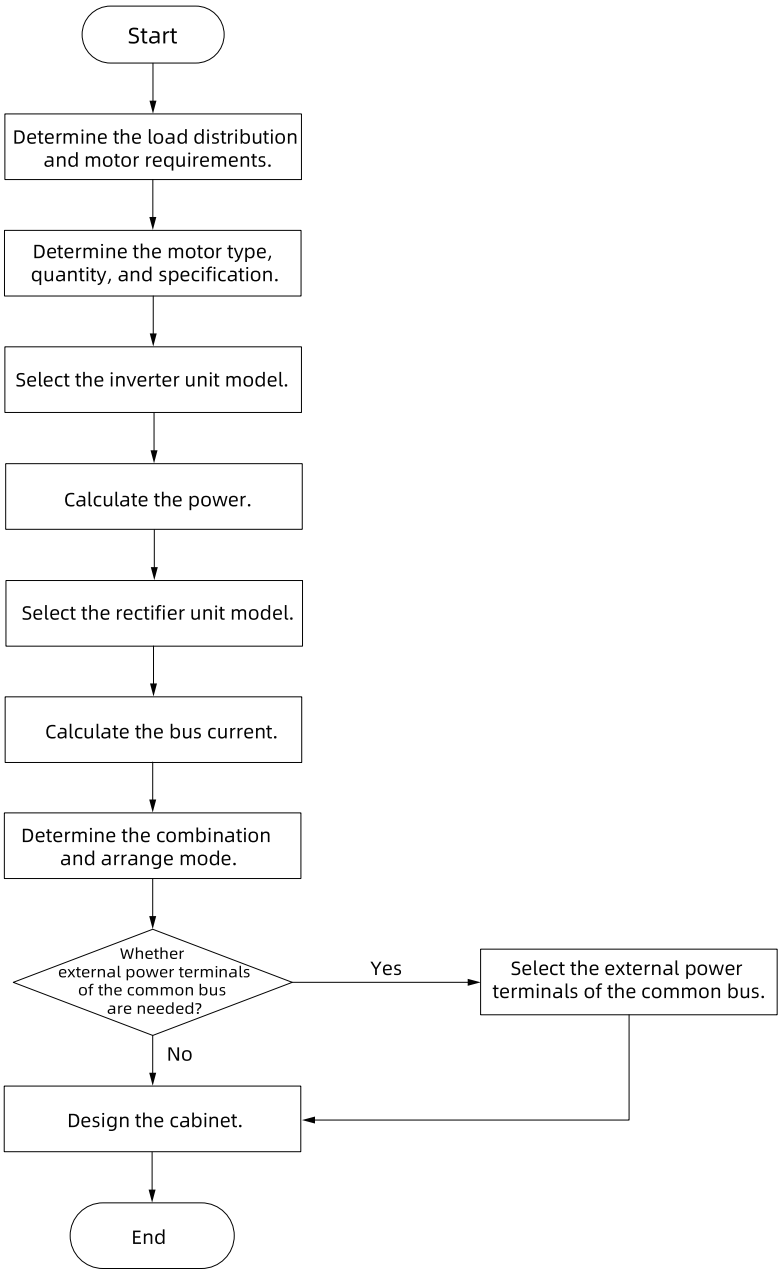

2.6.3 Load and Motor Selection

1. Determine the motor type and quantity according to the load and operation mode of the mechanical device.
2. Determine the mechanical device requirements on the motor, including the power, torque, speed, startup, speed regulation, braking, overload, heating, and temperature rise.
3. Select the rated power, rated voltage, and rated speed of the motor in the motor product catalog.
4. Select the motor capacity on the premise that the motor can meet the requirements of the mechanical device load.

$$P_n = \sqrt{3} \times U_n \times I_n \times \cos\theta \times \eta$$

P_n – Rated power; U_n – Rated voltage; I_n – Rated current; cosθ – Power factor; η – Efficiency.

2.6.4 Inverter Unit Selection

1. Determine the inverter unit quantity according to the motor quantity. One motor needs one inverter unit.
2. Select the power and model of the inverter unit according to the rated power of the motor.
3. For power and model selection of the ES810 series inverter unit, see *"2.4.2 Inverter Unit" on page 23*.

2.6.5 Rectifier Unit Selection

1. Calculate the sum of the rated power of all selected inverter units.
2. The power of the rectifier unit must be greater than or equal to 80% of the sum of the rated power of all inverter units.

$$P \geq 80\% (P1 + P2 + P3 + P4 + P5 + ...)$$

where P is the power of the rectifier unit and P1, P2, P3, P4, and P5 are the rated power of inverter units.

3. Select a rectifier unit model based on *"2.4.1 Rectifier Unit" on page 22*. When one rectifier unit cannot meet the power requirements, you can connect multiple rectifier in parallel.

Note

- In general, the configuration factor of the rectifier unit and the inverter unit is 80%. When the requirement for the equipment overload capacity is high, the configuration factor needs to be adjusted to 100% to 150%; when the requirement for the equipment overload capacity is low, the configuration factor can be adjusted to 60% to 80%.
- Only rectifier units with the same power rating can be connected in parallel. The maximum number of parallel rectifier units cannot exceed four.

2.6.6 System Combination and Arrangement

The ES810 series product supports single-tier or dual-tier installation, and the rectifier unit can be installed in the middle or on the left side of the inverter unit.

Single-tier installation

If the cabinet has enough space, it is recommended to install units on a single tier, with the rectifier unit placed on the left or in the middle. The following table describes the typical arrangement modes of single-tier installation.

Arrangement mode	Example	Bus current calculation
Rectifier unit placed on the left	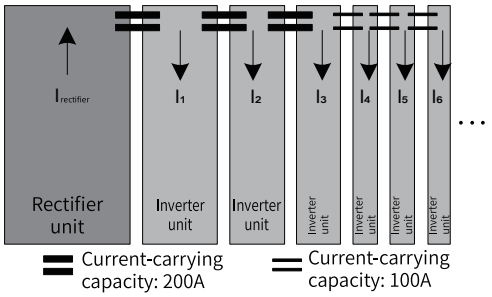	I rectifier ≥ 80% (I 1 + I 2 + I 3 + I4 + I5 + I6 + ...) I 1 + I 2 + I 3 + I4 + I5 + I6 + ... ≤ 200 A I 4 + I 5 + I 6 +...≤ 100 A
Rectifier unit placed on the left (Common bus external terminal)	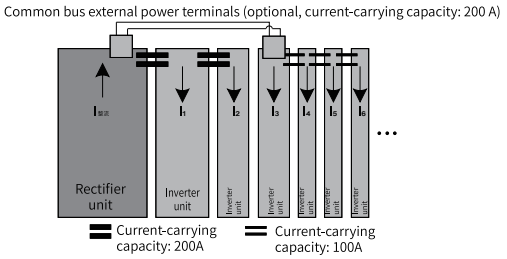	I rectifier ≥ 80% (I 1 + I 2 + I 3 + I4 + I5 + I6 + ...) I 1 + I2 ≤ 200 A I 3 + I 4 + I 5 + I 6 +...≤ 200 A I 4 + I 5 + I 6 +...≤ 100 A
Rectifier unit placed in the middle	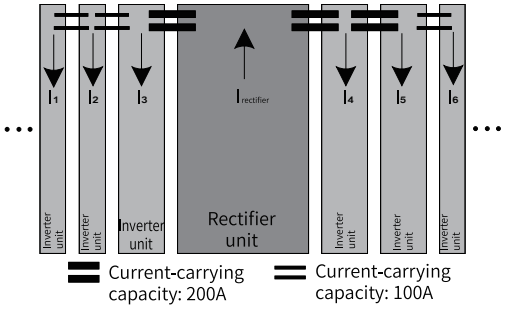	I rectifier ≥ 80% (I 1 + I 2 + I 3 + I4 + I5 + I6 + ...) I 1 + I 2 + I3 + ... ≤ 200 A I 4 + I 5 + I 6 + ... ≤ 200 A I 1 + I2 + ... ≤ 100 A I 6 +...≤ 100 A

Dual-tier installation

If space in the cabinet is limited, dual-tier installation is available. In the dual-tier installation, the rectifier unit is generally placed on the left. If there are two rectifier units, install one rectifier unit on each tier. If there are more than two rectifier units, it is recommended to separately install them in multiple cabinets. The following table describes the typical arrangement modes of dual-tier installation.

Arrangement mode	Example	Bus current calculation
One rectifier unit	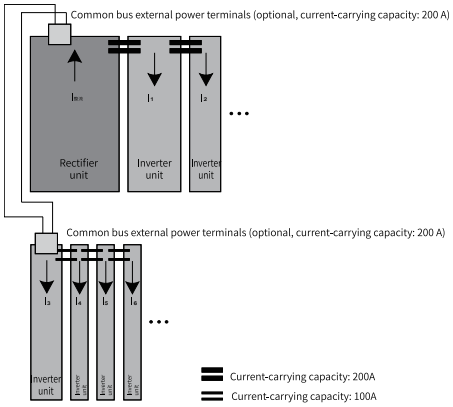	$I_{rectifier} \geq 80\% (I_1 + I_2 + I_3 + I_4 + I_5 + I_6 + ...)$ $I_1 + I_2 + ... \leq 200$ A $I_3 + I_4 + I_5 + I_6 + ... \leq 200$ A $I_4 + I_5 + I_6 + ... \leq 100$ A
Two rectifier units	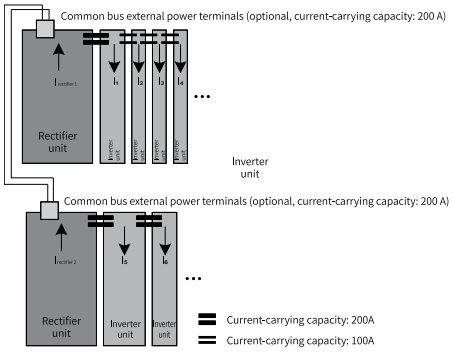	$I_{rectifier\ 1} + I_{rectifier\ 2} \geq 80\%(I_1 + I_2 + I_3 + I_4 + I_5 + I_6 + ...)$ $I_1 + I_2 + I_3 + I_4 + ... \leq 200$ A $I_2 + I_3 + I_4 + ... \leq 100$ A $I_5 + I_6 + ... \leq 200$ A $I_{rectifier\ 1} / I_{rectifier\ 2} \approx (I_1 + I_2 + I_3 + I_4 + ...)/(I_5 + I_6 + ...)$

3 Installation Precautions

3.1 Installation Flowchart

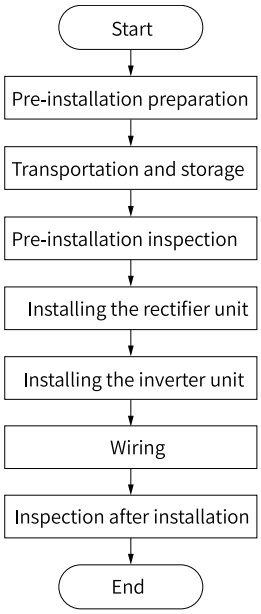

3.2 Preparations Before Installation

3.2.1 Requirements on Installation Personnel

Danger

All operations described in this user guide can be performed by trained professionals only.

- Have knowledge and experience in electrical engineering.
- Received professional training and operating qualifications required by the local country.
- Be capable of identifying potential hazards during operations and responding to emergencies.

Caution

Inovance assumes no responsibility for any damage, personal injury or even death arising from violations of the safety instructions or operations by unqualified personnel.

3.2.2 Installation Environment Requirements

Item	Description
Ambient temperature	-10℃ to +50℃, with the rated current de-rated by 1.5% for each 1℃ higher if the ambient temperature is above 40℃ Maximum temperature: +50℃ Temperature variation: < 0.5 ℃/min
Ambient humidity	20% RH to 95% RH (non-condensing)
Storage temperature	-25℃ to +70℃
Storage humidity	< 95% RH, without condensation
Vibration resistance	• Inverter unit: ≤ 1 g • Rectifier unit: not exceeding 0.6 g. Keep away from equipment such as punch presses.
Shock	Below 2G
IP rating	IP20
Altitude	Below 1000 m: no derating 1000–3000 m: derated by 1% for altitude increase by every 100 m
Enclosure	This product must be installed in a fireproof cabinet with doors that provide effective electrical and mechanical protection. The installation must conform to local and regional laws and regulations, and to relevant IEC requirements.
Pollution degree	PD2
Mounting surface	Mounting surface requirements: The mounting surface must be flame retardant. Its structural strength must meet the strength requirements for transportation, storage, and running under normal conditions to avoid damages due to vibration or excessive deformation of the installation surface. The mounting surface must remain vertical to the horizontal ground and be secured to the cabinet properly. The mounting surface must be able to withstand not less than four times the total weight of the installed equipment.

Note

- This product must be installed in a cabinet as part of a final system that is provided with effective flameproof, electrical, and mechanical protection. The installation must conform to local and regional laws and regulations, and to relevant IEC requirements.
- A large amount of heat may be generated during the operation of the cabinet. There must be plenty of cooling space in the installation area. Ensure that the cooling holes of the cabinet are not blocked.
- Install the servo drive inside a cabinet free from sunlight and rain;
- Install the servo motor in an environment free from corrosive or flammable gases or combustible objects, such as hydrogen sulfide, chlorine, ammonia, sulphur gas, chlorinated gas, acid, soda, and salt.
- Install the servo drive in an environment free from high temperature, moisture, dust, and metal powder.

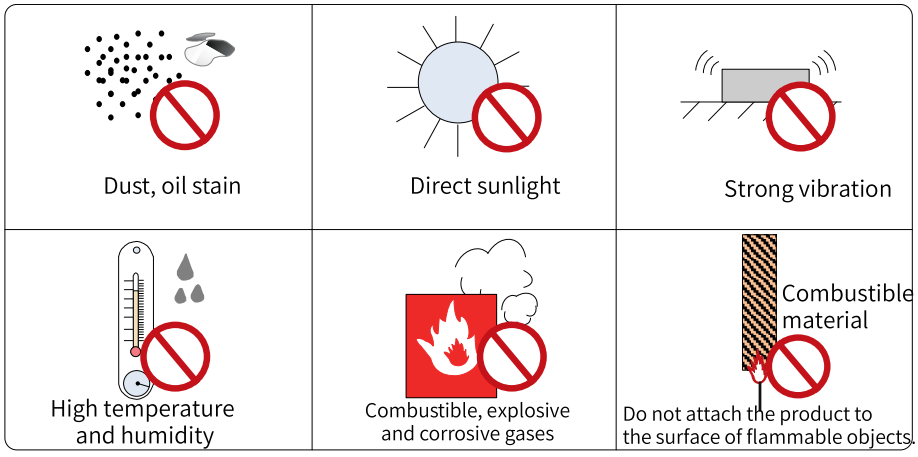

3.2.3 Installation Direction

Note

- Incorrect installation direction may cause overtemperature alarm or damage.
- Install the drive vertically upward only. Do not lie down the drive horizontally or by its side, or install it in the upside-down direction, as shown in the following figure.

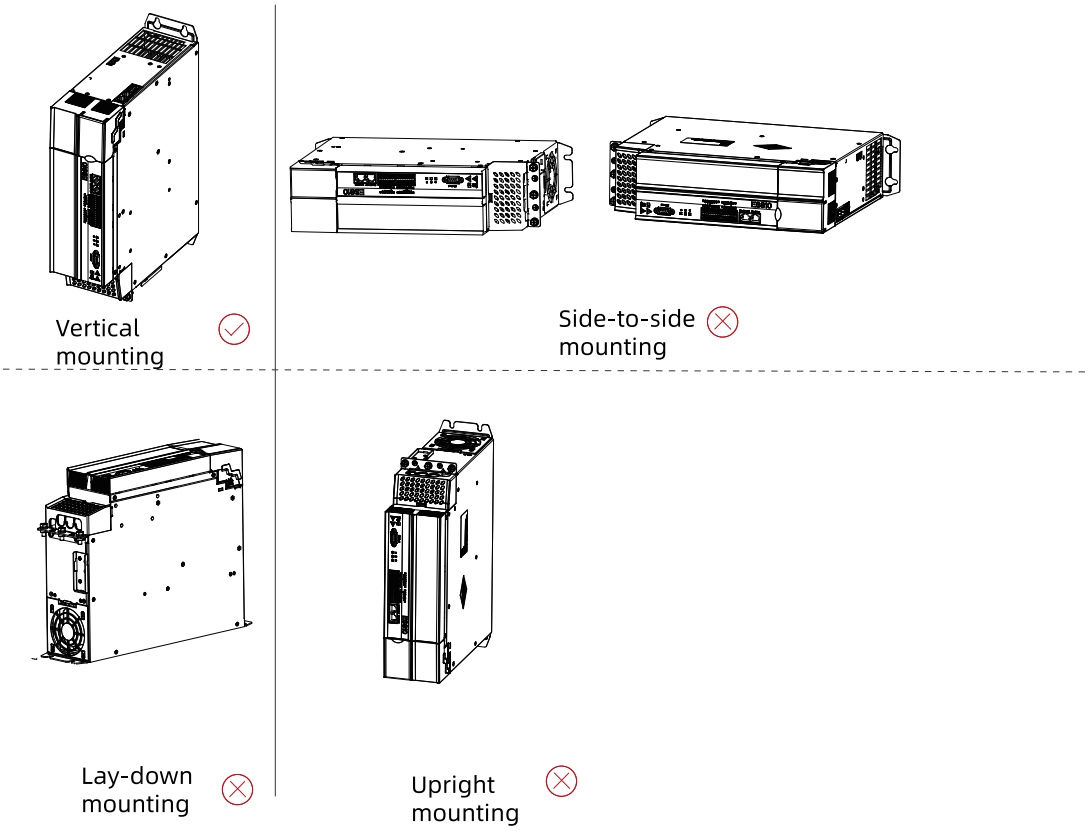

3.3 Unpacking and Transportation

Transportation

Transportation loss precautions

- When receiving goods from a transportation company, check the ES810 series rectifier unit and inverter units carefully.
- Check that you have received all the items specified on the delivery note.
- Notify the shipping company immediately of any missing or damaged components.
- If you find any invisible loss or damage, notify the shipping company immediately and ask it to perform equipment qualification.
- If you do not notify the shipping company immediately, you might lose the right to claim compensation for goods loss or damage.
- If necessary, contact local Inovance technical office for support.

Transportation precautions

- Pack the equipment according to the requirements (such as climatic conditions) during the transportation and of the destination before the equipment leaves the factory.
- Follow precautions for transportation, storage, and operation indicated on the package.
- Place the equipment on a wooden chassis or pallet when transporting it with a forklift.
- Do not disassemble the equipment as long as it is still placed on the wooden chassis for further transportation.
- Allowable ambient temperature during transportation: -25℃ to +70℃, class 2K3 according to IEC 60721-3-2, maximum 24 hours at -40℃

Warning

- Transportation loss indicates that the drive is under improper stress so that the electrical safety performance of the drive cannot continue to be ensured. Do not connect the equipment before a professional test is performed.
- Failure to comply may result in death, serious injuries or great property loss.
- The equipment cannot be stored for more than one year. If the storage period exceeds one year, the DC bus capacitor in the power component must be recharged during commissioning.

Unpacking

- Before unpacking, check whether the package is intact without damage, water seepage, damp, and deformation. For details about the exterior package, see the Confirmation of Part Packaging Solution. If you find any problem, inform the shipping company immediately. If necessary, contact Suzhou Inovance's local office or on-site personnel for support.
- Unpack the product layer by layer. Do not strike the package violently.
- Remove the honeycomb carton.
- During unpacking, check whether the product and its accessories have any damage, corrosion, or bump on the surface. If you find any problem, inform the shipping company immediately. If necessary, contact Suzhou Inovance's local office or on-site personnel for support.

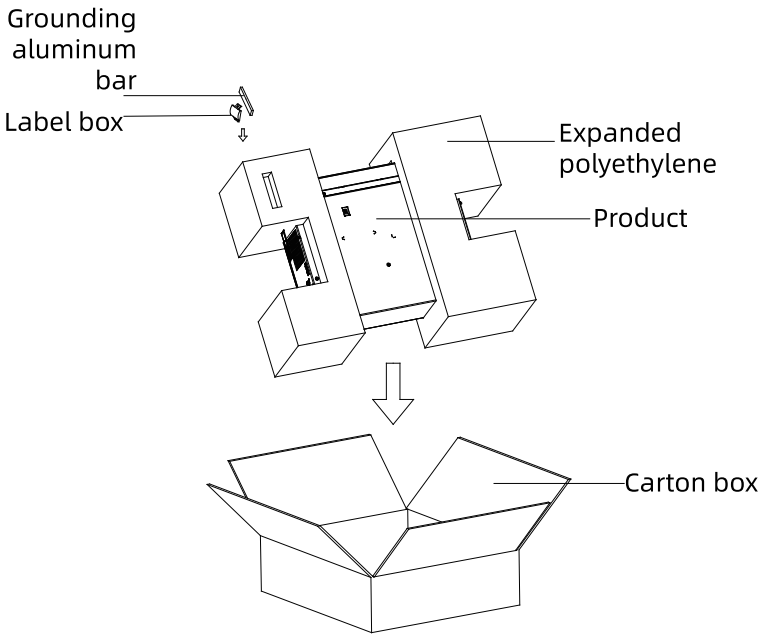

Figure 3-1 Unpacking the drive

Procedure

1. Open the outer packing carton.
2. Remove the expanded polyethylene.
3. Open the bag and take out the product.

Table 3–1 Unpacking checklist

No.	Item	Tick
1	The contents and quantities in the packaging box match the outer label on the box.	□
2	The product enclosure is free of deformation, paint peeling, and cracks.	□
3	Terminals are securely fastened with no looseness or detachment.	□

Storage



Store and transport the equipment as required to prevent damage.

- The drive must be placed in a clear and dry space. Temperature shall maintain in the range of -25℃ to +70 ℃ (level 1K4 according to IEC 60721-3-1). Temperature fluctuation shall not exceed 20℃/h.
- Covering or corresponding measures must be taken during long-term storage to ensure that the drive is not polluted and environmentally affected. Otherwise, the right of compensation for damage will lose effectiveness.
- Do not store or transport the equipment in locations where the equipment may be exposed to splashing water or rain, direct sunlight, strong electric field, strong magnetic field, or strong vibration.
- Do not expose the equipment to environments with moisture, high temperature, or strong sunlight for a long time.
- During storage, pack the product into the dedicated packing box provided by Inovance.
- During storage, prevent label abrasion or detachment from packaging cases. Neither the product nor packaging cases should withstand heavy pressure, impact, or dropping. Covering or corresponding measures must be taken to ensure the product is protected from contamination and corrosion.
- The product may be temporarily stored when the original packaging is not opened and the following storage conditions are met, but the total time of storage and transportation must not exceed 3 months.
- Pack the equipment securely and properly before transportation. Use a fully enclosed container for long-distance transportation.
- Never transport this product with materials that harm or have negative impacts on this product.

3.4 Cabinet Design

3.4.1 Clearance Requirements

The ES810 series rectifier unit and inverter unit are booksize units. The booksize unit features four width designs, including 50 mm, 100 mm, 200 mm, and 300 mm. The recommended installation methods include single-tier installation and dual-tier installation. In dual-tier installation, install a heat-insulating air guide plate on the lower-level unit. The minimum clearance to be maintained between the two tiers is shown in the table below.

Table 3–2 Minimum clearance between upper and lower units

Item	Booksize unit			
	50-mm-wide unit	100-mm-wide unit	200-mm-wide unit	300-mm-wide unit
S1	≥ 300 mm	≥ 300 mm	≥ 300 mm	≥ 300 mm
S2	≥ 300 mm	≥ 300 mm	≥ 300 mm	≥ 300 mm
S3	≥ 300 mm	≥ 300 mm	≥ 300 mm	≥ 300 mm

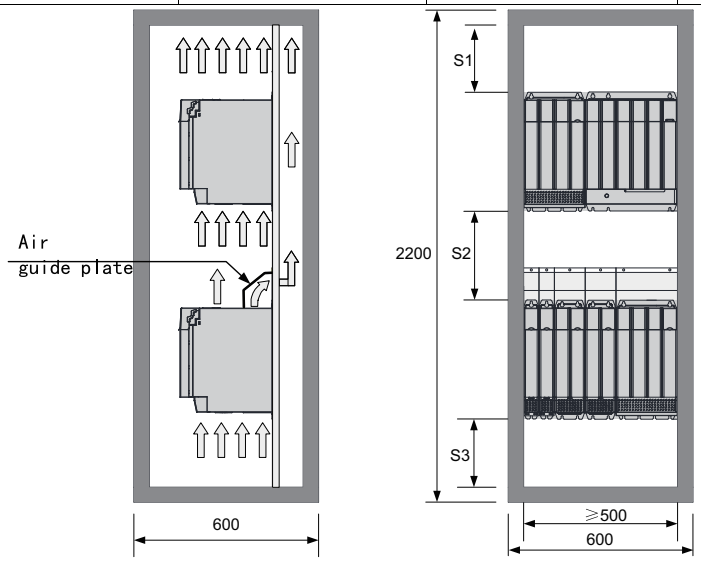

Figure 3-2 Dual-tier installation space for booksize units

Note

It is recommended that the rectifier unit and inverter unit be installed vertically.

3.4.2 Mounting Backplate Design Requirements

Thickness and stiffness reinforcement principles

To avoid damage to the unit during transportation and ensure its normal operation, the mounting backplate of the unit must feature excellent stiffness and strength performance and a thickness of not less than 2 mm. Reinforcement must be performed at the top and bottom mounting feet. The recommended reinforcement scheme is as follows:

- Scheme 1: Reinforcing the lateral bending of the backplate

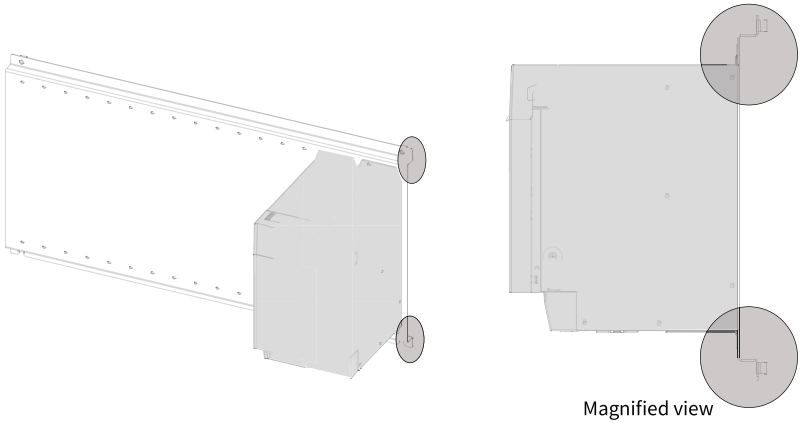

- Scheme 2: Welding a lateral reinforced beam on the back of the backplate

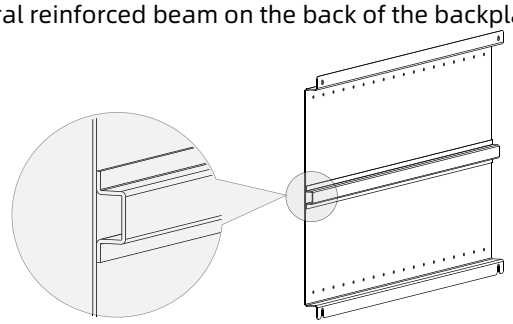

Mounting hole principles

- The booksize unit features equal height and equal spacing of 50 mm for mounting holes. Pre-drill mounting holes on the backplate to facilitate installation.
- To avoid damage to the unit during transportation, secure the screw by tapping a thread directly into the backplate. In addition, use self-clinching nuts or separate nuts on the back of the backplate to maximize thread engagement and fastening strength.

Note

To ensure reliable contact of the built-in DC busbar inside the unit, the relative positions of the unit mounting holes must be accurate. It is strongly recommended that the mounting holes be pre-machined on the backplate; on-site drilling of mounting holes is not recommended.

Dimensions of mounting holes for the booksize units

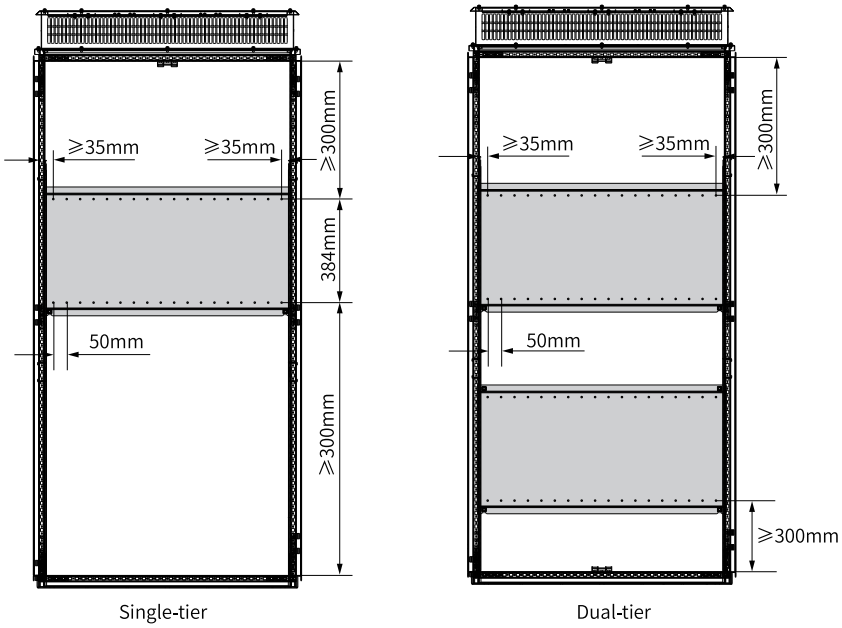

3.4.3 Cabinet Cooling Design Requirements

Heat dissipation design of the cabinet door

As the unit dissipates heat through the fan, the air inlet on the cabinet door must be wide enough to allow the cooling air to enter the cabinet.

The air flows from bottom to top after being heated. Therefore, the cabinet air inlet must be at least 50 mm lower than the air inlet of the unit, as shown below.

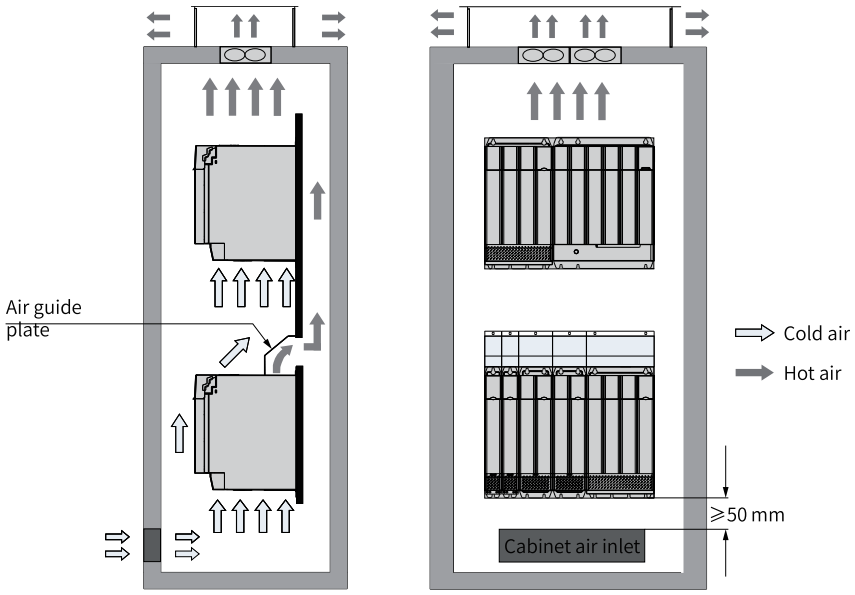

Figure 3-3 Position of the cabinet air inlet hole

Note

For applications where multiple units are installed within one cabinet, if the fan blows air into the cabinet through the air inlet from outside, disordered air flow distribution can occur among the inverter units inside the cabinet, which can degrade the overall heat dissipation performance. Therefore, do not install a fan at the air inlet of the cabinet to blow air into the cabinet.

After the unit is installed in the cabinet, the minimum effective ventilation area of the air inlet is as follows.

Table 3–3 Minimum effective ventilation area of the cabinet air inlet for the rectifier unit

Rectifier unit model	Module power	Minimum effective ventilation area of the cabinet air inlet (cm^2)
ES810-20M4T56-10	22 kW	15
ES810-20M4T110-10	45 kW	50
ES810-20M4T240-00	110 kW	90
ES810-20M4T358-00	160 kW	150

Table 3–4 Minimum effective ventilation area of the cabinet air inlet for the inverter unit

Inverter unit model	Module power	Minimum effective ventilation area of the cabinet air inlet (cm^2)
ES810-50M4T005-20	2.2 kW	15
ES810-50M4T009-20	3.7 kW	15
ES810-50M4T013-20	5.5 kW	15
ES810-50M4T017-20	7.5 kW	15
ES810-50M4T025-20	11 kW	45
ES810-50M4T025-20	15 kW	45
ES810-50M4T037-20	18.5 kW	45
ES810-50M4T045-20	22 kW	70
ES810-50M4T060-20	30 kW	70
ES810-50M4T075-20	37 kW	70
ES810-50M4T075-20	45 kW	90
ES810-50M4T112-20	55 kW	90
ES810-50M4T150-20	75 kW	90
ES810-50M4T200-20	105 kW	147
ES810-50M4T240-20	126 kW	147

Note

- This table applies to an individual module. For a cabinet containing multiple units, calculate the total ventilation area by adding the ventilation area of each unit according to the table. For example, if there are eight 7.5 kW inverter units, two 22 kW inverter units and one 160 kW rectifier unit in the cabinet, the minimum effective area of the cabinet air inlet is 8 x 15 + 2 x 70 + 1 x 150 = 410 cm^2.
- If a filter screen is installed at the air inlet, the intake air resistance will increase significantly, and the air inlet area must be increased to 1.2 to 1.5 x the value specified in the table.
- The effective area specified in the table refers to the actual through-hole area of the perforated region. Effective area = Area of perforated region x Cut-out ratio.

Top air outlet design

To ensure sufficient heat dissipation of the rectifier unit and the inverter unit, hot air in the cabinet must be exhausted to the outside. The passive or active air ventilation mode can be adopted.

- Forcible air exhaust (direct air exhaust)
  The air flows from bottom to top after being heated. In this mode, the hot air discharged by the unit is exhausted to outside from the air outlet at the top of the cabinet.

  Passive air exhaust can easily cause hot air to accumulate on the upper part of the cabinet, causing the air pressure in this area to rise. The air pressure at the cabinet air inlet is low due to suction of the fan for the unit. Therefore, there is an air pressure difference between the air outlet and air inlet of the cabinet to form an air flow in the cabinet. This air flow forces hot air at the air outlet to flow towards the air inlet so that it is absorbed into the unit again, causing a great temperature rise and an adverse effect on the performance of the unit.

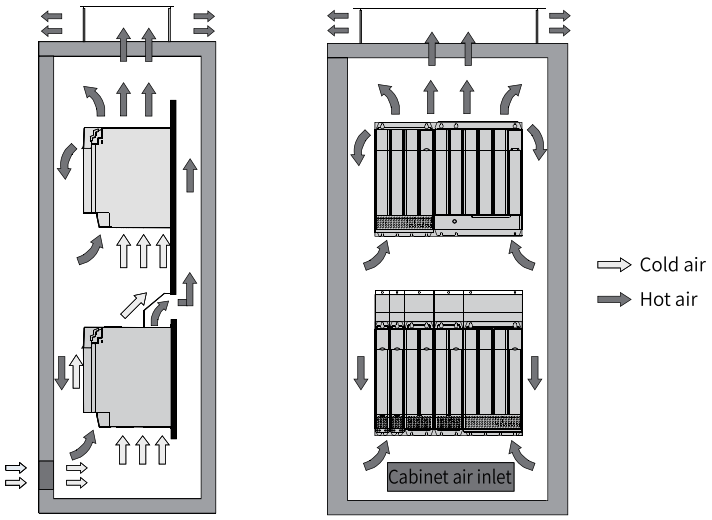

Figure 3-4 Hot air backflow in forcible air exhaust mode (without isolation device)

Therefore, in passive air ventilation, use an isolating device in the cabinet to prevent backflow of hot air. The isolation device can be a plate or an exhaust duct.

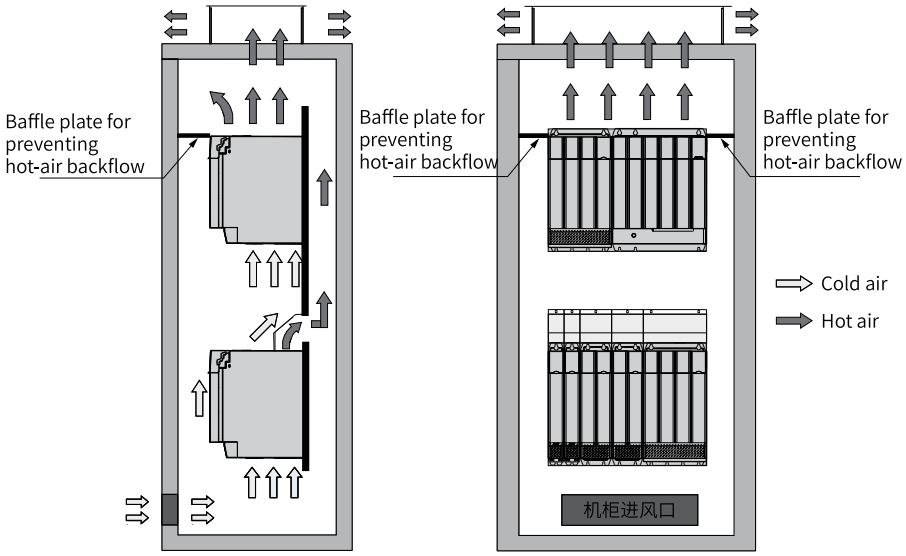

Figure 3-5 Hot air backflow in forcible air exhaust mode (with isolation device)

The temperature at the air outlet of the rectifier unit and the inverter unit is high and the density at the air outlet is lower than that at the air inlet. To ensure that hot air can be exhausted to the

outside of the cabinet, the minimum effective ventilation areas of the cabinet air outlet must meet the following requirements when passive air ventilation is used.

Table 3–5 Minimum effective ventilation area of the air outlet of the rectifier unit in the passive air ventilation mode

Rectifier unit model	Module power	Minimum effective ventilation area of the cabinet air outlet (cm^2)
ES810-20M4T56-10	22 kW	24
ES810-20M4T110-10	45 kW	80
ES810-20M4T240-00	110 kW	145
ES810-20M4T358-00	160 kW	240

Table 3–6 Minimum effective ventilation area of the air outlet of the inverter unit in the passive air ventilation mode

Inverter unit model	Module power	Minimum effective ventilation area of the cabinet air outlet (cm^2)
ES810-50M4T005-20	2.2 kW	24
ES810-50M4T009-20	3.7 kW	24
ES810-50M4T013-20	5.5 kW	24
ES810-50M4T017-20	7.5 kW	24
ES810-50M4T025-20	11 kW	72
ES810-50M4T025-20	15 kW	72
ES810-50M4T037-20	18.5 kW	72
ES810-50M4T045-20	22 kW	112
ES810-50M4T060-20	30 kW	112
ES810-50M4T075-20	37 kW	112
ES810-50M4T075-20	45 kW	145
ES810-50M4T112-20	55 kW	145
ES810-50M4T150-20	75 kW	145
ES810-50M4T200-20	105 kW	235.1
ES810-50M4T240-20	126 kW	235.1

Note

- This table applies to an individual module. When there are multiple modules in the cabinet, the sum of the above-mentioned areas is the total requirement for air outlet area.
- If a filter screen is installed at the air outlet, the exhaust resistance will increase significantly, and the air outlet area must be increased to 1.2 to 1.5 x the value specified in the table.
- The effective area specified in the table refers to the actual through-hole area of the perforated region. Effective area = Area of perforated region x Cut-out ratio.

- Active air exhaust

  In active air ventilation mode, a fan is installed at the top of the cabinet to draw hot air out of the cabinet. This is a commonly used ventilation mode.

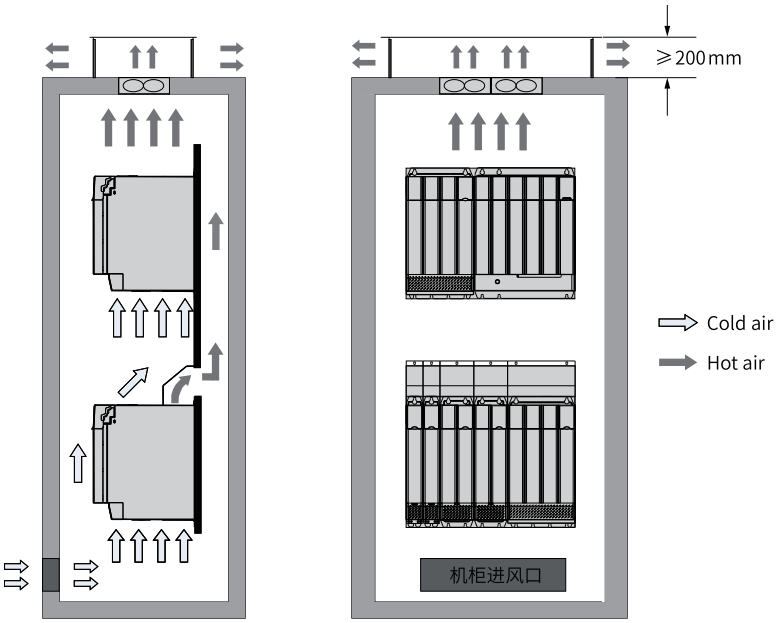

Figure 3-6 Cabinet air outlet system

To ensure that the hot air can be exhausted to the outside, the total air volume of the fan cannot be smaller than that of all units in the cabinet. The following table describes the cooling air volume required for the rectifier unit and inverter unit.

Table 3–7 Cooling air flow of the rectifier unit

Rectifier unit model	Module power	Cooling air volume (CFM)
ES810-20M4T56-10	22 kW	15
ES810-20M4T110-10	45 kW	40
ES810-20M4T240-00	110 kW	100
ES810-20M4T358-00	160 kW	310

Table 3–8 Cooling air volume of the inverter unit

Inverter unit model	Module power	Cooling air volume (CFM)
ES810-50M4T005-20	2.2 kW	10
ES810-50M4T009-20	3.7 kW	10
ES810-50M4T013-20	5.5 kW	10
ES810-50M4T017-20	7.5 kW	10
ES810-50M4T025-20	11 kW	40
ES810-50M4T025-20	15 kW	40
ES810-50M4T037-20	18.5 kW	55
ES810-50M4T045-20	22 kW	65
ES810-50M4T060-20	30 kW	75
ES810-50M4T075-20	37 kW	105
ES810-50M4T075-20	45 kW	130
ES810-50M4T112-20	55 kW	175
ES810-50M4T150-20	75 kW	195
ES810-50M4T200-20	105 kW	270
ES810-50M4T240-20	126 kW	270

Note

1 CFM = 0.02832 m^3/min

Cabinet fan selection

Cabinet fan selection procedure:

1. Calculate the sum of cooling air flows required for all modules according to *"Table 3-7" on page 43* and *"Table 3-8" on page 43*.
2. Determine the maximum air flow value (Qmax) of the cabinet fan.
3. Determine the specifications and quantity of the fan based on the maximum air volume (Qmax).

Where:

Qmax = (1.3 to 1.5) x Sum of cooling air volume

Maximum air volume of the cabinet = 1.6 to 2.2 x total cooling air volume (if mesh filters, shutters, or other components are installed at the cabinet air outlet)

Note

- The selected fan air flow cannot be lower than the maximum air flow Qmax. When an individual fan cannot meet this requirement, you can connect multiple fans in parallel.
- Pay attention to the suction direction during fan installation. Ensure air is drawn outwards from inside the cabinet, preventing failure of hot air exhaust which may cause overtemperature or damage to the rectifier unit.
- The distance between the top cover of the air outlet and the fan outlet must be at least 200 mm to improve the fan cooling performance.

The common specifications of the fan air volume is shown below.

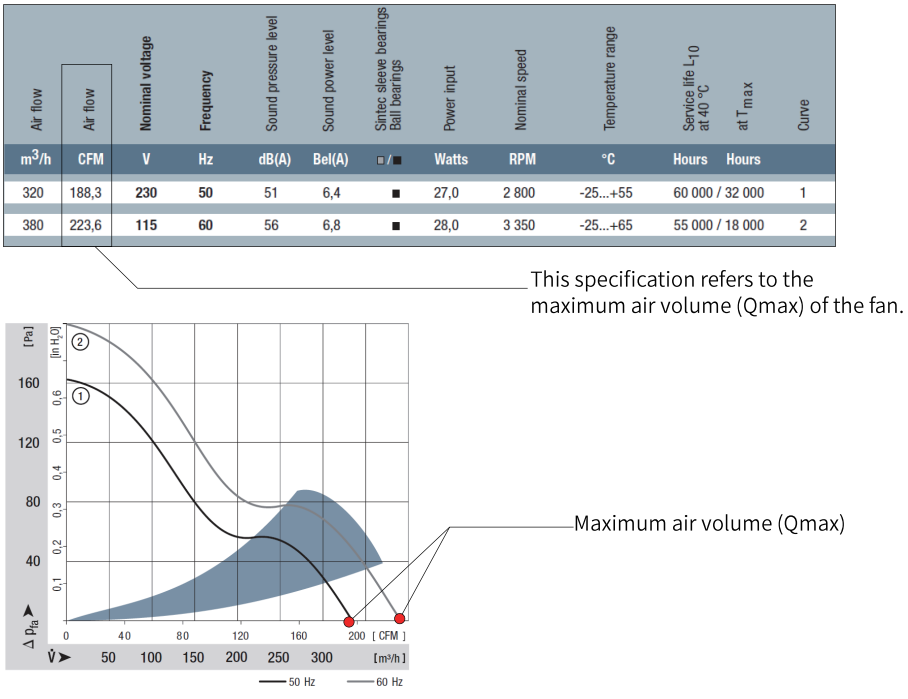

Figure 3-7 Q_{max} of a system fan

4 Mechanical Installation

4.1 Safety Precautions

Failure to comply with the following safety precautions for installation may result in device damage, physical injury, or even death. Strictly observe the following safety precautions.

Danger

- This equipment must be operated only by trained and qualified electrical personnel. Non-professionals must not operate this equipment.
- Do not install this equipment in places with strong electric or magnetic field.
- Before installation, check that the mechanical strength of the installation site can bear the weight of the equipment. Failure to comply can result in mechanical hazards.
- Do not wear loose clothes or accessories during installation. Failure to comply may result in an electric shock.
- Install the equipment on an incombustible object such as metal and do not touch or attach the equipment to combustibles. Failure to comply can result in fire.
- When placing the equipment on an inclined surface, take necessary measures to secure it before use.

Caution

- Read through the user guide and safety instructions before installation.
- Do not retrofit the equipment.
- Do not fiddle with the bolts used to fix equipment components or the bolts marked in red.
- Before installing devices with strong electromagnetic interference, such as a transformer, install a shielding device for the equipment to prevent malfunction.
- When the equipment is installed in a cabinet or terminal device, appropriate guard devices (guards for fire, electrical, and mechanical protection) meeting applicable IEC standards and local laws and regulations must be provided.
- Cover the side of the equipment with a piece of cloth or paper during installation. This is to prevent unwanted objects such as metal chippings, oil, and water from falling into the equipment and causing faults. After installation, remove the cloth or paper on top of the product to prevent over-temperature caused by poor ventilation due to blocked ventilation holes.
- Resonance may occur when the equipment operating at a constant speed executes variable speed operations. In this case, install the vibration-proof rubber under the motor frame or use the vibration suppression function to reduce resonance.

4.2 Pre-installation Inspection

Complete the following inspection items before installation.

No.	Item	Tick
1	The product model is consistent with the model specified in the order.	☐
2	All required parts are provided.	☐
3	The nameplate and label are intact and not re-assembled, altered, or covered.	☐
4	The specifications on the nameplate meet your use requirements.	☐
5	The enclosure is not deformed or cracked, and the joints are well sealed.	☐
6	All screws are in place.	☐
7	The signal terminals are free of breakage and foreign matters. The pins are not skewed.	☐

No.	Item	Tick
8	The mechanical strength of the mounting position can bear the weight of the device.	□
9	The load-bearing capacity of the ground and the environment meet the installation requirements.	□
10	Sufficient clearance is reserved for heat dissipation, including for heat dissipation of other devices in the cabinet.	□
11	The mounting bracket (if needed) is made of flame-retardant material.	□
12	If the application site is exposed to metal dust, install the equipment in an enclosed cabinet to isolate the equipment from the metal dust. In this case, the space inside the cabinet needs to be as large as possible.	□
13	Keep combustible and explosive materials away from the equipment.	□

4.3 Installation Dimensions

4.3.1 Rectifier Unit

The ES810 series rectifier units are booksize units with equal height and depth. They are available in four widths: 50 mm, 100 mm, 200 mm, and 300 mm.

Note

The mounting hole diameter is Φ7.

Model	Total width	Dimensions	**Weight**	Structure
ES810-20M4T56-10	50 mm	[H2]: 400 mm [H1]: 384 mm [H]: 350 mm [W1]: 50 mm [W]: 50 mm [D]: 305 mm	3.8 kg	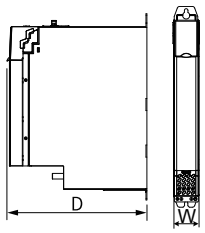
ES810-20M4T110-10	100 mm	[H2]: 400 mm [H1]: 384 mm [H]: 350 mm [W1]: 50 mm [W]: 100 mm [D]: 305 mm	8 kg	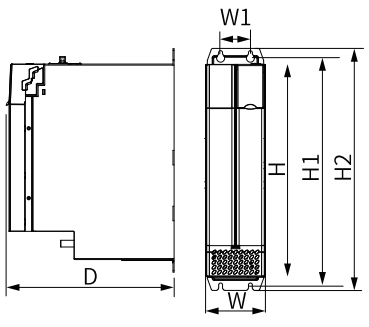

Model	Total width	Dimensions	**Weight**	Structure
ES810-20M4T240-00	200 mm	[H2]: 400 mm [H1]: 384 mm [H]: 350 mm [W1]: 150 mm [W]: 200 mm [D]: 305 mm	23 kg	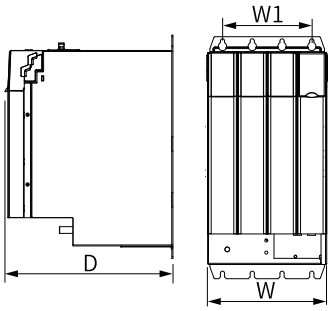
ES810-20M4T358-00	300 mm	[H2]: 400 mm [H1]: 384 mm [H]: 350 mm [W2]: 150 mm [W1]: 250 mm [W]: 300 mm [D]: 305 mm	38 kg	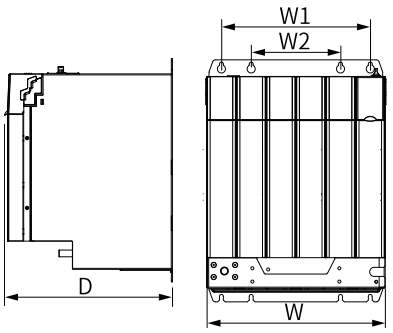

4.3.2 Inverter Unit

The ES810 series inverter units are booksize units with equal height and depth. They are available in four widths: 50 mm, 100 mm, 200 mm, and 300 mm.

Model	Total width	Dimensions	Weight	Structure
ES810-50M4T005-xx ES810-50M4T009-xx ES810-50M4T013-xx	50 mm	[H2]: 384 mm [H1]: 350 mm [H]: 400 mm [W]: 50 mm [D]: 305 mm	4 kg	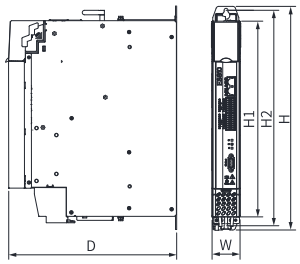
ES810-50M4T017-xx ES810-50M4T025-xx ES810-50M4T032-xx ES810-50M4T037-xx ES810-50M4T045-xx ES810-50M4T060-xx ES810-50M4T075-xx	100 mm	[H2]: 384 mm [H1]: 350 mm [H]: 400 mm [W1]: 50mm [W]: 100 mm [D]: 305 mm	8.5 kg	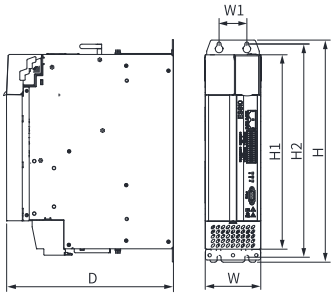
ES810-50M4T091-xx ES810-50M4T112-xx ES810-50M4T150-xx	200 mm	[H2]: 384 mm [H1]: 350 mm [H]: 400 mm [W1]: 150 mm [W]: 200 mm [D]: 305 mm	9.4 kg	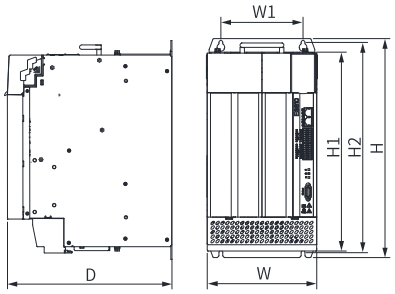
ES810-50M4T200-xx ES810-50M4T240-xx	300 mm	[H2]: 384 mm [H1]: 385.3 mm [H]: 411.8 mm [W2]: 150 mm [W1]: 250 mm [W]: 300 mm [D]: 303 mm	18.4 kg	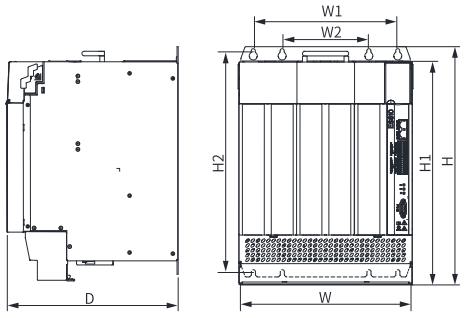

4.4 Installation Method

4.4.1 Rectifier Unit

Backplate mounting

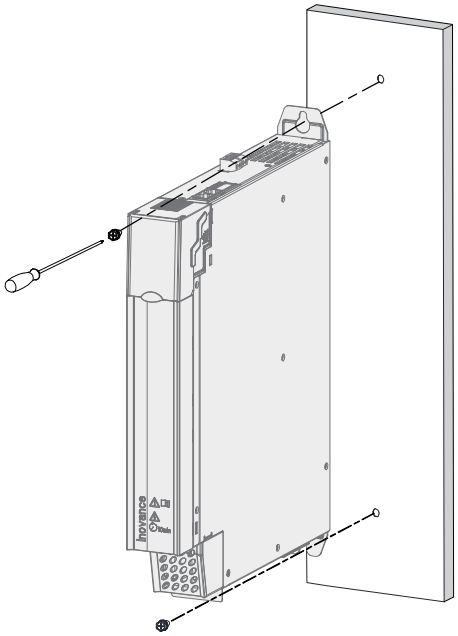

Figure 4-1 Backplate mounting of ES810-20M4T56-10 (50-mm-wide)

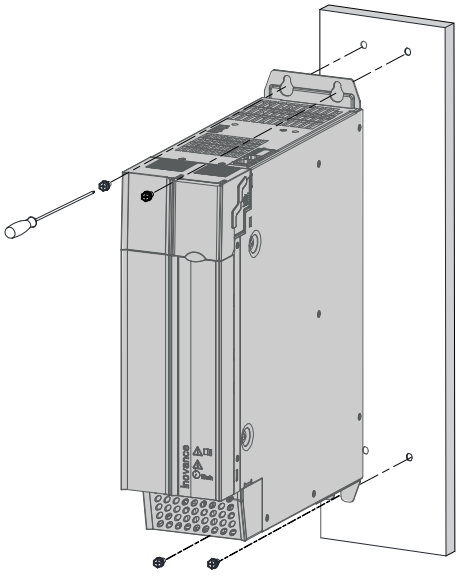

Figure 4-2 Backplate mounting of ES810-20M4T110-10 (100-mm-wide)

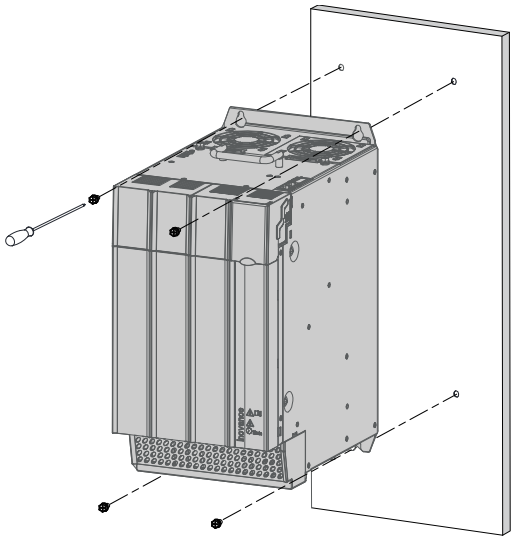

Figure 4-3 Backplate mounting of ES810-20M4T240-00 (200-mm-wide)

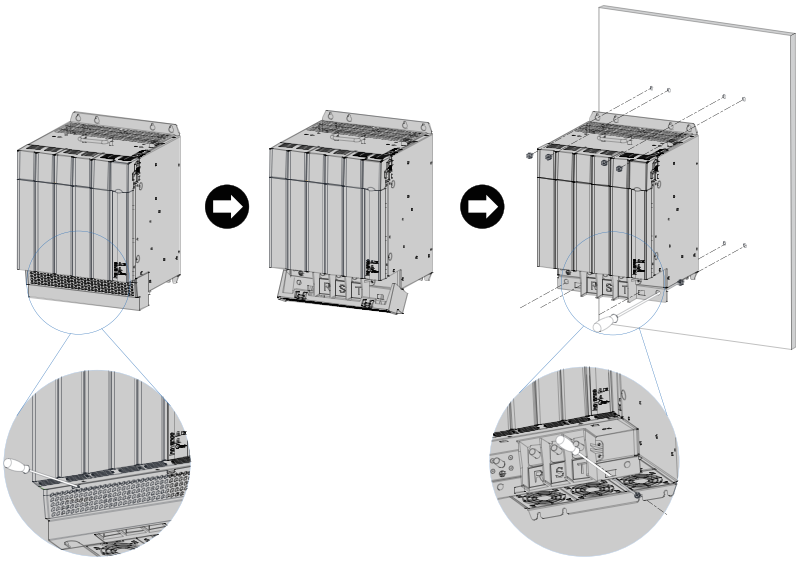

Figure 4-4 Backplate mounting of ES810-20M4T358-00 (300-mm-wide)

Installation procedure

- Insert a screwdriver in the left and right clasps of the power terminal cover and push them up lightly to loosen the clasps.
- Turn downwards the terminal cover loosen from the clasps and remove it from the shell.
- Fabricate mounting holes, as shown in the figures, on the mounting backplate. The M6 mounting nuts are used.
- Attach the unit to the mounting backplate with M6x15 screws and fix the screws.
- Align the power terminal cover with the limit holes on the enclosure and press it lightly. If a click is heard, the installation is correct.

Note

For tightening the two middle screws at the bottom, pass the screwdriver through the limit holes in the power terminal snap clip for fastening. Recommended Phillips screwdriver for installation: Tip size #3, shank length ≥ 190 mm

Through-hole mounting

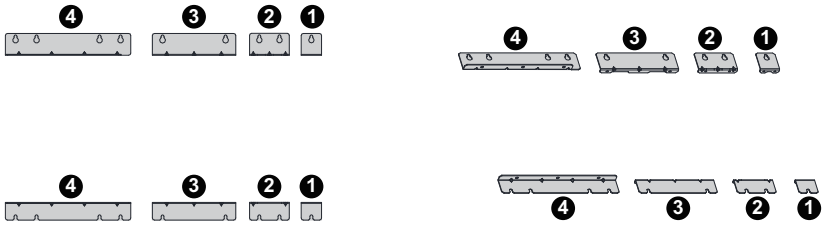

Figure 4-5 Through-hole mounting bracket

- ① Upper and lower through-hole mounting brackets of 50-mm-wide unit
- ② Upper and lower through-hole mounting brackets of 100-mm-wide unit
- ③ Upper and lower through-hole mounting brackets of 200-mm-wide unit
- ④ Upper and lower through-hole mounting brackets of 300-mm-wide unit

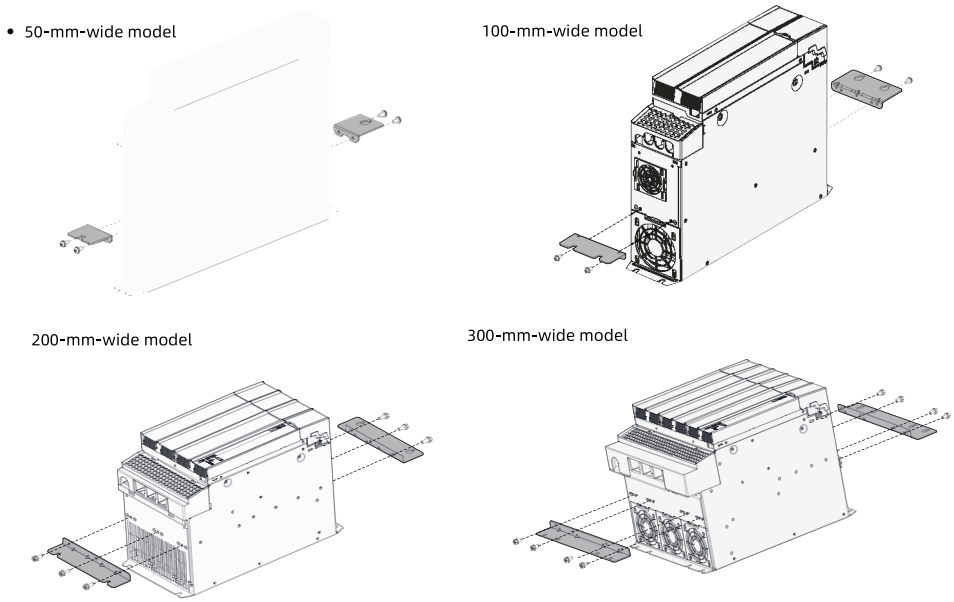

Figure 4-6 Installation of upper and lower through-hole mounting brackets on the unit

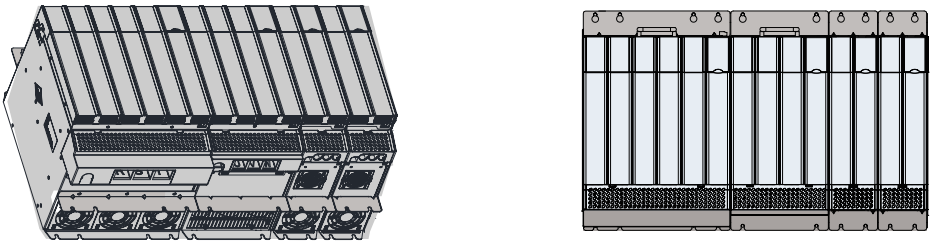

Figure 4-7 Installation completed

Installation of common bus external power terminal

The 200 A common bus external power terminal used for the ES810 series rectifier unit is not installed by default. If necessary, assemble it by yourself.

Installation example of 100 A common bus external power terminal (22 kW rectifier unit)

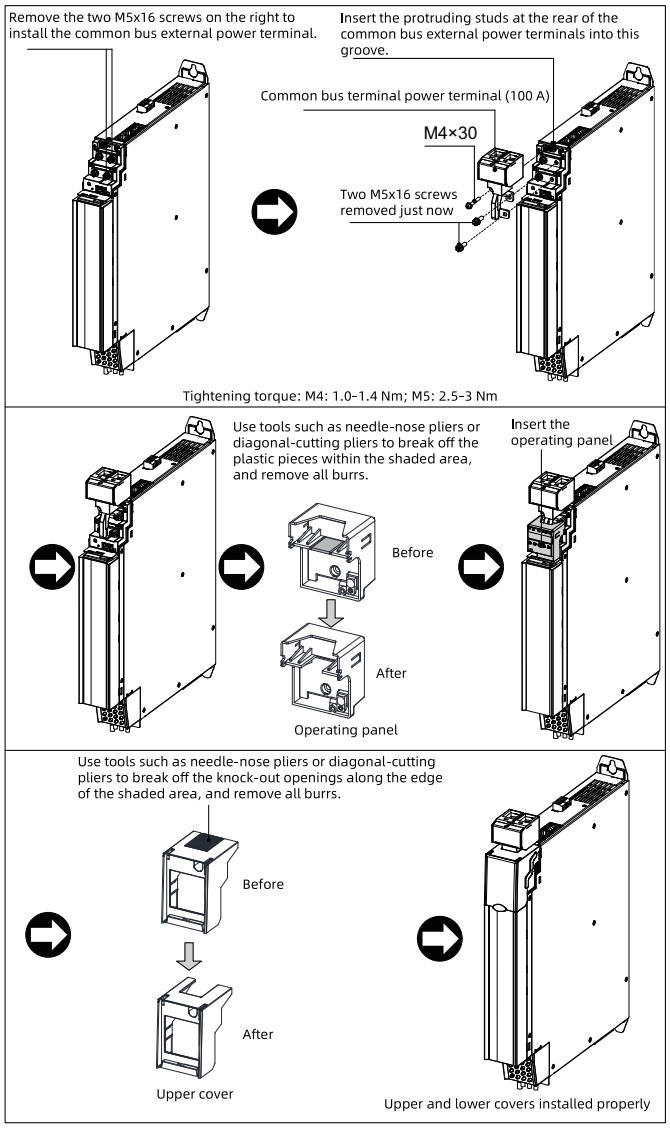

Installation example of 200 A common bus external power terminal (45 kW rectifier unit)

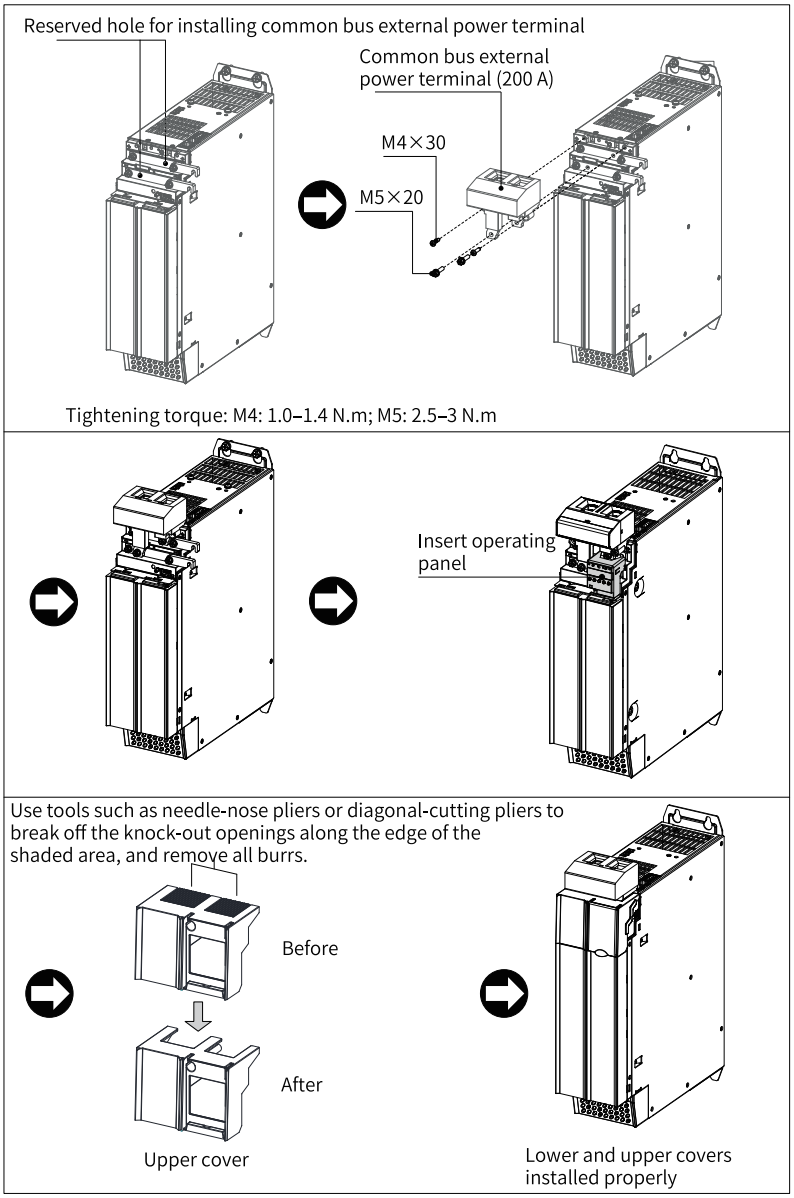

Figure 4-8 Installation example of 200 A common bus external power terminal (45 kW rectifier unit)

The installation procedure of the 110 kW and 160 kW rectifier units is the same as the 45 kW rectifier unit. The following figures show the position examples after the installation is completed.

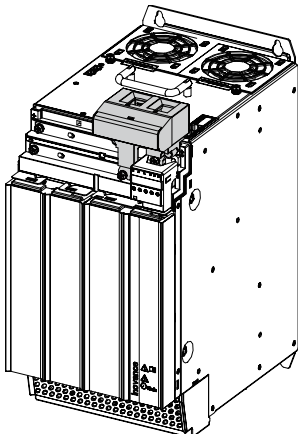

Figure 4-9 Installation example of 200 A common bus external power terminal (110 kW rectifier unit)

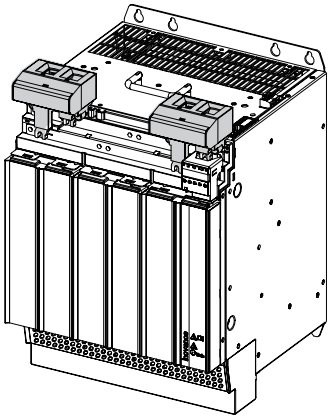

Figure 4-10 Installation example of 200 A common bus external power terminal (160 kW rectifier unit)

Note

The 110 kW and 160 kW common bus external power terminals of the ES810 series rectifier unit have been installed in the factory.

4.4.2 Inverter Unit

Backplate mounting

- Recommended torque during installation (N·m)

Item	M6	M8	M10	M12
Recommended torque (N·m)	4.8	13	20	35

Note

- Ensure that there is enough installation space on the right of the rectifier unit to install the product.
- A multi-axis system requires units to be lined up in a row along the top.
- Mark the position of the threaded holes for installation and drill a screw hole on the baseplate for each screw.
- The drive must be installed on the baseplate vertically.

- Backplate mounting of the drive

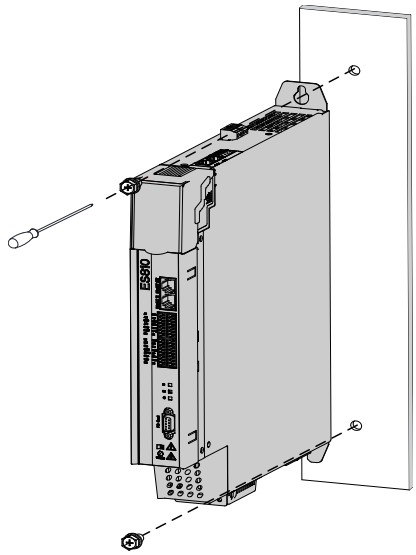

Figure 4-11 Backplate mounting of ES810-50M4T005-xx to ES810-50M4T013-xx (50-mm-wide)

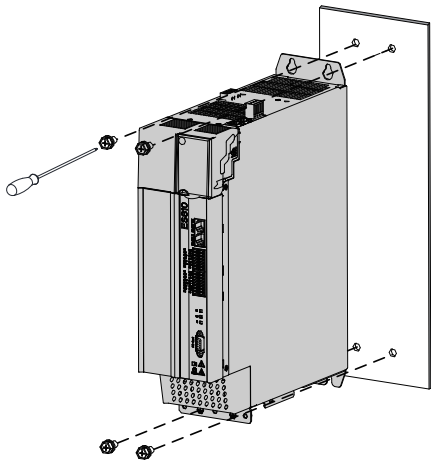

Figure 4-12 Backplate mounting of ES810-50M4T017-xx to ES810-50M4T075-xx (100-mm-wide)

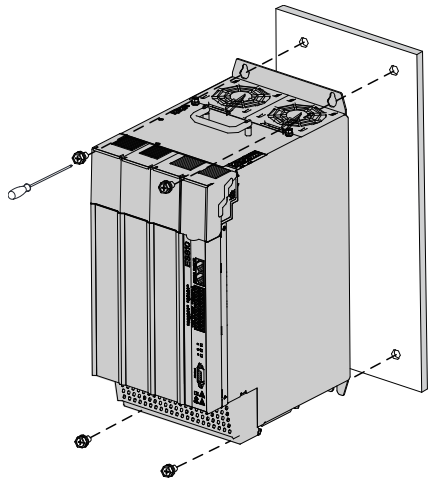

Figure 4-13 Backplate mounting of ES810-50M4T091-xx to ES810-50M4T150-xx (200-mm-wide)

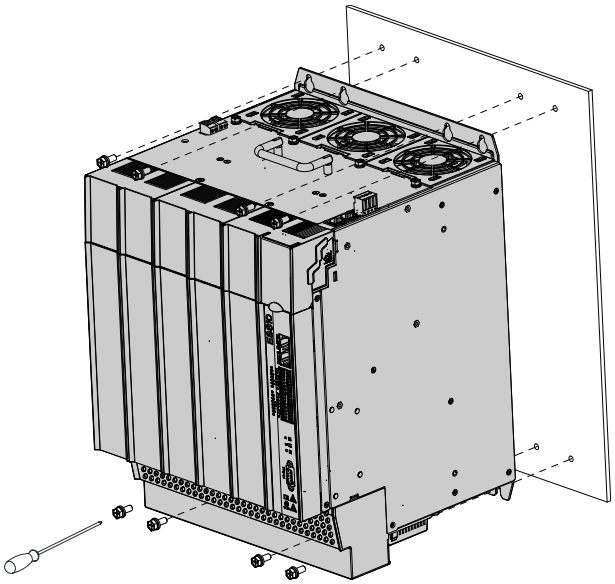

Figure 4-14 Backplate mounting of ES810-50M4T200-xx to ES810-50M4T240-xx (300-mm-wide)

- Cooling
  Make sure the drive is installed vertically to the wall. Cool the drive by natural convection or a cooling fan.

  As shown in *"3.4.1 Clearance Requirements" on page 37*, keep sufficient space around the inverter unit to ensure the cooling effect by a cooling fan. Install the cooling fan onto the top of the servo drive to avoid excessive temperature rise in a certain region, keeping an even temperature inside the cabinet.

- Grounding
  Ground the grounding terminal properly. Failure to comply may result in electric shock or malfunction due to interference.

  To achieve proper grounding across the entire system, when installing multiple rectifier units and inverter units onto the mounting surface, install grounding aluminum busbar between the mounting holes of adjacent units. Then secure the units to the mounting surface, ensuring that every two adjacent units are connected by a grounding aluminum busbar.

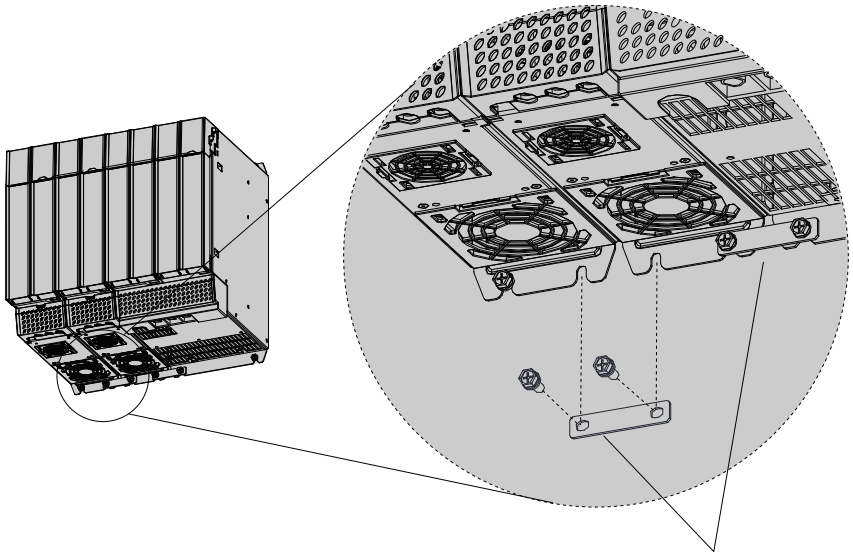

EMC grounding aluminum busbar (accessory, shipped as standard)
Connect each device in series using the EMC grounding aluminum busbar.

Figure 4-15 System grounding

- Routing requirements

  When wiring the inverter unit, route the cables downward (refer to the figure below) to prevent liquid on the site from flowing into the inverter unit along cables.

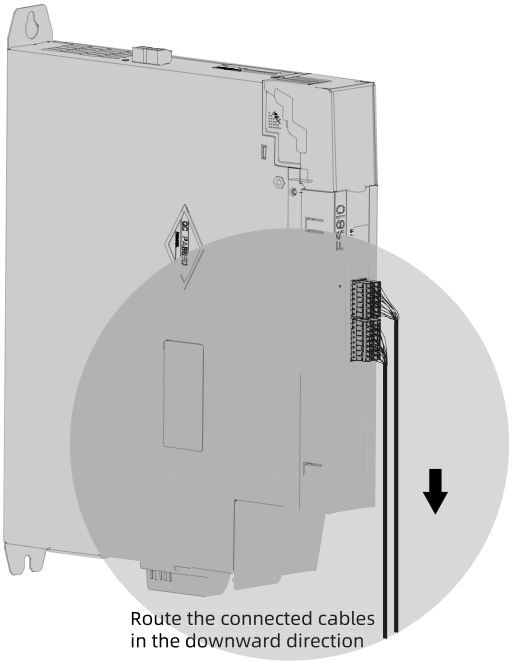

Figure 4-16 Routing direction

4.4.3 Removing/Installing the Cover

4.4.3.1 Rectifier Unit

<table>
<tr><th colspan="3">Removing the cover</th></tr>
<tr>
<td>(1) Lift up the translucent operating panel cover. Loosen the screws in the upper cover with a screwdriver.
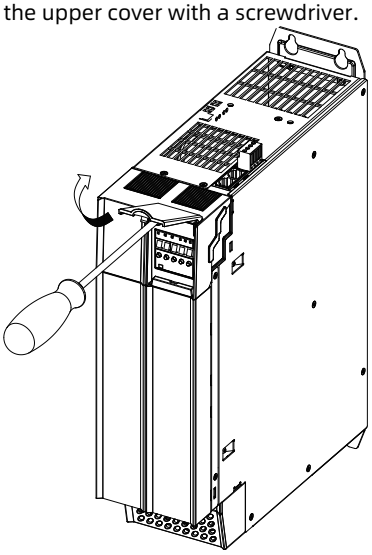</td>
<td>(2) Remove the upper cover by turning it frontward.
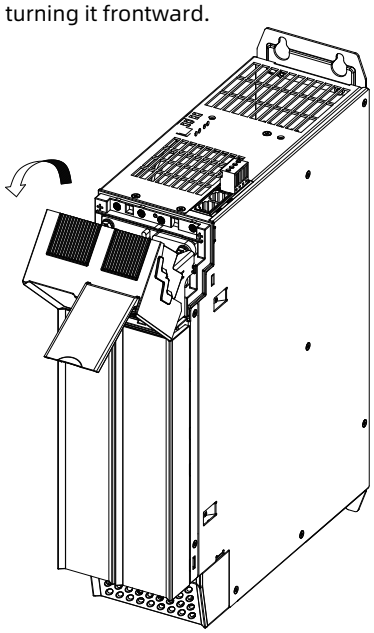</td>
<td>(3) Pull the whole operating panel box frontward.
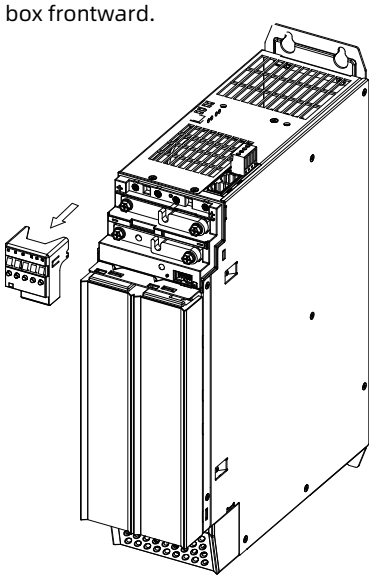</td>
</tr>
<tr>
<td>(4) Hold the bottom of the lower cover with your hands. Remove the lower cover by turning it forward.
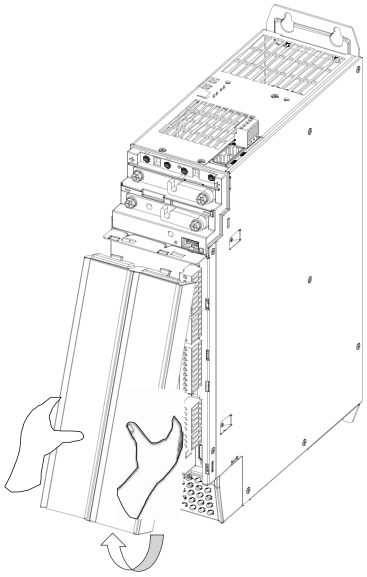</td>
<td>(5) Insert the tool (screwdriver) into the clasp of the power terminal cover. Pry the clasp.
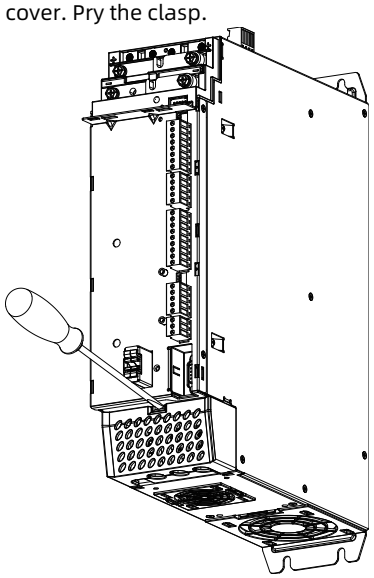</td>
<td>(6) Remove the power terminal cover.
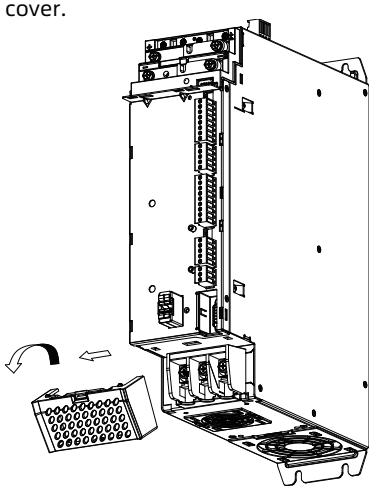</td>
</tr>
</table>

<table>
<tr><th colspan="3">Installing the cover</th></tr>
<tr>
<td>(1) Align the power terminal cover with the position of the clasp of the bus seat. Press the power terminal cover to clasp and fix it.
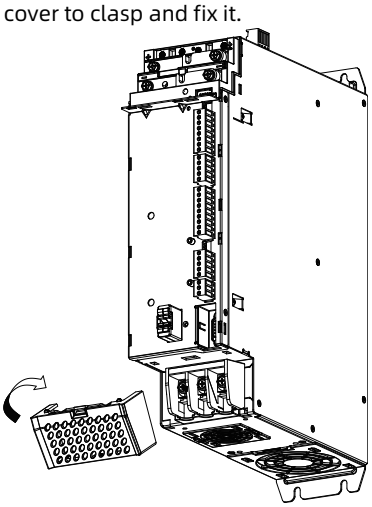</td>
<td>(2) Install the operating panel.
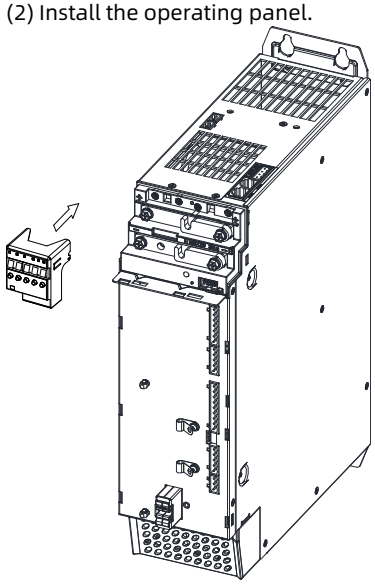</td>
<td>(3) Align the upper cover with the position of the clasp. Press the upper cover to clasp and fix it. Tighten the screw with a screwdriver.
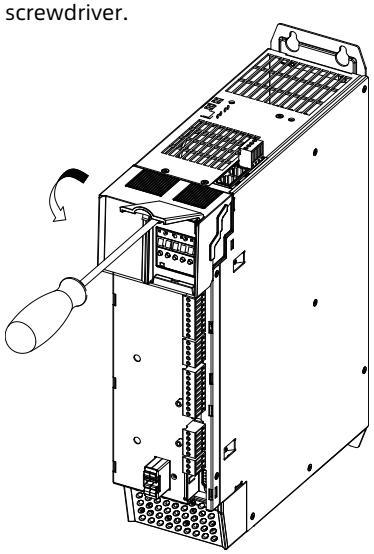</td>
</tr>
<tr>
<td>(4) Insert the top end of the lower cover below the upper cover. Turn the bottom end of the lower cover to clasp it.
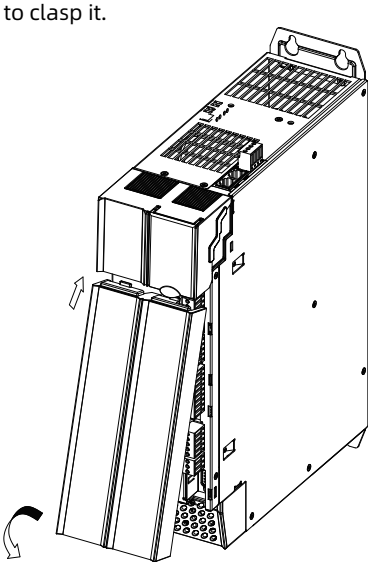</td>
<td>(5) The installation is completed.
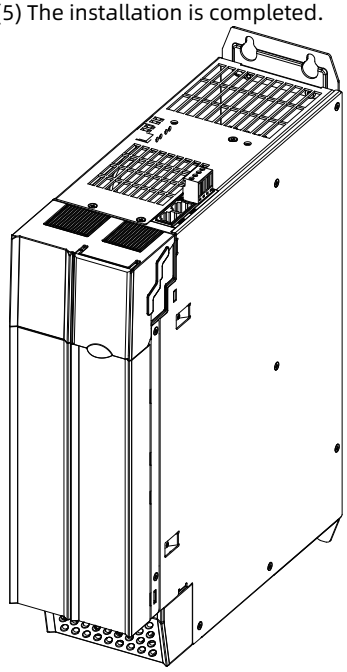</td>
<td></td>
</tr>
</table>

4.4.3.2 Inverter Unit

<table>
<tr><th colspan="3">Removing the cover</th></tr>
<tr>
<td>(1) Lift up the translucent operating panel cover. Loosen the screws in the upper cover with a screwdriver.
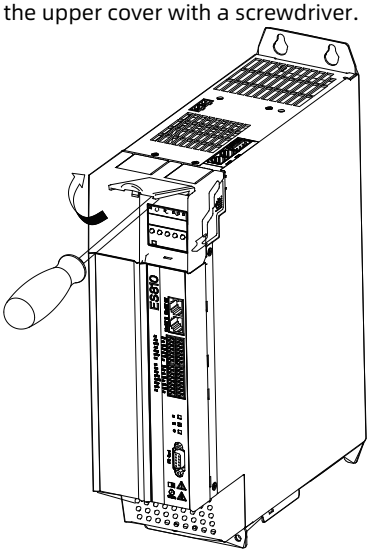</td>
<td>(2) Remove the upper cover by turning it frontward.
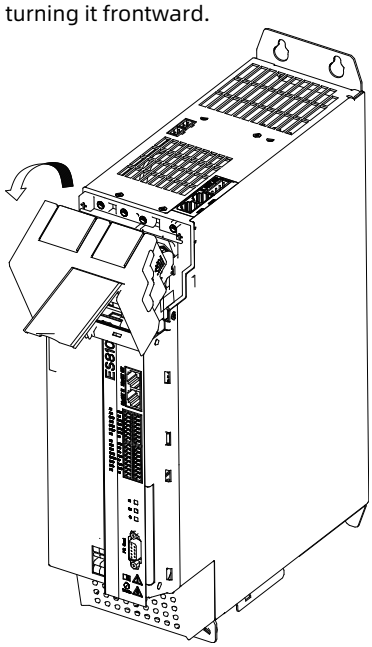</td>
<td>(3) Pull the whole operating panel box frontward.
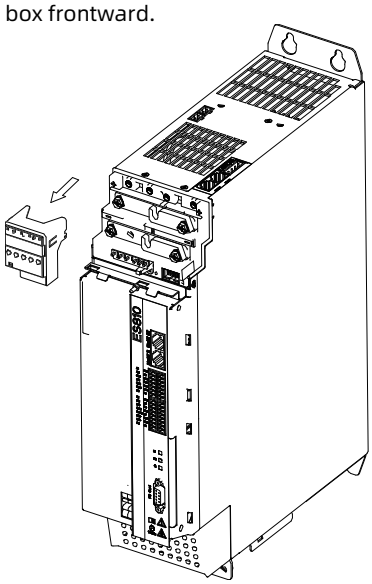</td>
</tr>
<tr>
<td>(4) Hold the bottom of the lower cover with your hands. Remove the lower cover by turning it forward.
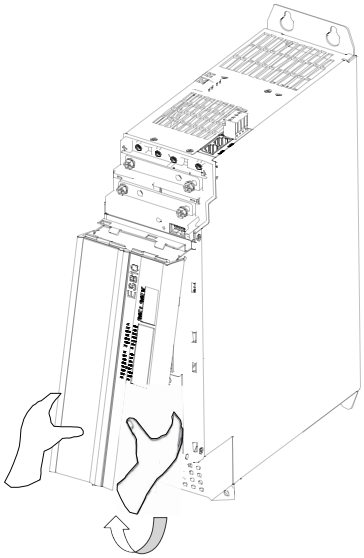</td>
<td>(5) Insert the tool (screwdriver) into the clasp of the power terminal cover. Pry the clasp.
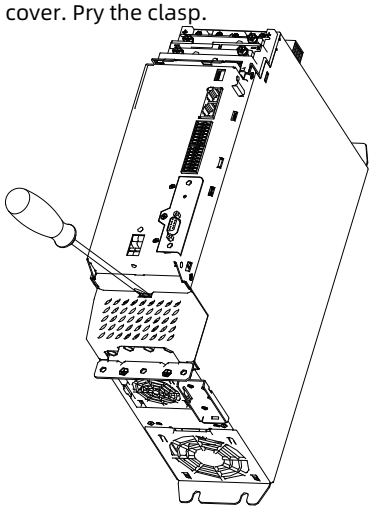</td>
<td>(6) Remove the power terminal cover.
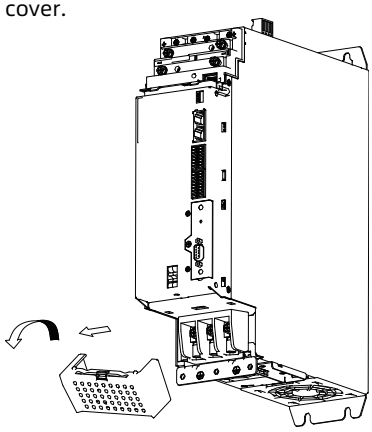</td>
</tr>
</table>

Installing the cover		
(1) Align the power terminal cover with the position of the clasp of the bus seat. Press the power terminal cover to clasp and fix it. 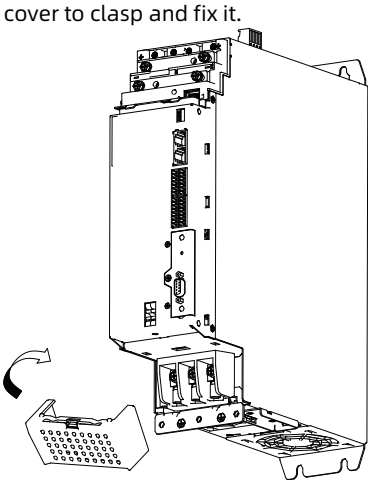	(2) Install the operating panel. 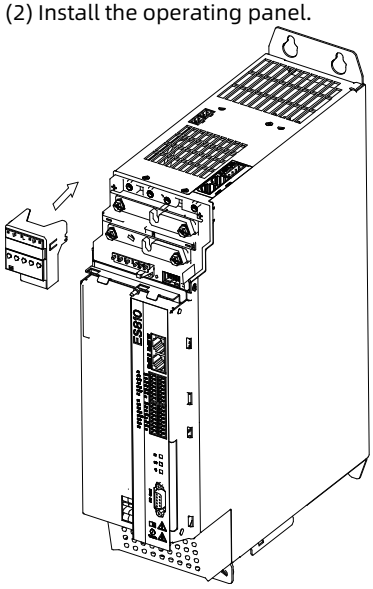	(3) Align the upper cover with the position of the clasp. Press the upper cover to clasp and fix it. Tighten the screw with a screwdriver. 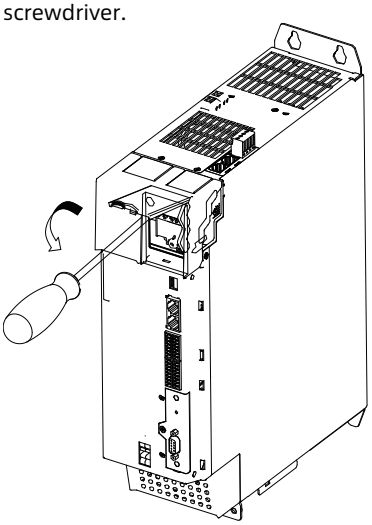
(4) Insert the top end of the lower cover below the upper cover. Turn the bottom end of the lower cover to clasp it. 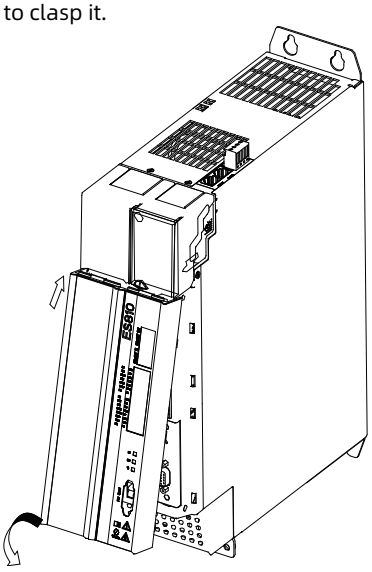	(5) The installation is completed. 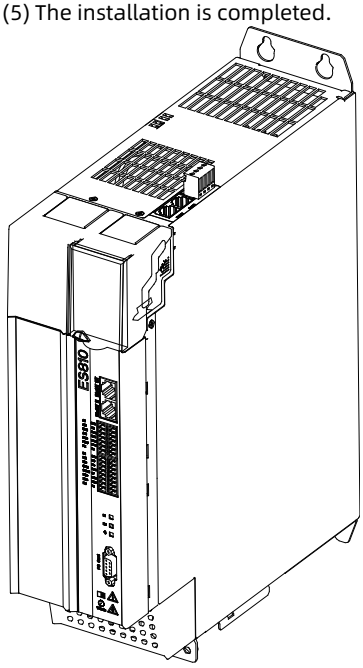	

4.4.4 Cabinet-mount Installation

4.4.4.1 Precaution

The installation method of this product in a cabinet supports single-row installation and two-row installation. The book type unit must be installed in close arrangement to avoid damage to the rectifier unit during transportation.

Single-rack installation

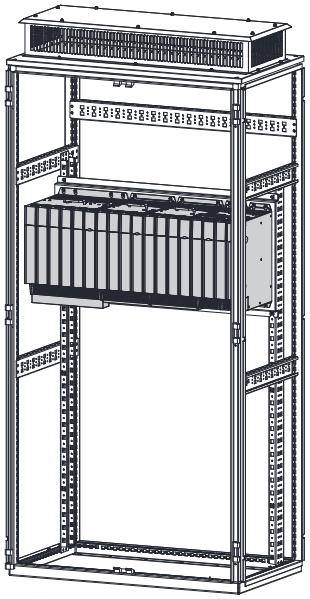

Dual-rack installation

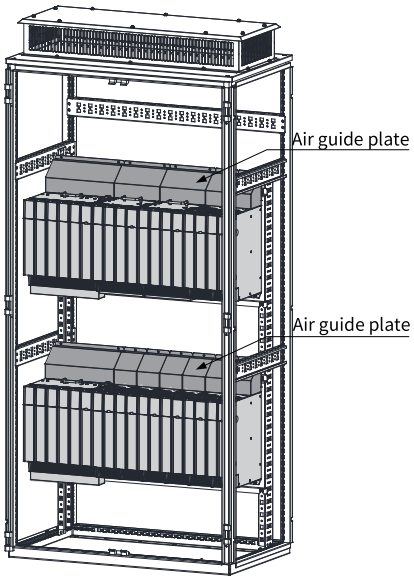

Note

- Optionally, install an air guide plate on the upper rack for dual-rack installation.
- Do not merely install two or fewer units.
- The through-hole mounting method supports only single-rack installation.

4.4.4.2 Installation Method

1. Pre-install the screws on the backplate.

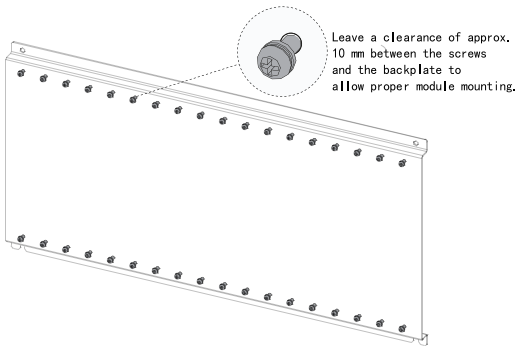

2. Remove the cover of the unit. For details, see *"4.4.3.1 Rectifier Unit" on page 58* and *"4.4.3.2 Inverter Unit" on page 60*.
3. Attach the rectifier unit and the inverter unit to the pre-installed screws one by one.

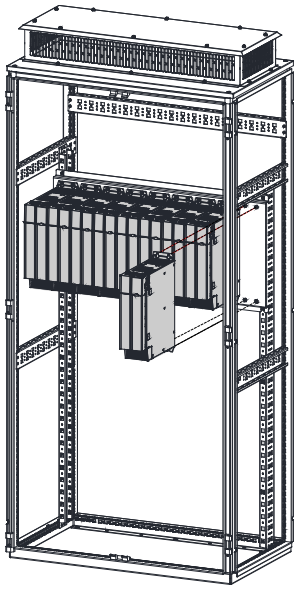

4. Install the EMC grounding aluminum busbar.
   To ensure proper system grounding, install grounding aluminum busbars between the mounting holes of adjacent inverter and rectifier units before fastening them to the mounting surface. Every two adjacent units must be connected by a grounding busbar.

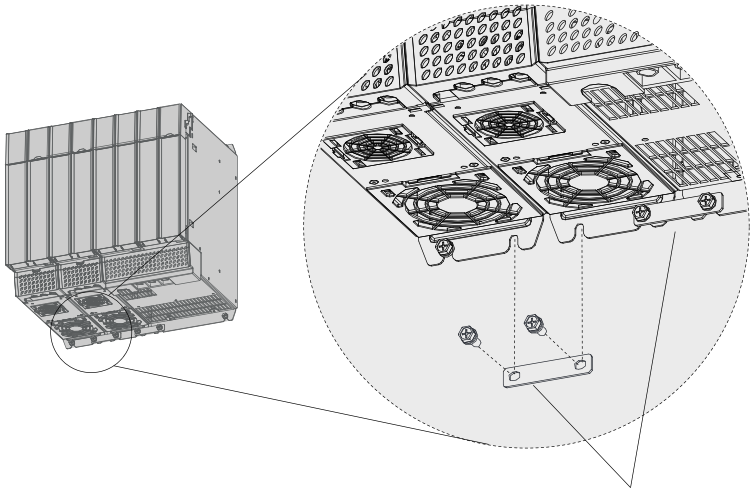

EMC grounding aluminum busbar (accessory, shipped as standard)
Connect each device in series using the EMC grounding aluminum busbar.

5. Tighten the mounting screws.
6. Connect the built-in busbar. Loosen and turn over the busbar, and fasten the screws.

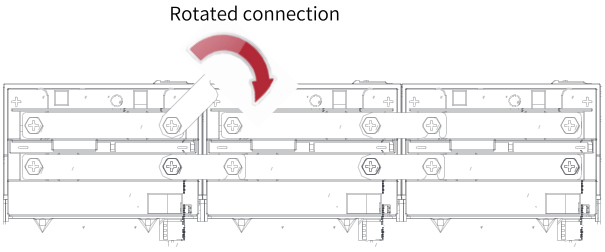

Note

- Before connecting the internal busbar, remove the left and right bus protective baffles of the top cover with tools such as needle-nose pliers or diagonal pliers. The following figure shows the position of the bus protective baffle.

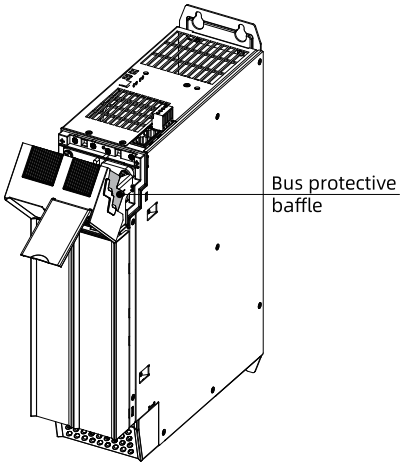

- When a row of units are installed, the left bus protective baffle of the leftmost unit and the right bus protective baffle of the rightmost unit must be reserved to prevent electric shock.

7. Connect the busbar inside the cabinet, and wire the common bus power terminals.

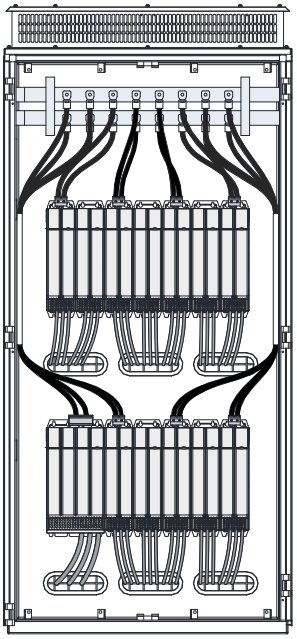

8. For wiring of the control cable and PE cable, see *"5.5 System Wiring Diagram" on page 71*.
9. For cover installation, see *"4.4.3.1 Rectifier Unit" on page 58* and *"4.4.3.2 Inverter Unit" on page 60*.
10. Install the ventilation hood (option).

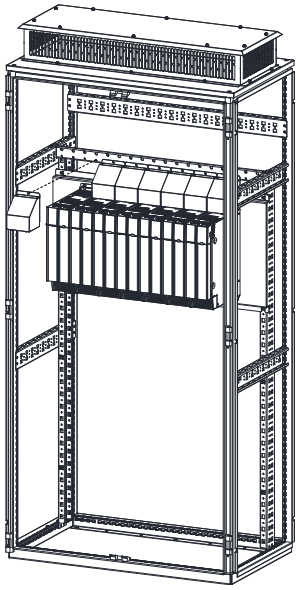

11. Installation is completed.

Auxiliary installation for cabinet-based transportation

The following principles must be followed before cabinet transportation to avoid damage to the product during transportation:

- The booksize unit must be installed in close arrangement. Do not install two or fewer sets and even separately install them.
- Install the crossbeam at the side for auxiliary fixing during the installation of the vertical tower unit, as shown in the following figure.
- Tap the screw on the installation backplate, and then use self-clinching nuts or independent nuts on the back of the backplate to enhance screw-thread fitting and fastening effect.
- The mounting backplate of the product must have enough stiffness and strength and a thickness of not less than 2 mm. Backplate reinforcement must be performed at the top and bottom mounting feet. For details of the recommended reinforcement scheme, see *"3.4.2 Mounting Backplate Design Requirements" on page 37*.

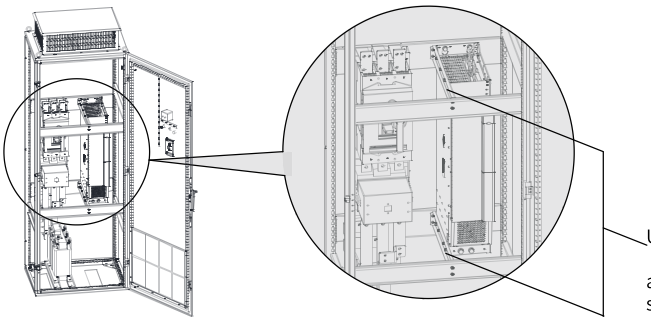

5 Electrical Installation

5.1 Safety Precautions

Failure to comply with the following safety precautions for wiring may lead to device damage, personal injury, or even death. Strictly follow the following safety precautions.



- This equipment must be operated only by trained and qualified electrical personnel. Non-professionals must not operate this equipment.
- Before wiring, disconnect all the power supplies of the equipment. Wait for at least the time designated on the warning label before further operations because residual voltage still exists after power-off. Measure the DC voltage of the main circuit and ensure that the voltage is within the safety range. Failure to comply can result in an electric shock.
- Do not perform wiring, remove the equipment cover, or touch the PCB with power on. Failure to comply may result in electric shock.
- Do not damage the cables, lay them under large tension or pressure, or hang them. Failure to comply may result in electric shock.
- Insulate the power terminal connectors to prevent electric shock.
- The specifications and installation method of external cables must comply with the applicable local regulations.
- Make sure that the equipment and product are grounded properly. Failure to comply can result in the risk of electric shock.
- After wiring is done, ensure that all cables are connected properly and no screws, washers or exposed cables are left inside the equipment. Failure to comply could result in electric shock or equipment damage.



- Carry out wiring correctly. Failure to comply will result in servo motor malfunction or physical injuries.
- Do not mistake the terminal connection. Failure to comply may result in damage to the terminals.
- Connect the electromagnetic contactor between the power supply and the main circuit of the drive to form a structure that can cut off the power supply on the servo drive power side. If no electromagnetic contactor is connected, a fire may occur when a fault occurs and continuous large current flows through the product.
- Before power-on, check the voltage specifications of the drive. Check whether the input power supply is correct.
- Use a noise filter to reduce electromagnetic interference on electronic devices around the product.
- When connecting the power supply and the main circuit, change the state of the servo drive from ON to OFF after an alarm signal is detected and before the main circuit power supply is cut off.
- Connect U, V, W cables of the servo drive to U, V, W terminals of the motor directly. Do not connect an electromagnetic contactor. Failure to comply may result in abnormalities and faults.

5.2 EMC Wiring Precautions

5.2.1 Typical Wiring Example

The servo drive uses high-speed switch elements in the main circuit. The noise generated by such switches may affect the normal operation of the system due to improper wiring or grounding.

Therefore, the servo drive must be wired and grounded properly. An EMC filter can be added if necessary.

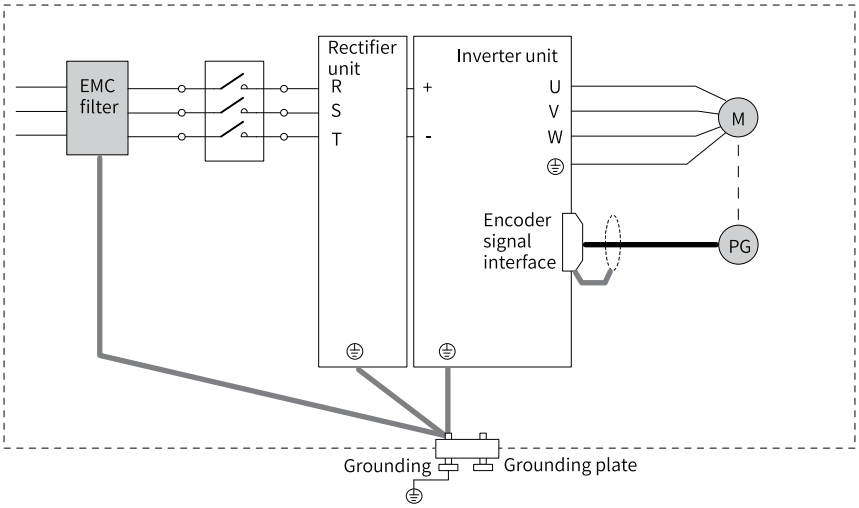

Figure 5-1 Star-type wiring

5.2.2 Use of the EMC Filter

To prevent interference from the power cable and reduce impact of the servo drive on other sensitive devices, install a proper EMC filter on the input side of the power supply according to the input current. In addition, install an EMC filter on the power supply cable of peripheral equipment if necessary. To ensure the performance of the EMC filter, abide by the following requirements when installing and wiring the EMC filter.

1. Do not place the input and output cables of the EMC filer in the same duct or bundle them together.

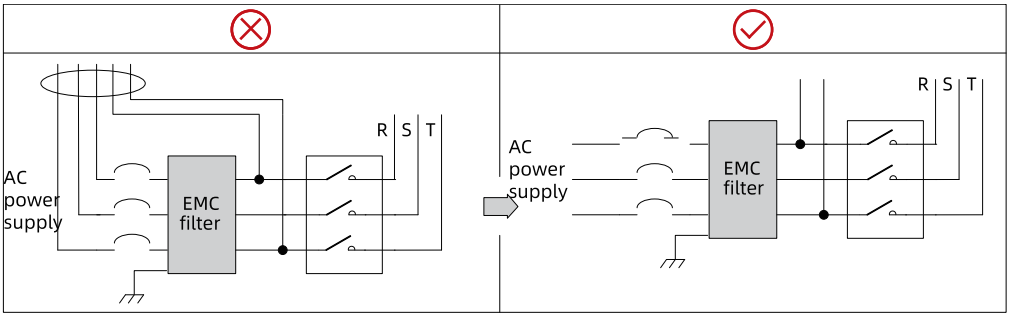

Figure 5-2 Separate routing of EMC filter input and output cables

2. Route the grounding cable and the output power cable of the EMC filter through different routes.

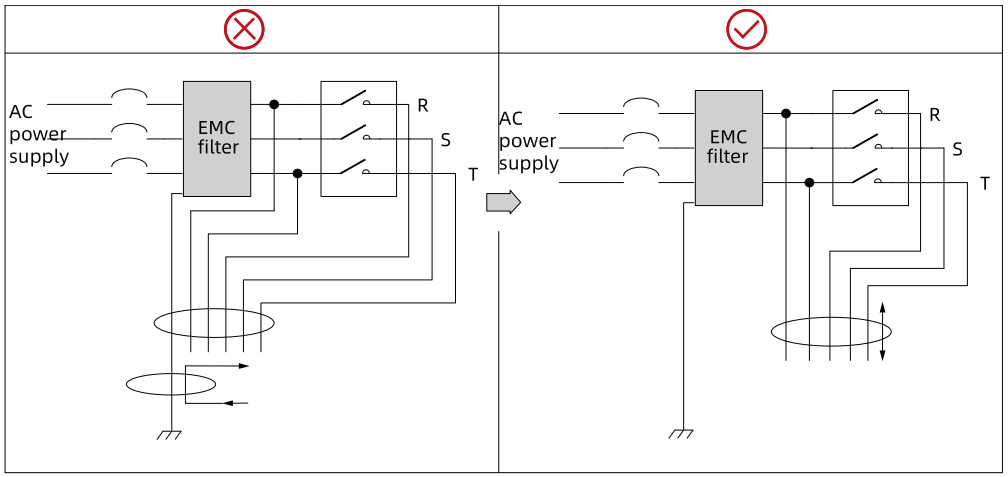

Figure 5-3 Separate routing of the grounding cable and output power cable

3. Use a separate grounding cable as short and thick as possible for the EMC filter. Do not share the grounding cable with other grounding devices.

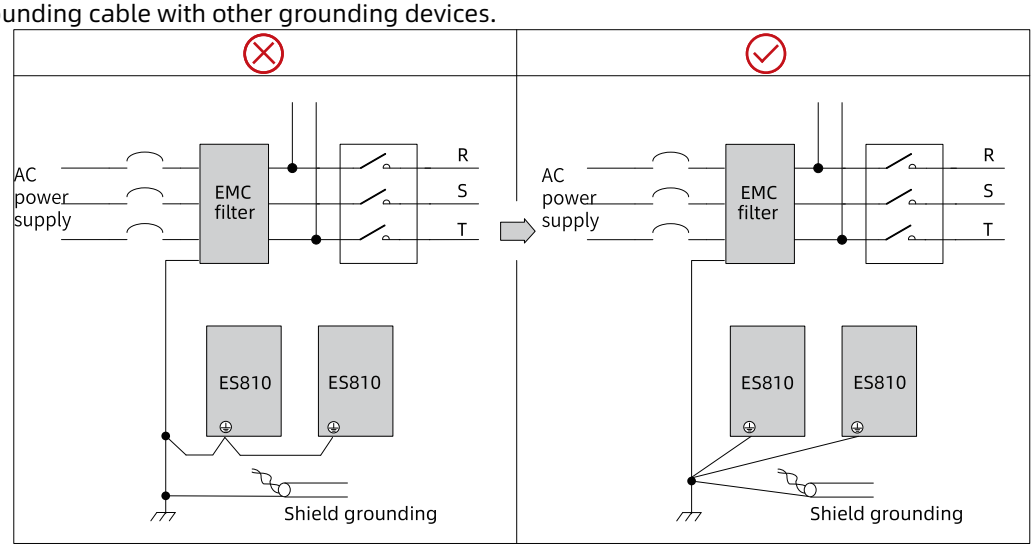

Figure 5-4 Single-point grounding

4. Ground the noise filter inside the control cabinet.

   If the EMC filter and the servo drive are installed in the same control cabinet, fix the EMC filter and the servo drive on the same metal plate. Make sure the contact part is in good conductive condition, and ground the metal plate properly.

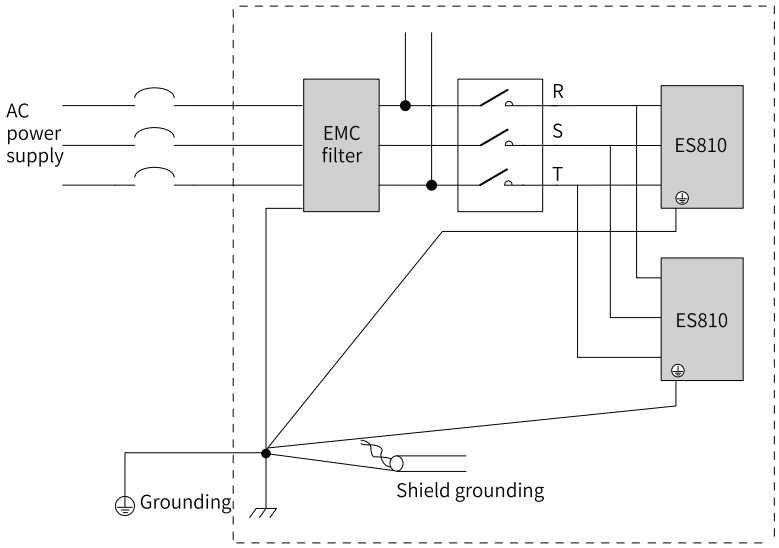

Figure 5-5 Grounding cable of the EMC filter

5.3 Wiring Precautions

- Do not bend or apply stress to cables. The core wire of a signal cable is only 0.2 or 0.3 mm thin. Handle the cables carefully.
- In cases where cables need to be moved, use flexible cables. Ordinary cables may be easily damaged after being bent for a long time. The built-in cables of low-power motors are not suitable for cable drag chain.
- Make sure that the following requirements are met when the cable drag chain is used.
  - The bending radius of the cable is at least 10 times its outer diameter.
  - Do not fix or bundle the cables inside the cable carrier. The cables can be bundled and fixed only at two unmovable ends of the cable drag chain.
  - Do not wind or twist the cable.
  - The space factor inside the cable drag chain cannot exceed 60%.
  - Do not route cables with significant size differences together, as thick cables may crush thin ones. If mixed routing is unavoidable, install dividers between the cables.

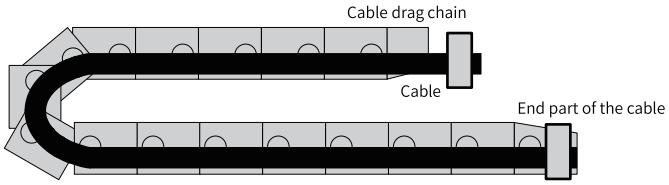

Figure 5-6 Cable drag chain

5.4 Pre-wiring Inspection

Complete the following inspection items before wiring.

No.	Item	Tick
1	Cables used during wiring comply with the requirements on the cross-sectional area and the shield.	□
2	The equipment and product are grounded properly.	□
3	Take proper electrostatic discharge (ESD) measures and wear an antistatic wrist strap.	□
4	Wiring-related options are available.	□

5.5 System Wiring Diagram

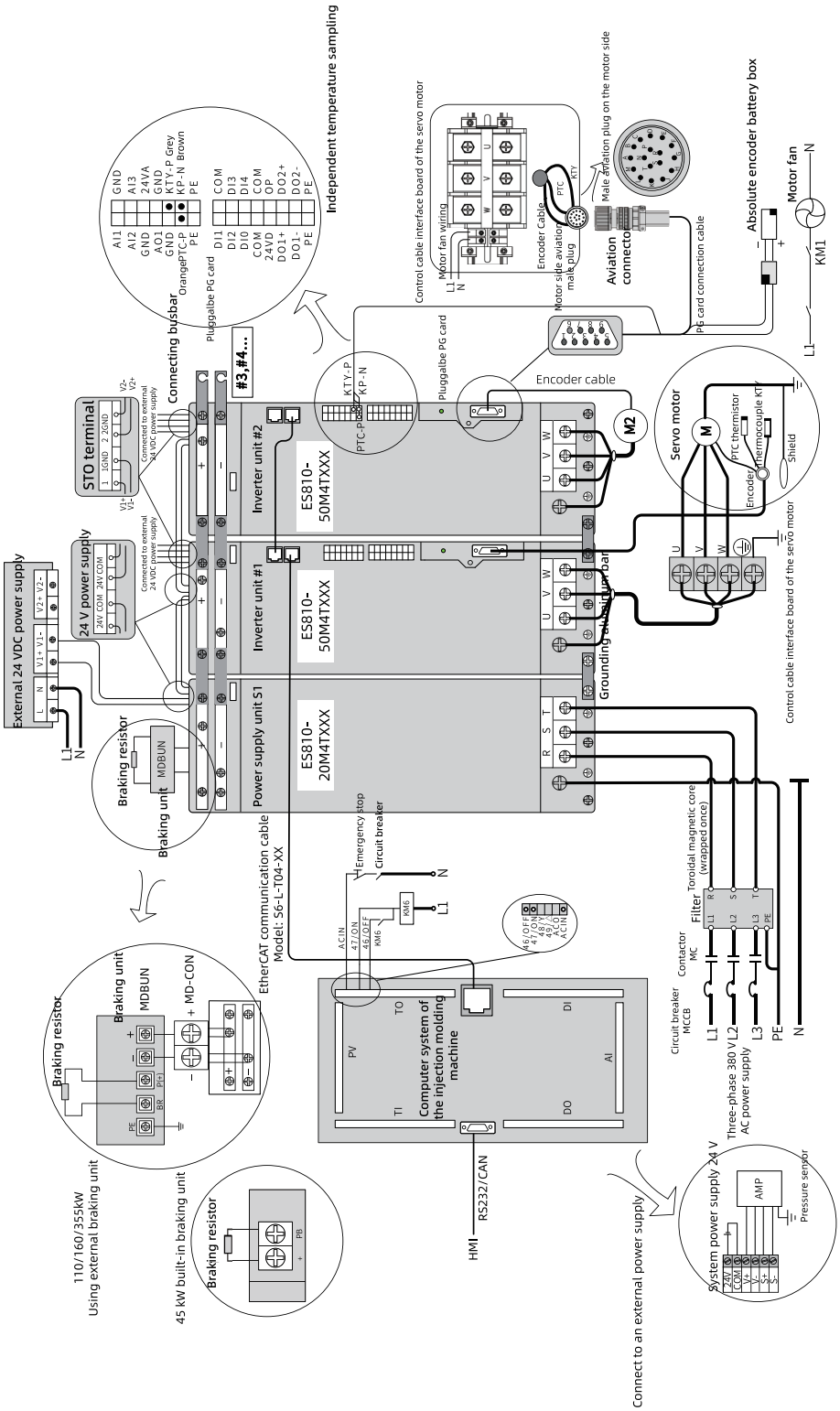

5.6 Main Circuit Wiring

5.6.1 Rectifier Unit

5.6.1.1 Main Circuit Cables of the Rectifier Unit

Main circuit cable selection

It is recommended to use symmetrical shielded cables as the input main circuit cables. Compared with four-core cables, symmetrical shielded cables can reduce electromagnetic radiation in the whole transmission system.

- Power cables recommended - symmetrical shielded cables

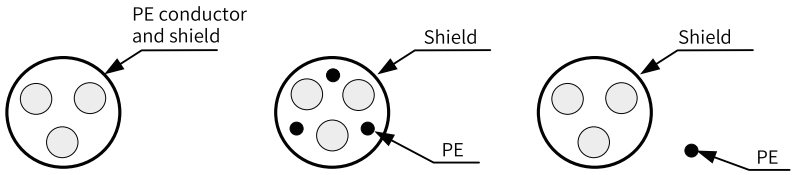

- Power cables not recommended

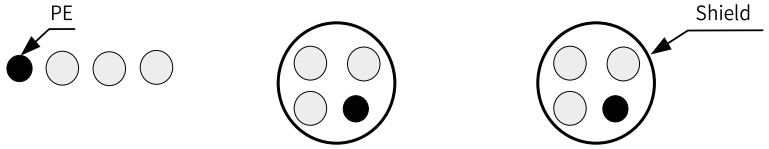

Recommended lug selection

The cable lugs manufactured by Suzhou Yuanli are recommended, as shown below.



GTNR series TNR series TNS series

5.6.1.2 Layout and Description of the Rectifier Unit Terminals

Layout of rectifier unit terminals

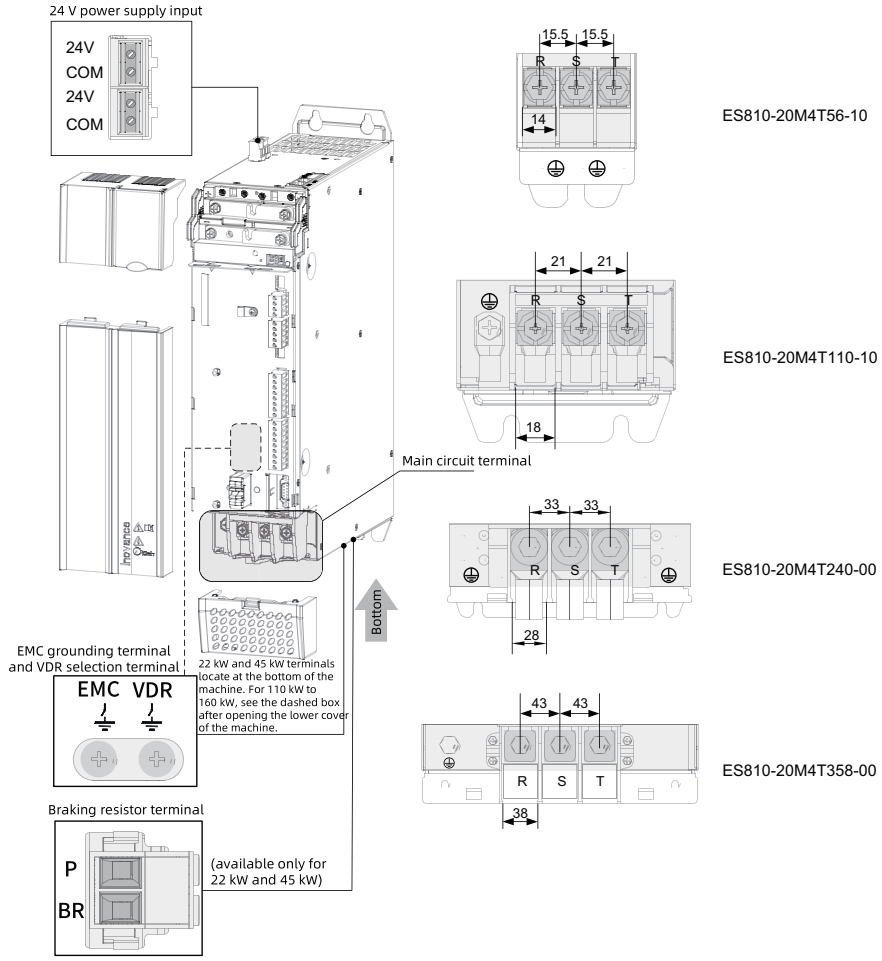

Figure 5-7 Layout and dimensions of rectifier unit terminals (unit: mm)

Table 5–1 Power cable selection of ES810 series rectifier unit

Rectifier unit model	Rated power (kW)	Input AC current (A)	Recommended input IEC Cable (mm^2)
ES810-20M4T56-10	22	59	10
ES810-20M4T110-10	45	112	25
ES810-20M4T240-00	110	196	95
ES810-20M4T358-00	160	292	150

Descriptions of rectifier unit terminals

1. Input power supply R, S, T

- The cable connection on the input side of the rectifier unit has no requirements on the phase sequence.
- The specifications and installation method of external power cables must comply with local regulations and related IEC requirements.

- For wiring of power cables, select copper conductors of corresponding sizes according to the recommended power cable selection values in *"Table 5-1 Power cable selection of ES810 series rectifier unit" on page 73*.
- Install the filter close to the input terminals of the rectifier unit, and keep the connection cable shorter than 30 cm. Connect the grounding terminal of the filter and that of the rectifier unit together, and install the filter and the rectifier unit on the same conductive mounting surface. This mounting surface is connected to the main ground of the cabinet.

2. DC bus (+, -)

- Note that residual voltage exists at the DC bus terminals (+, -) just after power-off. After the CHARGE indicator goes off, wait for at least 10 minutes before wiring. Failure to comply may result in electric shock.
- Note that + and - must be connected correctly when an external braking component is used for rectifier units of 45 kW. Failure to comply can damage the rectifier unit and braking component and even cause a fire.
- The wiring length of the braking unit cannot exceed 100 m. Use the twisted pair cables or closely-paired cables for parallel connection.
- Do not connect the braking resistor directly to the DC bus. Failure to comply may result in damage to the rectifier unit and even a fire.

3. 24 V external power supply system

This system is powered by an external 24 V power supply connected via the 24 V terminals on the top of the machine, and is composed of modules connected in series for cascading. After this system is connected, the control section of the entire system can operate normally without high voltage power applied. You can set parameters, query fault information and perform other operations, which greatly improves safety.

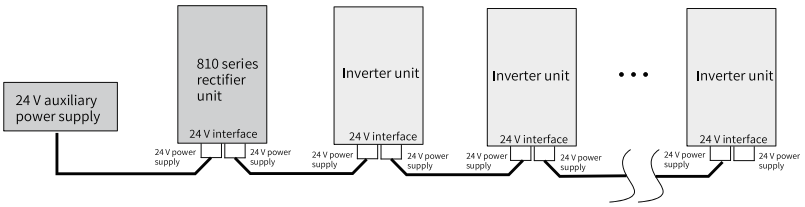

Note

- External 24 V power supply selection: 1 A current per unit
- The external 24 V power supply can be left unconnected, which does not affect normal use.

4. Braking resistor terminals BR and P (Built-in braking unit of 45 kW rectifier unit)

- Select the braking resistor according to the recommended values, and keep the wiring distance below 5 m. Otherwise, the rectifier unit may be damaged.
- Keep combustible objects away from the braking resistor to avoid burning of surrounding components due to resistor overtemperature.
- After connecting the braking resistor, set F9-08 according to the actual load.

5. Grounding terminal

- Ground the terminal reliably. Failure to comply may result in operation error, or even damage to the product.
- Do not share the grounding terminal with the neutral (N) terminal.
- The size of protective grounding conductors can be selected according to *"Table 5-1 Power cable selection of ES810 series rectifier unit" on page 73*.
- Use a yellow-green cable as the protective grounding conductor.
- It is recommended to install the rectifier unit onto a conductive metal surface, with the entire conductive bottom of the rectifier unit bonded properly with the mounting surface.
- Install the filter, the reactor, and the rectifier unit on the same mounting surface to ensure performance of the filter and the reactor.

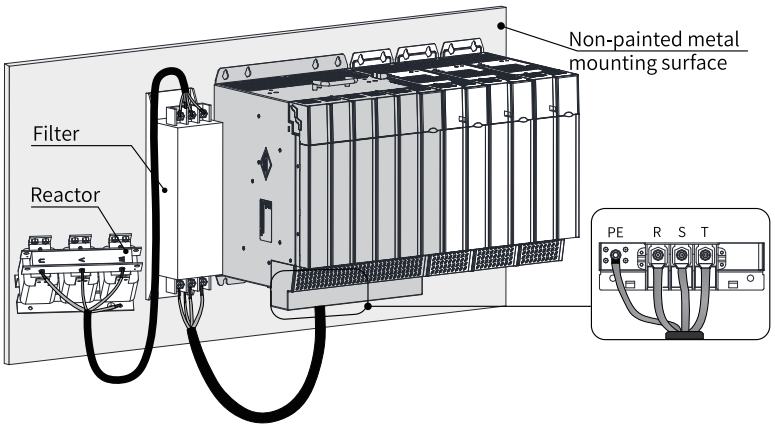

Figure 5-8 Protective grounding connection of main circuit terminals

6. VDR and EMC grounding jumper

Where a residual current circuit breaker is configured, if the residual current device trips during startup, remove the screw of the EMC grounding jumper. For positions of the VDR and safety capacitor (EMC) jumpers, see *"Figure 5-7 Layout and dimensions of rectifier unit terminals (unit: mm)" on page 73*.

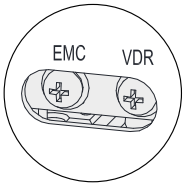

Figure 5-9 Positions of VDR and EMC grounding jumpers

5.6.2 Inverter Unit

5.6.2.1 Main Circuit Cables of the Inverter Unit

Table 5–2 Recommended Models and Specifications of Main Circuit Cables

Drive model	Recommended IEC Ground Cable (mm^2)	Recommended Output IEC Cable (mm^2)	Screw Specification	Recommended Torque (N·m)
ES810-50M4T005-xx	0.75	3 × 0.75	M5	2.8
ES810-50M4T009-xx	1.5	3 × 1.5	M5	2.8
ES810-50M4T013-xx	2.5	3 × 2.5	M5	2.8

Drive model	Recommended IEC Ground Cable (mm^2)	Recommended Output IEC Cable (mm^2)	Screw Specification	Recommended Torque (N·m)
ES810-50M4T017-xx	4.0	3 × 4.0	M6	4.8
ES810-50M4T025-xx	6.0	3 × 6.0	M6	4.8
ES810-50M4T032-xx	10.0	3 × 10.0	M6	4.8
ES810-50M4T037-xx	10.0	3 × 10.0	M6	4.8
ES810-50M4T045-xx	16.0	3 × 16.0	M6	4.8
ES810-50M4T060-xx	16.0	3 × 16.0	M6	4.8
ES810-50M4T075-xx	16.0	3 × 25.0	M6	4.8
ES810-50M4T091-xx	16.0	3 × 35.0	M10	20
ES810-50M4T112-xx	25.0	3 × 50.0	M10	20
ES810-50M4T150-xx	35.0	3 × 70.0	M10	20
ES810-50M4T200-xx	50.0	3 × 95.0	M12	35
ES810-50M4T240-xx	60.0	3 × 120.0	M12	35

5.6.2.2 Layout and Description of the Inverter Unit Terminals

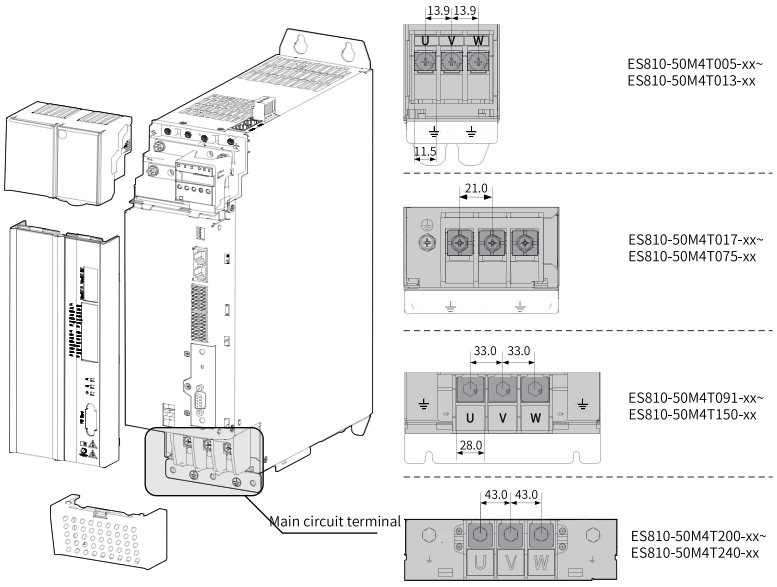

Figure 5-10 Layout and dimensions of the inverter unit main circuit terminals (unit: mm)

Symbol	Name and Function
+, –	DC bus terminal
U, V, W	Three-phase AC output terminals
⏚	PE grounding terminal

5.7 Control Circuit Wiring

5.7.1 Rectifier Unit

5.7.1.1 Control Circuit Cables of the Rectifier Unit

Control circuit cable selection

- All control circuit cables must be shielded cables.
- It is recommended to use shielded twisted pair (STP) cables as digital signal cables.

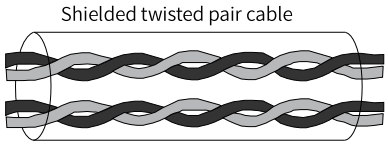

Figure 5-11 Shielded twisted pair cables

Wiring of the control circuit

- Lay the motor cables far from all control cables.
- Route the motor cable, the input power cable, and the control circuit cable through different routes. Avoid long-distance parallel routing of the motor cables and control cables, therefore reducing electromagnetic interference caused by coupling.
- When the control circuit and the drive cable must be cross-connected, the cross-connection angle must be 90 degrees.

The following figure shows the recommended cabling.

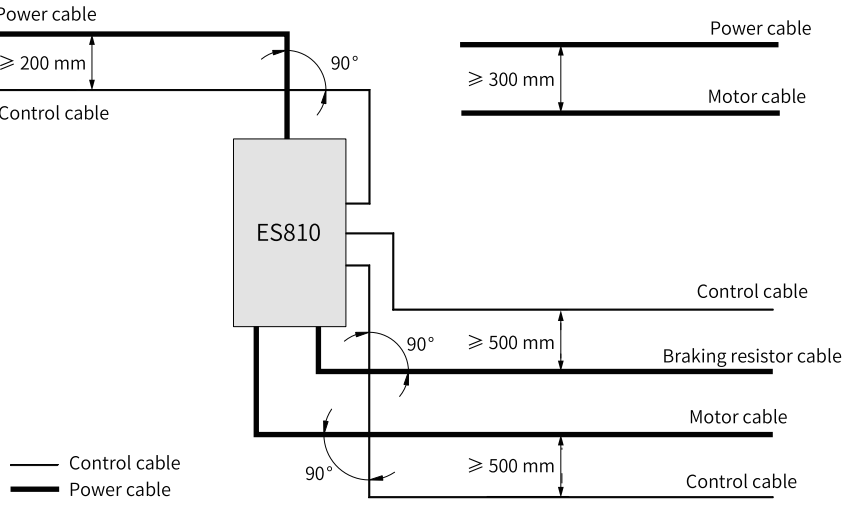

Figure 5-12 Recommended cabling

5.7.1.2 Layout and Description of the Rectifier Unit Terminals

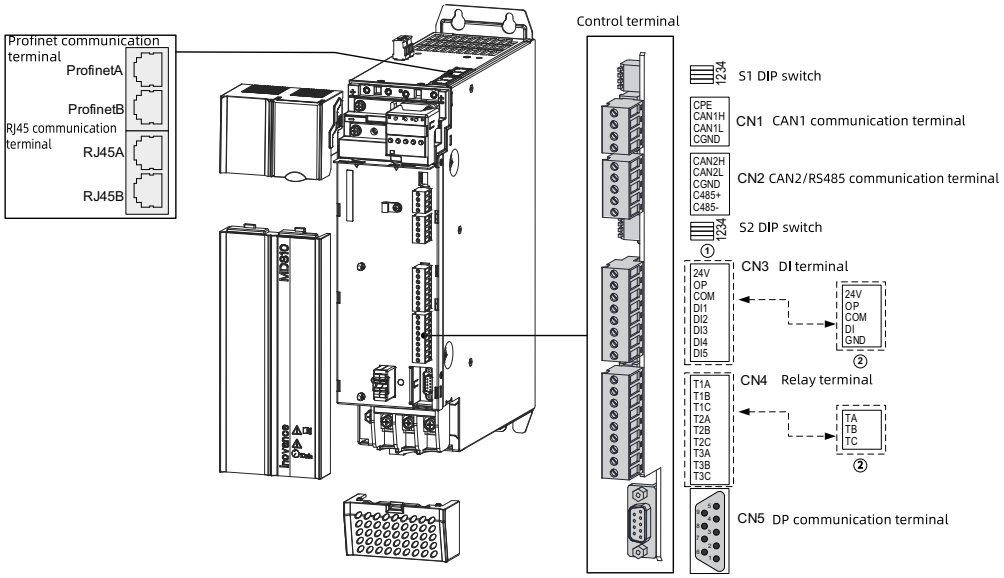

Figure 5-13 Layout of control circuit terminals in the rectifier unit

Note

- The new version of control terminals CN3 and CN4 are changed from ① to ②. Other terminals remain the same.
- PROFINET communication terminals of the rectifier unit are optional.

Table 5–3 Definitions of control circuit terminals

Type	Name		Function	Performance	
PROFINET communication interface (PROFINET A and PROFINET B)	1	TX+	Data transmitting+	The yellow indicator indicates that the link has been established properly. The green indicator indicates that the signal is normal.	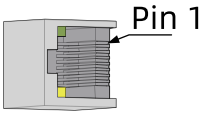
	2	TX-	Data transmission-		
	3	RX+	Data receiving+		
	6	RX-	Data receiving-		
RJ45 communication terminal (RJ45A/RJ45B)	1	CAN1H	CAN_H signal of CAN communication	CANopen/CANlink communication protocol supported.	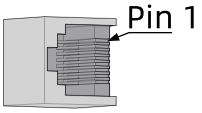
	2	CAN1L	CAN_L signal of CAN communication		
	3	CGND	CAN communication signal ground		
	4	RS485+	RS485 communication signal (+)	RS485 internal bus, used for the external LCD operating panel and PC commissioning	
	5	RS485-	RS485 communication signal (-)		
	6	CGND	RS485 communication signal ground		
	7	C7V	External LCD operating panel power supply	Connected to the external LCD operating panel. Note: This pin is not available for RJ45A.	
CANopen/ CANlink (CN1)	CAN1H		CAN_H of CAN communication signal	CANopen/CANlink communication protocol supported. CAN1 external terminal of RJ45	
	CAN1L		CAN_L signal of CAN communication		
	CGND		Communication common ground		
	CPE		Network cable shield		
Synchronous CAN and RS485 communication (CN2)	C485+		External RS485 communication signal (+)	Modbus communication protocol supported.	
	C485-		External RS485 communication signal (-)		
	CAN2H		CAN_H signal of CAN communication	CAN for synchronous control	
	CAN2L		CAN_L signal of CAN communication		
	CGND		Common ground of communication	-	

Type	Name	Function	Performance
DI terminal (CN3)	DI1 to DI5/DI	Common multi-function input terminal	Programmable terminal for isolated sink/source input; operating voltage range: 9 V to 30 V; ineffective voltage: < 5 V; input impedance: 3 kΩ; response time: meeting the requirements for 100 Hz frequency input Note: The new control board has one DI terminal (DI), whereas the old control board has five DI terminals (DI1 to DI5).
	OP	Common terminal of multi-function input terminals	Internally isolated from COM and 24 V. Shorted to 24 V via a U-shaped jumper by default.
	24 V	24 V power supply provided onboard	24 V±10%; no-load voltage: ≤ 30 V; maximum output current: 200 mA; internally isolated from OP/CGND/GND
	COM	24 V ground onboard	Internally isolated from CGND and GND
	GND	Power supply reference ground	Note: This terminal is available on the new control board.
Relay output terminal (CN4)	T1A/T1B/T1C T2A/T2B/T2C T3A/T3B/T3C TA/TB/TC	T1A-T1B, T2A-T2B, T3A-T3B, and TA-TB: Normally closed; T1A-T1C, T2A-T2C, T3A-T3C, and TA-TC: Normally open	Contact capacity: 250 VAC/3 A (COSϕ = 0.4) Note: The new control board only provides the TA/TB/TC terminal.
PROFIBUS-DP communication terminal (CN5)	Not connected	-	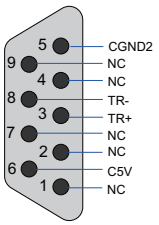
	Not connected	-	
	TR+	PROFIBUS-DP bus (+)	
	Not connected	-	
	CGND2	PROFIBUS-DP bus power supply ground	
	C5V	PROFIBUS-DP bus power supply	
	Not connected	-	
	TR-	PROFIBUS-DP bus (-)	
	Not connected	-	

Table 5–4 Definition of DIP switches of the rectifier unit

Mark	Name	Description	Position
S1	RS485 termination resistor selection	1 and 2 set to ON: Termination resistor connected	
		1 and 2 set to OFF: Termination resistor disconnected	
	CAN1 termination resistor selection	3 and 4 set to ON: Termination resistor connected	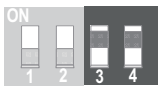
		3 and 4 set to OFF: Termination resistor disconnected	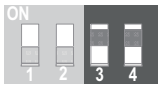
S2	C485 termination resistor selection	1 and 2 set to ON: Termination resistor connected	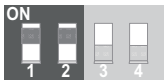
		1 and 2 set to OFF: Termination resistor disconnected	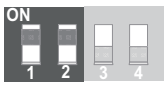
	CAN2 termination resistor selection	3 and 4 set to ON: Termination resistor connected	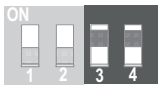
		3 and 4 set to OFF: Termination resistor disconnected	

5.7.1.3 Wiring of the Rectifier Unit Control Circuit

Wiring of the DIs

The DI can be wired in the sink mode (NPN) or source mode (PNP).

Sink wiring

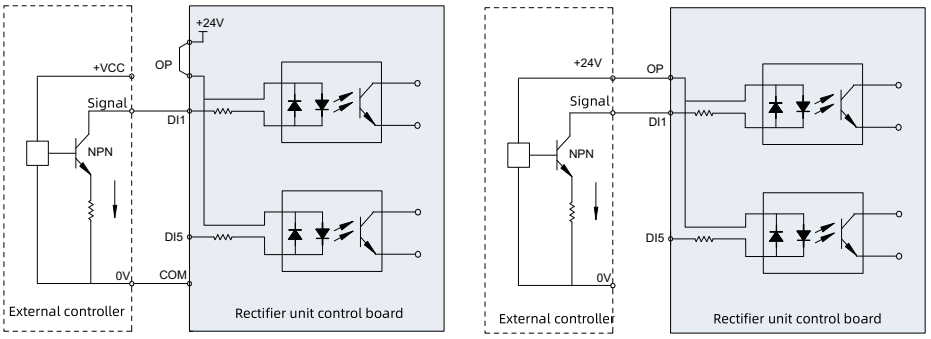

Sink wiring with internal 24 V power supply of the rectifier unit

Sink wiring with external 24 V power supply

Figure 5-14 Sink wiring

Wiring with the internal 24 V power supply of the rectifier unit is the most commonly used method in which the OP of the rectifier unit is shorted to the 24 V terminal and the COM terminal of the rectifier unit is connected to the 0 V of the external controller.

If an external 24 V power supply is used, the jumper between the +24 V and the OP must be removed, the 24 V positive electrode of the external power supply must be connected to the OP terminal, and the 0 V of the external power supply is connected to a corresponding DI terminal via the controller contact.

Source wiring

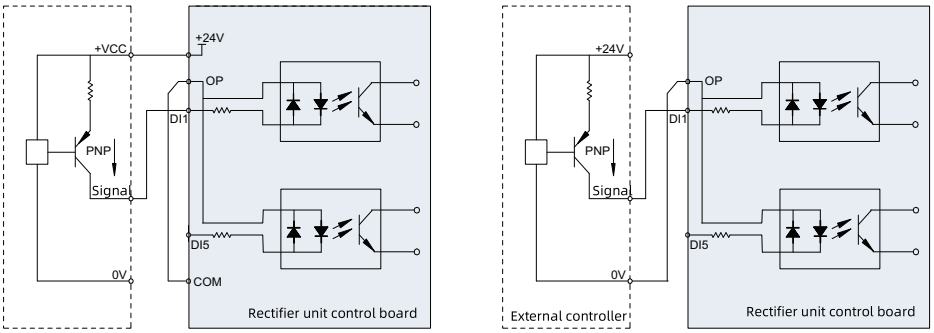

Source wiring with internal 24 V power supply of rectifier unit

Source wiring with external 24 V power supply

Figure 5-15 Source wiring

To use the internal 24 V power supply of the rectifier unit, remove the jumper between the +24V and OP terminals, connect the OP terminal to the COM terminal, and connect the +24V terminal of the drive to the common terminal of the external controller, as shown in the following figure.

To use an external power supply, remove the jumper between the +24V and the OP terminals, connect the OP terminal to the 0V terminal of the external power supply, and connect the 24 V positive electrode of the external power supply to the corresponding DI through the external controller contact.

Relay output terminal

The inductive load (relay, contactor, and motor) causes voltage peak after the current is cut off. To minimize the interference at cutoff, use a voltage dependent resistor (VDR) at the relay contact for protection and install absorption circuits such as VDRs, RC absorption circuits, and diodes on the inductive load.

When contactors and intermediate relays are supplied with 220 VAC, a VDR must be connected in parallel across their drive coils, and the VDR must have a withstand voltage rating greater than 275 VAC. When contactors and intermediate relays are supplied with 24 VDC, a flywheel diode must be reversely connected in parallel across their drive coils. That is, the cathode of flywheel diode must be connected to the 24 V side of the drive coil, and the anode must be connected to the non-24 V side of the drive coil.

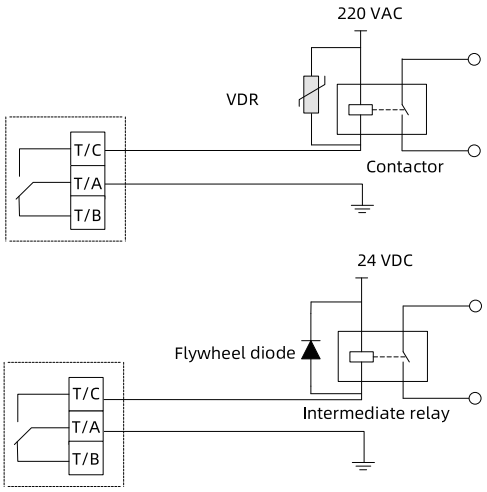

Figure 5-16 EMC measures for relay output terminals

Warning

- If relay output terminals are connected to 220 V voltage, pay attention to distinguishing them from the surrounding safety extra-low voltage circuit terminals to avoid mis-connection. The requirements for reinforced insulation must be taken into consideration during wiring.
- The external 220 V power supply of the relay must be used in an overvoltage category II (OVCII) environment.

DI/DO terminals

DIO1 and DIO2 can be used as DI or DO terminals. The current specific function depends on the F4-41 parameter settings. DIO1 and DIO2 are DI terminals by default. Note that DIO1 and DIO2 cannot be used as DI and DO terminals at the same time.

When they are used as DI terminals, the wiring method is consistent with the preceding DI1-DI2. When DIO is used as DO, DO common terminal is COM and only the sink wiring method is supported, as shown in the following figure. Connect the DI common point OP of DIO to 24V. Do not connect OP to COM; otherwise, the user equipment will receive the input signal by mistake when the DIO terminal has no output.

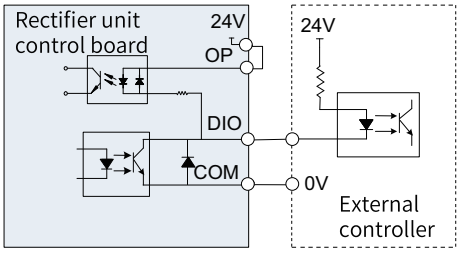

Figure 5-17 Wiring of the DO terminal

5.7.2 Inverter Unit

5.7.2.1 Control Circuit Cables of the Inverter Unit

Type	Model
Absolute encoder cables	ES-P21-4
	ES-P21-5
	ES-P21-6
	ES-P21-8
	ES-P21-10
	ES-P21-12
	ES-P21-15
	ES-P21-20

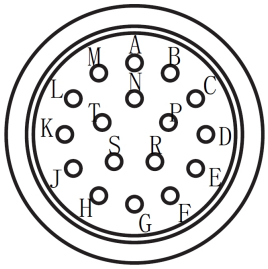

Figure 5-18 Aviation plug soldering side

Table 5–5 Relationship between the aviation female plug and DB9P male connector

End A (17-pin aviation plug)	A	B	C	D	E	F	G	H	K	L		M	J
End B (DB9P male connector)	1	2	/	/	/	/	7	8	/	/		/	Enclosure
2P	/	/	/	/	1	2	/	/	/	/		/	/
Tag	/	/	/	/	/	/	/	/	/	/	KP-N	KTY-P	/
Conductor color	Green	Green/ black	/	/	Red	Black	Yellow	Yellow/ Black	Brown	Gray/ Brown	Gray/ Orange	Orange	Shield
Signal assignment	PS+	PS-	/	/	VB+	VB-	+5 V	GND	/	/	KP-N	KTY-P	Shield
Remarks	One pair		/	/	One pair		One pair		One pair		One pair		/

5.7.2.2 Layout and Description of the Inverter Unit Terminals

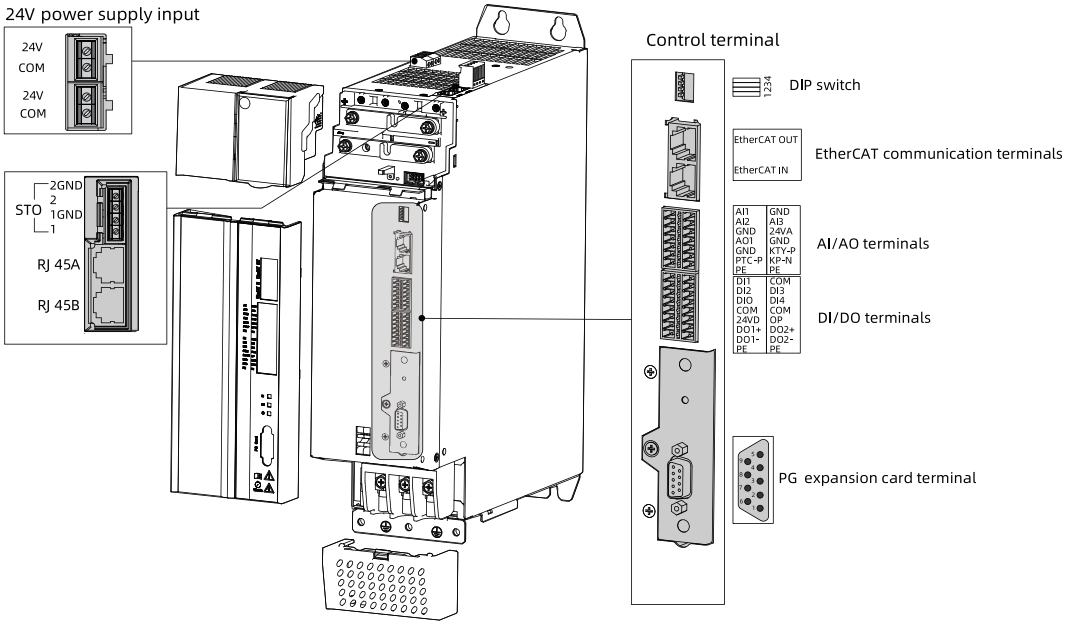

Figure 5-19 Layout of the inverter unit control circuit terminals

Table 5–6 Definitions of control circuit terminals

Type	Name	Description	Performance
STO terminal	1	STO channel 1 power supply+	• Recommended input voltage: 24 VDC • Input voltage range: 12 VDC to 30 VDC • Input current range: < 50 mA
	1GND	STO channel 1 power supply-	
	2	Power supply+ of STO2	
	2GND	Power supply- of STO2	
24 V power supply input	24 V	External 24 V control power and brake power input	• Recommended input voltage: 24 VDC • Input voltage range: 20 VDC to 30 VDC • Input current: 1.5 A
	COM		

Type		Name	Description	Performance
DI/DO terminals	DI terminal	DI1 to DI4	Digital input terminal	• Programmable terminal for isolated sink/source input • Input frequency < 100 Hz • Input voltage range: 15 V to 30 V • Input current range: < 20 mA
	DO terminal	DO1+/- DO2+/-	Digital output terminal	• Programmable terminal for Isolated sink/source output: driven by internal or external 24 V • Output current range: < 50 mA
	Digital input/ output terminal	DIO	Digital input/ output terminal	• Used as DI5 or DO3 • DI5: Programmable terminal for isolated sink/source input • Input frequency < 100 Hz • Input voltage range: 15 V to 30 V • Input current range: < 20 mA • Used as DO3: Sink/source output programmable terminal without isolation; driven by internal 24 V power supply; COM as the reference ground • Output current range: < 50 mA
	Digital power supply terminal	24VD	24 V digital voltage output	24 V ± 10%; no-load voltage: ≤ 30 V; maximum output current: 200 mA
		OP	Multi-functional digital input common terminal	• Voltage range: 15 V to 25 V • Output current range: < 100 mA
		COM	Digital ground	Internally isolated from GND
AI/AO terminals	AI terminal	AI1 to AI2	Analog input terminal	Programmable; -10 V to +10 V; 12-bit resolution
		AI3	High-accuracy AI	Programmable; supports the voltage mode (0 V to 10 V) or the current mode (0 mA to 20 mA), which is set by parameters; 16-bit resolution
	AO terminal	AO1	Analog output terminal	Supports the voltage mode (0 V to 10 V) or the current mode (0 mA to 20 mA), which is set by parameters; 12-bit resolution; maximum load resistance: < 500 Ω
	Analog power supply terminal	24 VA	24 V analog voltage output	• 24 V ± 10%; maximum output current: 10 mA • Typically used to power the pressure sensor
		GND	Analog ground	Internally isolated from COM.
	Motor temperature sampling terminal	KTY-P	KTY resistance input	Supports KTY, PT1000, and PT100, which can be switched by parameters; default: KTY84-130
		KP-N	KTY and PTC common terminal	-
		PTC-P	PTC resistance input	• PTC temperature protection • Resistance ≥ 2.69 kΩ: Protection function enabled; resistance ≤ 2.4 kΩ: Protection function disabled

Table 5–7 DIP switch definitions

Name	Function	DIP Switch Digit
PROFIBUS terminal matching resistor selection	1 and 2 set to ON: Connect the termination resistor.	
	1 and 2 set to OFF: Disconnect the termination resistor.	
CAN termination resistor selection	3 and 4 set to ON: Termination resistor connected	
	3 and 4 set to OFF: Termination resistor not connected	

5.7.2.3 STO Wiring and PG Expansion Card

STO terminal

The STO functional safety terminal is powered by 24 VDC power supply. The STO function can be enabled by a bipolar disconnection device in the peripheral circuit. The disconnection device can be an emergency stop switch, safety PLC, etc.。

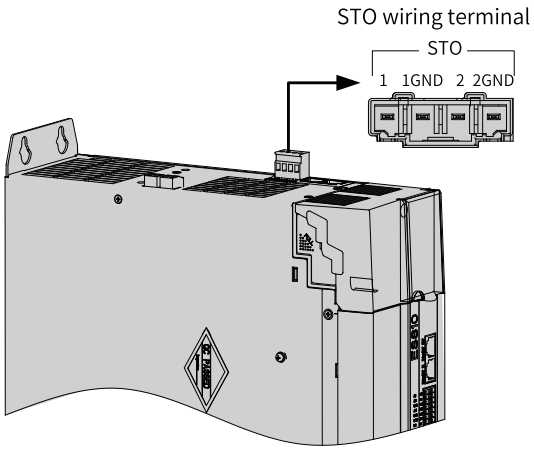

Figure 5-20 STO terminal layout

The STO terminal must be connected to an external 24 V power supply. The figure below shows the specific wiring method for each drive.

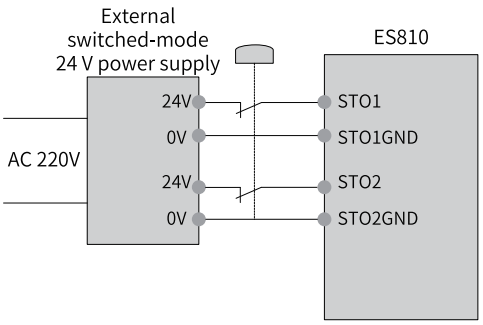

Figure 5-21 Wiring of the STO terminal

If the STO function is available for multiple drives, connect the STO terminal of every drive to an external 24 V switching-mode power supply. The following figure shows a wiring diagram in which the STO terminals of multiple drives are cascaded to share one external switching-mode power supply.

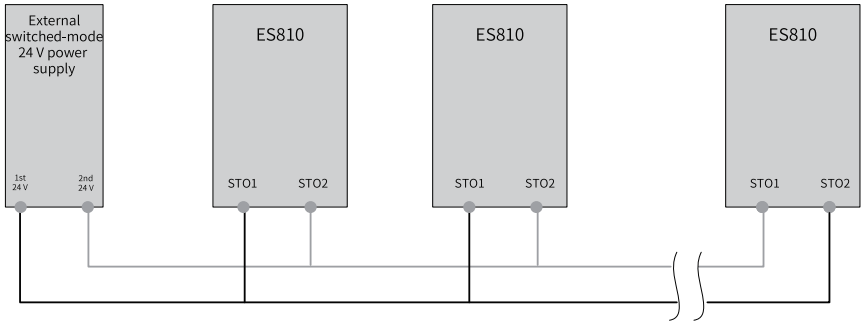

Figure 5-22 Wiring diagram in which the STO terminals of multiple drives are cascaded to share one 24 V power supply

PG-CT expansion card

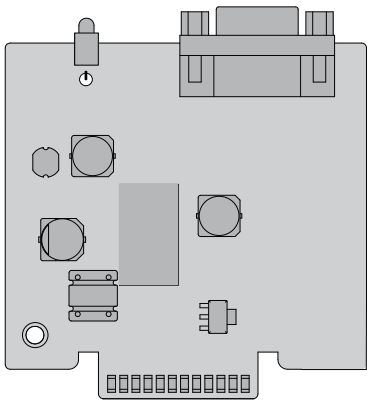

Figure 5-23 PG-CT expansion card diagram

Specifications of ES810-PG-CT	
User interface	DB9 (female)
Pluggable	Yes
Cable specifications	16AWG to 26AWG Use the shielded twisted pair for the power supply cable and differential signal cable
Communication baud rate	≤ 4 MHz
Minimum differential receive voltage of RS485	±200 mV
Communication cable length	20 m
Power supply voltage	4.75 V to 5.25 V
Differential voltage upon drive output	> 2 V (R = 50 Ω) > 1.5 V (R = 27 Ω)

Pin No.	Pin assignment	Description	Terminal layout (DB9 female)
1	PS+	Digital signal+	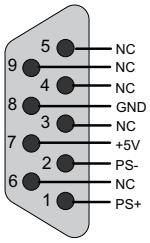
2	PS-	Digital signal-	
3	NC	Not connected	
4	NC	Not connected	
5	NC	Not connected	
6	NC	Not connected	
7	+5V	+5 V power supply	
8	GND	Reference ground	
9	NC	Not connected	
-	Enclosure	Shield	

5.7.2.4 Wiring of the Inverter Unit Control Circuit

Wiring of DI1 to DI4

The DI can be wired in the sink mode (NPN) or source mode (PNP).

Sink wiring

To use the internal 24 V power supply of the drive, which is the most commonly used method, short the OP terminal and 24VD terminal of the drive, and connect the COM terminal of the drive to the 0V terminal of the external host controller.

To use an external 24 V power supply, connect the +VCC terminal of the external power supply to the OP terminal, and connect the 0V terminal of the external power supply to a DI through the host control contact. (Note: Do not short the 24VD terminal and the OP terminal of the drive.)

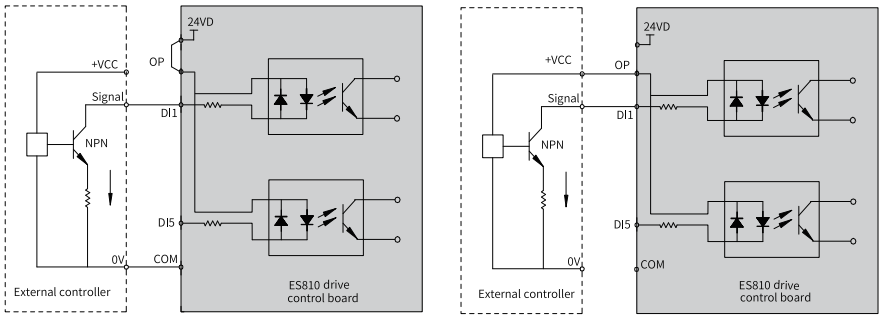

Figure 5-24 Sink wiring

Note

In the preceding figure, the +VCC and 0V terminals are those of the external 24 V power supply. The 24VD and COM terminals are those of the internal power supply.

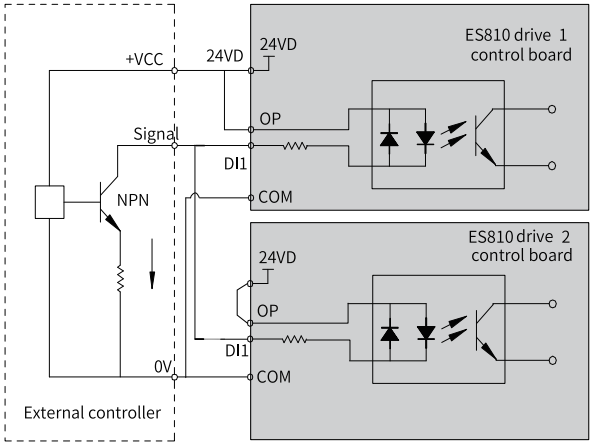

Figure 5-25 Parallel connection of DI terminals of multiple drives in sink mode

Note

In the preceding figure, the +VCC and 0V terminals are those of the external 24 V power supply. The 24VD and COM terminals are those of the internal power supply.

Source wiring

To use the internal 24 V power supply of the drive, connect the OP terminal to the COM terminal, and connect the 24VD terminal to the common terminal of the external host controller.

To use an external 24 V power supply, connect the OP terminal to the 0V terminal of the external power supply, and connect the +VCC terminal of the external power supply to a DI through the external host controller contact.

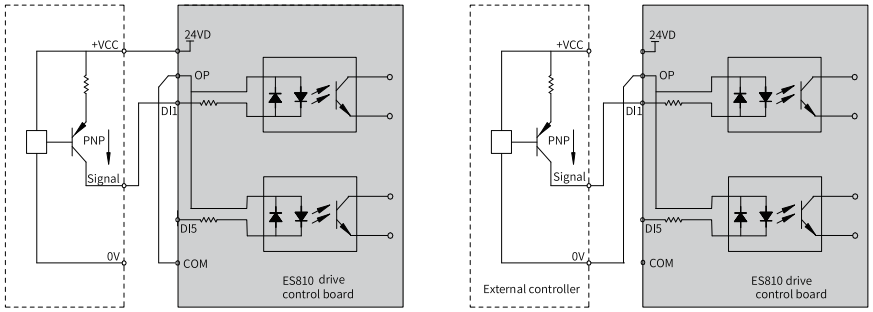

Figure 5-26 Source wiring

Note

In the preceding figure, the +VCC and 0V terminals are those of the external 24 V power supply. The 24VD and COM terminals are those of the internal power supply.

Do not short the 24VD terminal and the OP terminal of the drive.

DI/DO terminals

The DIO terminal can be used as the DI or the DO, The function is determined by the F03-36 parameter. By default, the DIO terminal is used as the DI. Note that the DIO terminal can be used as either the DI or the DO at the same time.

When the DIO terminal is used as the DI, the wiring method is the same as that of DI1 and DI4. When the DIO terminal is used as the DO, the common point of the DIO terminal is COM and only the sink wiring mode is supported, as shown in the following figure. Connect the DI common point OP to 24V. Do not connect OP to COM; otherwise, the user equipment will receive the input signal by mistake when the DIO terminal has no output.

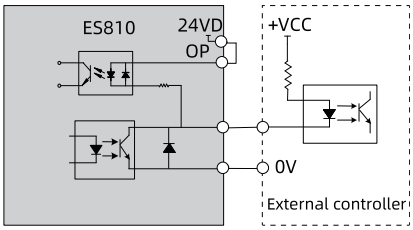

Figure 5-27 Wiring of the DIO terminal used as the DO

Note

In the preceding figure, the +VCC and 0V terminals are those of the external 24 V power supply. The 24VD and COM terminals are those of the internal power supply.

Analog input terminal

Wiring AI1 and AI2

AI1 and AI2 are 12-bit analog sampling terminals that support -10 V to +10 V voltage input. Weak analog voltage signals may be easily disturbed by external interference. Therefore, use shielded cable shorter than 20 m. AI1 and AI2 are used to receive analog commands from the host controller.

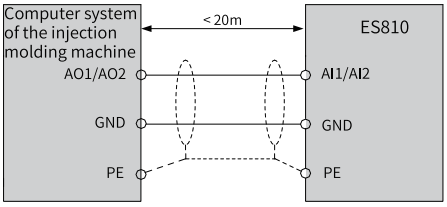

Figure 5-28 AI wiring

Connect the drain wire of the AI shield to the PE terminal on the drive side.

Wiring AI3

AI3 is the 16-bit high-resolution analog sampling terminal that supports 0 V to 10 V voltage input or 0 mA to 20 mA current input, which can be switched by H03-65 (0: voltage type; 1: current type). The AI3 is used to connect to the pressure sensor for pressure feedback input.

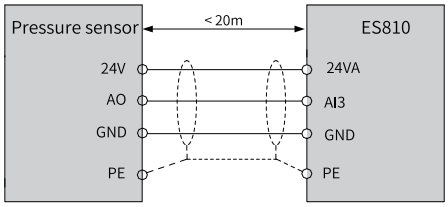

Figure 5-29 Wiring of AI3

Note

The AO indicates the analog output of the pressure sensor.

Analog output terminal

AO1 supports 0 V to 10 V voltage output and 0 mA to 20 mA current output.

By default, AO1 supports voltage output. In this mode, the load resistance must be larger than or equal to 5 kΩ, and the driving current must be smaller than 2 mA. When AO1 adopts the current output mode, the load resistance must be smaller than or equal to 500 Ω; otherwise, the linearity of the AO output will be distorted.

Weak analog voltage signals are easy to suffer external interference. Therefore, the shielded cable must be used and the cable length must be less than 20 m. In applications where the analog signal suffers severe interference, install a filter capacitor or ferrite magnetic core at the analog signal source.

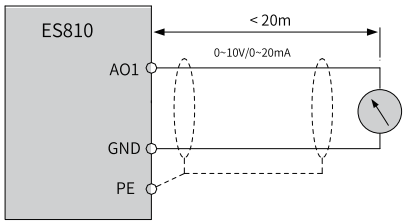

Figure 5-30 AO1 wiring

5.8 Grounding

Caution

- Ground the grounding terminal to avoid electric shocks. Follow the relevant electrical regulations of specific countries or regions on the grounding method.
- To prevent electric shocks, ensure the protective grounding conductor complies with technical specifications and local safety standards. Keep the grounding cable as short as possible.
- Grounding cables (except for motors) shall meet requirements of GB/T 12668.501 and EN 61800-5-1. In any case, the cross-sectional area of each protective grounding conductor that does not form part of the power cable or cable jacket cannot be less than 2.5 mm^2.
- The leakage current of a single drive does not exceed 3.5 mA AC or 10 mA DC. You only need to configure one protective grounding conductor with the same specifications as the phase cable.
- If the leakage current exceeds 3.5 mA, use the protective grounding conductor with the cross-sectional area of at least 10 mm^2 according to EN 61800-5-1, or connect with two protective grounding conductors of the same specifications.
- Observe the grounding requirements of all the devices as improper grounding can lead to malfunction.

Control Board Grounding

By default, the control board is grounded. When EMC interference exists, remove the grounding screws of the control board.

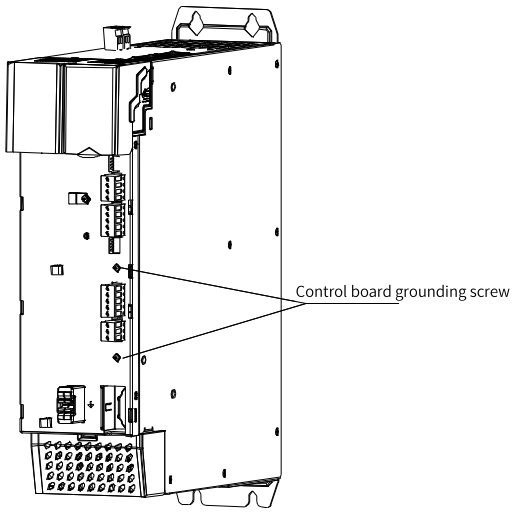

Figure 5-31 Grounding screw of the control board for the rectifier unit

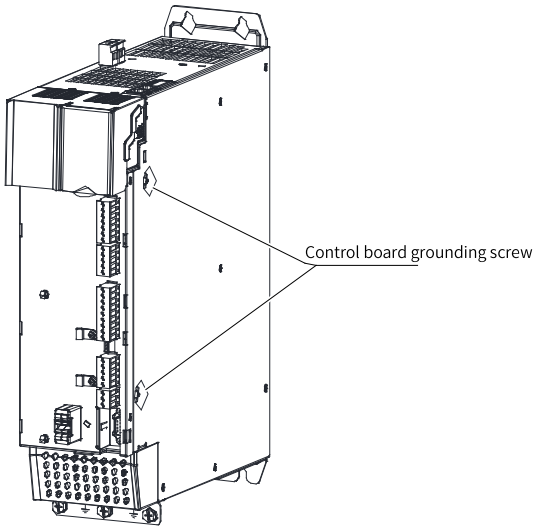

Figure 5-32 Grounding screw of the control board for the inverter unit

Single-Device Grounding

Connect the rectifier unit, inverter unit, and components such as the input reactor and filter to the PE copper bar by star connection, as shown in the following figure.

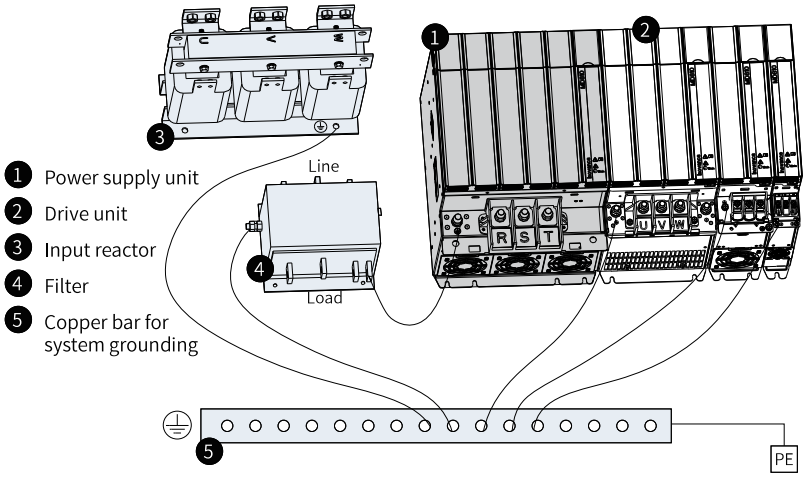

Figure 5-33 System grounding

Multi-Device Grounding

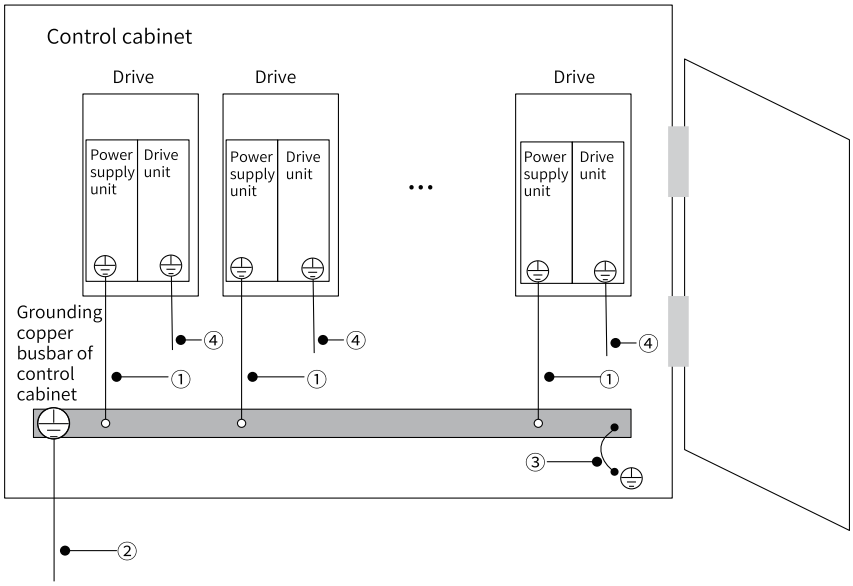

Figure 5-34 Side-by-side installation of multiple drives

Table 5–8 Grounding multiple servo drives installed side by side

No.	Wiring description
①	Connect the main circuit input PE terminal to the grounding copper busbar of the control cabinet through the protective grounding conductor.
②	Connect the PE cable on the input power supply end to the grounding copper busbar of the control cabinet.
③	Connect the grounding copper busbar of the control cabinet to the metal enclosure of the control cabinet through the protective grounding conductor.
④	Connect the motor output grounding cable to the output PE terminal of the drive.

Cabinet System Grounding

To suppress the interference of devices installed in the cabinet, isolate them that might interfere with each other. According to the interference intensity, devices must be installed in different EMC areas or cabinets. The following table describes the installation requirements.

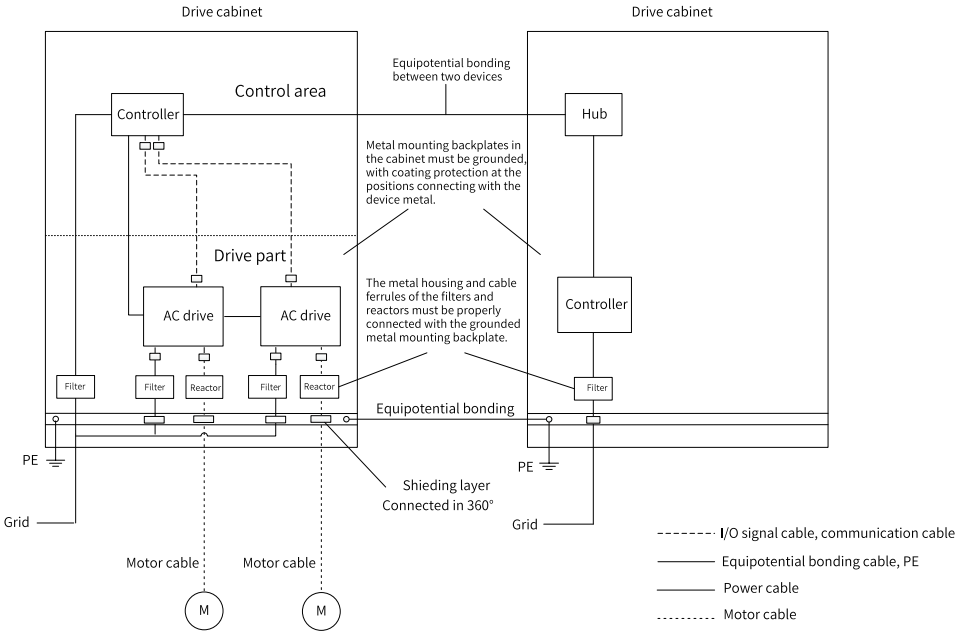

Figure 5-35 Recommended cabinet system grounding

Table 5–9 Requirements of cabinet system grounding

No.	Wiring Requirement
1	Place the control unit and the inverter unit in two separate cabinets.
2	For installation involving multiple cabinets, use the grounding cable with a cross-sectional area of at least 16 mm²to connect the cabinets. This is to ensure equipotentiality between cabinets.
3	If only one cabinet is used, place the devices in different compartments of the cabinet based on signal intensity.
4	Perform equipotential bonding for devices in different compartments of the cabinet.
5	Shield all communication (such as RS485) and signal cables drawn from the electric cabinet.
6	Place the power input filter in a position near the input interface of the cabinet.
7	Provide spray coating protection for all grounding points in the cabinet.

5.9 EtherCAT Communication Connection

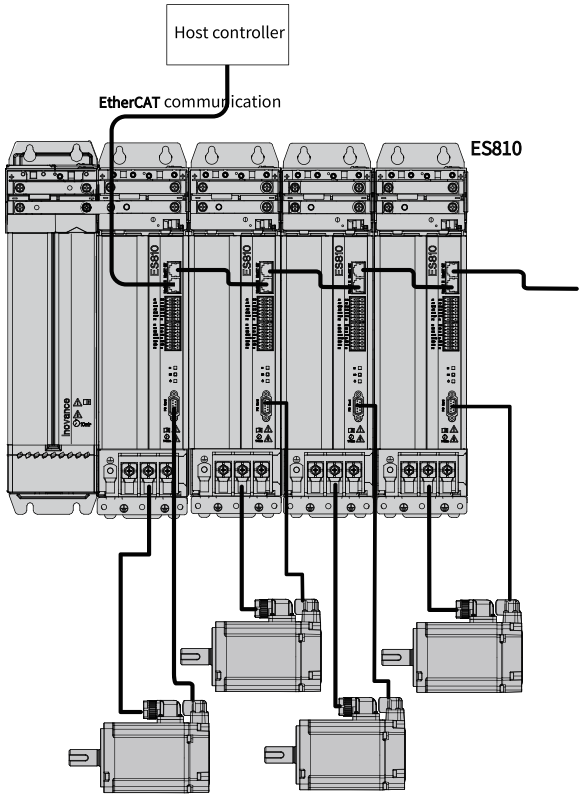

Figure 5-36 Communication topology

Table 5–10 EtherCAT signal pins

Pin No.	Symbol	Description	Terminal Pin Arrangement
1	TX+	Data transmission+	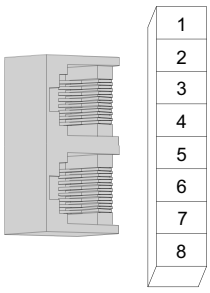
2	TX-	Data transmission-	
3	RX+	Data transmission+	
4	-	-	
5	-	-	
6	RX-	Data reception-	
7	-	-	
8	-	-	
Enclosure	PE	Shield	

5.10 Connecting the Rectifier Unit and Inverter Unit

Connecting the DC bus power supply

Remove the display cover on the inverter unit side. Connect the rectifier unit to the inverter unit with the DC busbar.

Caution

The pre-installed connector (busbar) is used for electrical connection of the device. Connection using a lead wire cannot guarantee the running stability and safety of the device.

Bonding busbar
1. Loosen the screw of the operator. Remove the cover and the operator, as shown in the following figure. 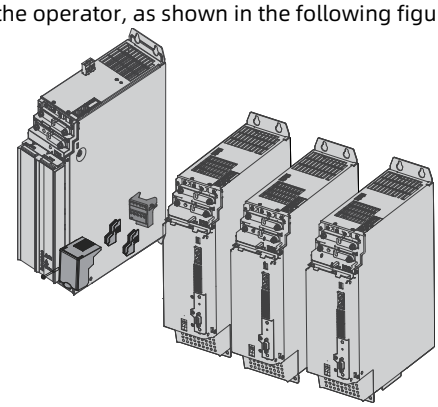 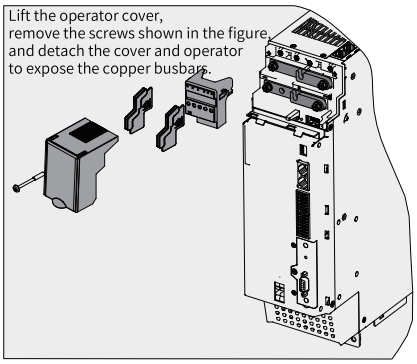
2. Loosen the screws of the DC busbar and turn over the DC link bridge. 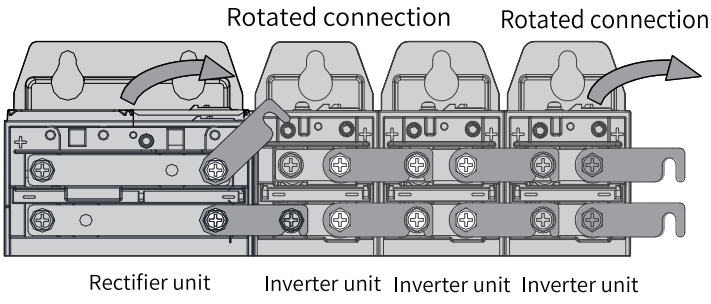
3. Tighten the screws and calibrate the torques of all screws with a recommended tightening torque of 2.6 N·m to 3.0 N·m.

Connecting the protective grounding terminal

Ground each device in the system properly. Connect components such as the drive, filter, reactor, and motor in the cabinet to the PE copper busbar in the star connection mode, as shown in the following figure.

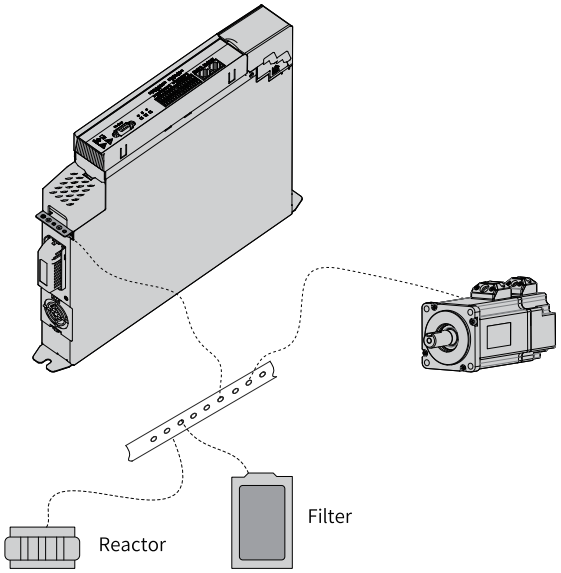

Figure 5-37 Connection of protective grounding

24 V control power supply

The power supply of the drive is divided into the control part and the power part. The control part is preferably powered through the DC busbar that is connected to the rectifier unit. It is recommended to connect the 24 V switched-mode power supply of the inverter unit to an external power supply. This ensures that the power supply of the control part of the inverter unit is not affected after stop upon faults of the rectifier unit. Note that the 24 V terminal of the drive must be correctly connected, as shown in the following figure.

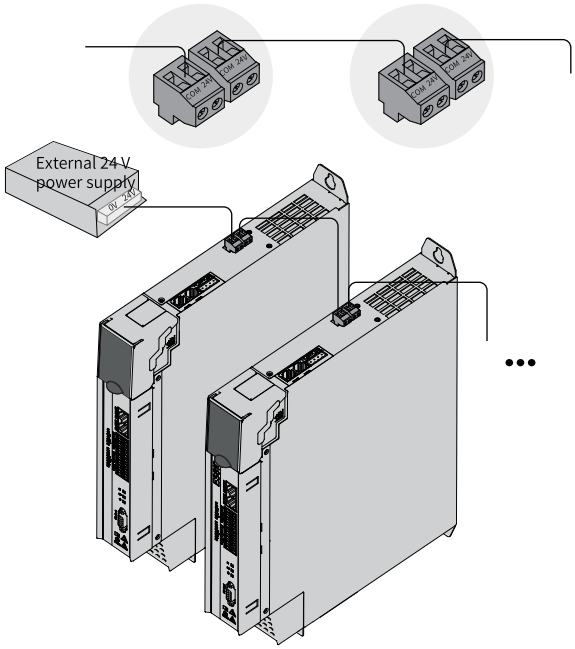

5.11 Connecting the Inverter Unit to the Motor

Wiring of the inverter unit and servo motor (with aviation connector) power cables

Connect the U, V, and W power cables of the servo motor (with the aviation connector) to the U, V, and W terminals of the inverter unit, and connect the grounding cable of the servo motor to the PE grounding terminal of the inverter unit.

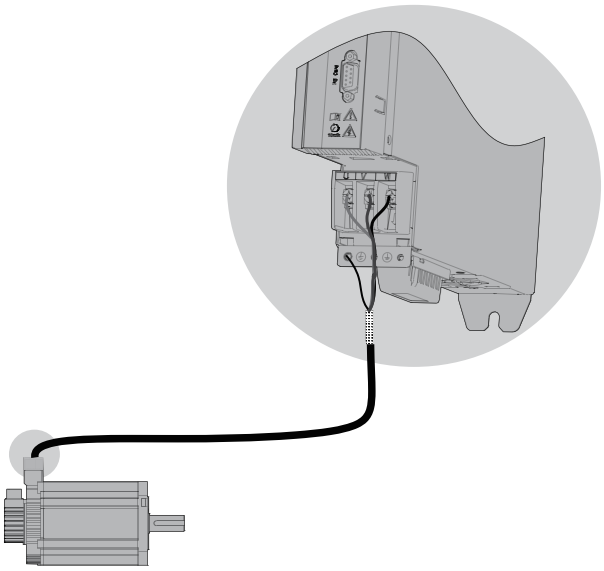

Figure 5-38 Wiring the inverter unit and the servo motor (with the aviation connector)

Connection between the inverter unit and servo motor (without aviation connector) power cables

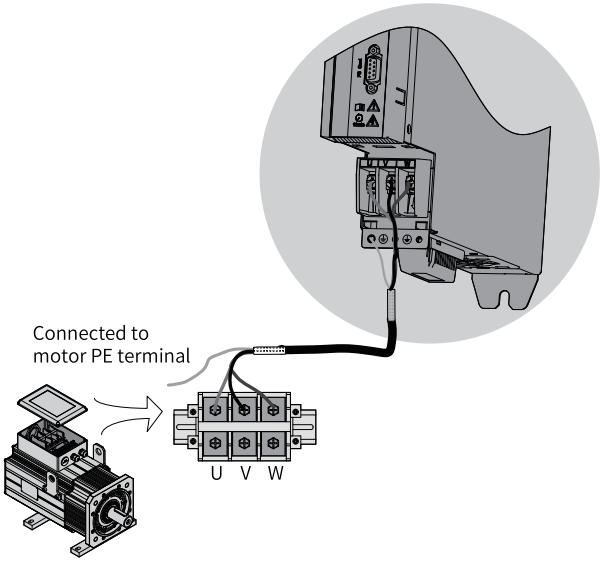

Figure 5-39 Example of connection between inverter unit output and servo motor (without aviation connector)

Connection between the inverter unit and absolute encoder

1. Installing the battery box

   Insert the T-shaped ridge at the bottom of the battery box into the sheet metal card slot. Press and hold the elastic buckles on both sides, install the battery box to the bracket, and then release the buckles.

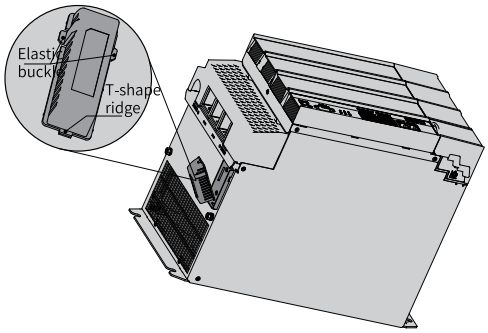

2. Wiring the battery box

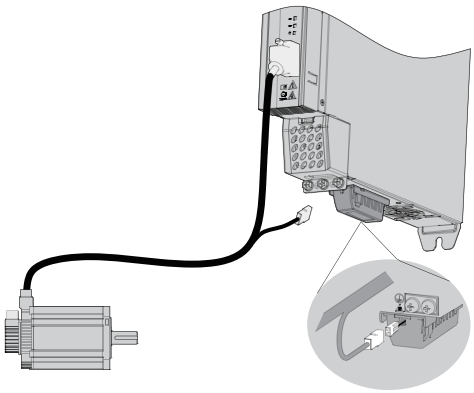

Figure 5-40 Wiring example of absolute encoder signals and the battery box

Color of battery box external leads:

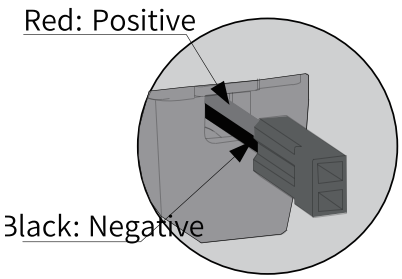

Figure 5-41 External leads of the absolute encoder battery

Note

Store the battery in required temperature and ensure reliable contact and sufficient electricity. Failure to comply may cause loss of the encoder position.

3. Removing the battery box

The battery may generate leakage liquid after long-term use. Replace it every two years. Remove the battery box based on the procedure shown in the preceding figure, but in the reverse order. When closing the battery box cover, prevent the connector cables from being pinched.

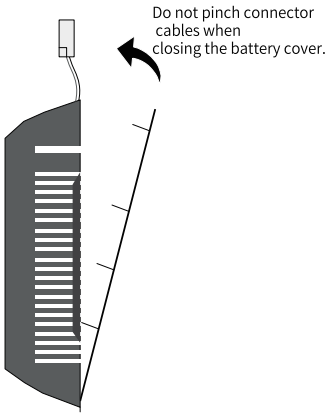

Caution

If the battery is used improperly, it may result in battery leakage which rot the components or battery explosion. Observe the following precautions during use:

- Insert the battery with polarity (+/-) placed correctly.
- Leaving an idled or retired battery inside the device may lead to electrolyte leakage. The electrolyte is highly corrosive to surrounding components and may cause short circuits due to its conductivity. Replace the battery periodically (recommended period: Every 2 years).
- NEVER decompose the battery, so as to prevent personal injury by spraying of electrolyte.
- NEVER put the battery in a fire. Failure to comply may result in an explosion.
- Do not strip off the battery tube or short-circuit the battery. Do not connect metal to the electrodes of the battery. Otherwise, a large current is produced, weakening the battery power which could result in an explosion due to severe heating.
- This battery is not rechargeable.
- Dispose the battery according to local regulations.

4. Selecting the battery model

Select an appropriate battery according to the following table.

Battery specification	Item and unit	Rated value			Condition
		Min. value	Typical value	Max. value	
Output: 3.6 V, 2500 mAh	External battery voltage (V)	3.2	3.6	5.0	In the standby mode[1]
	Circuit fault voltage (V)	-	2.6	-	In the standby mode
	Battery alarm voltage (V)	2.85	3.0	3.15	-
	Circuit-consumed current (μA)	-	2.0	-	In the normal operation mode[2]
		-	10.0	-	In the standby mode, with the axis at a standstill
		-	80.0	-	In standby mode, with the axis operating
	Ambient temperature for the battery (℃)	0.0	-	40.0	Same as the motor temperature requirements
	Storage temperature for the battery (℃)	-20.0	-	60.0	

The preceding data is measured in the ambient temperature of 20℃.

- Note [1]: In the standby mode, when the inverter unit is not switched on, the encoder counts the multi-turn data by using the external battery power supply. In this mode, the absolute encoder stops data transceiving.
- [2] In the normal operation mode, the absolute encoder counts the single-turn and multi-turn data and performs data transceiving. After the absolute encoder is correctly connected, it can receive and send data after a short delay (about 5s) when the inverter unit is powered on. When the encoder switches from standby mode to normal operation mode (power on), the motor speed cannot exceed 10 rpm. Otherwise, the inverter unit reports 740. In this case, perform a power cycle.

5. Theoretical battery life

The calculation below only involves the current consumed by the encoder and does not cover the current consumed by the battery itself.

In the following table, T1 represents the duration in which the drive works normally per day. T2 represents the duration in which the motor rotates after the drive is powered off. T3 represents the duration in which the motor stops after power-off [unit: hour (h)].

Item	Schedule 1	Schedule 2
Working days in different operating conditions within one year	313.0	52.0
T1 (h)	8.0	0.0
T2 (h)	0.1	0.0
T3 (h)	15.9	24.0

Capacity consumed within 1 year = (8h x 2μA + 0.1h x 80 μA + 15.9 h x 10 μA) x 313 + (0h x 2 μA + 0 h x 80 μA + 24 h x 10 μA) x 52 ≈ 70 mA

Theoretical battery life = Battery capacity/Battery power consumed in 1 year = 2600 mAh/70 mAh = 37.1 years

5.12 Post-Wiring Inspection

Check the following items after wiring. Sign the "Compliance" column if the check item meets the requirements.

Table 5–11 Wiring checklist

No.	Item	Compliance
1	The drive model is consistent with the model described in the order.	☐
2	The peripheral devices (braking resistor, braking unit, AC reactor, filter, and circuit breaker) meet the design requirements.	☐
3	The installation method and location of the drive meet requirements.	☐
4	The voltage on the input side of the drive is between 323 V to 528 V.	☐
5	The rated voltage of the motor is consistent with the output specifications of the drive.	☐
6	The power supply input cables are connected to R, S, and T terminals.	☐
7	The motor input cables are connected to the U, V, and W terminals.	☐
8	The cross-sectional area of the main circuit cable meets the requirements.	☐
9	The motor output cable does not exceed 50 m. Otherwise, you need to reduce the carrier frequency (F0-15).	☐
10	The grounding cable is connected properly.	☐
11	The output terminals and control signal cable terminals of the drive are connected properly.	☐
12	The braking resistor and braking unit with proper resistance are wired properly.	☐
13	Shielded twisted pair cables are used for the control circuit signal cables of the drive, and the shield is connected to the shield bracket.	☐
14	The control circuit cables and main circuit power cables are routed through different routes.	☐
15	When wiring multiple motors, ensure the wiring is correct and avoid cross-connection between the motor and the drive. Cross-connection may cause motor operation error.	☐

6 Commissioning Tool

6.1 Operating Panel

6.1.1 Component Description

You can perform operations such as parameter setting/modification, operating status monitoring and motor parameter auto-tuning on the ES810 series products via this LED operating panel. The following figure shows the appearance and operation key names of the LED operating panel.

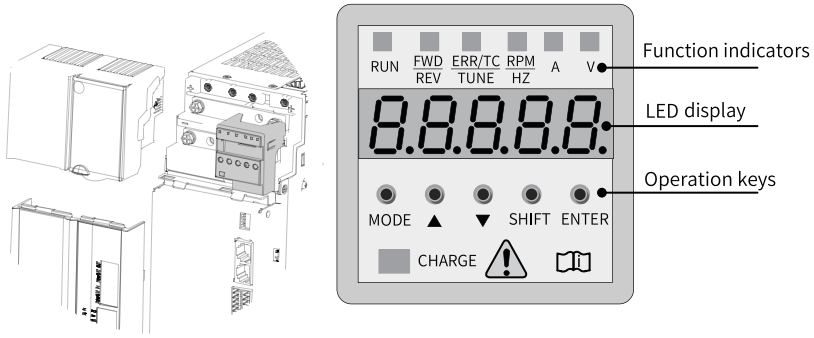

Figure 6-1 Appearance of the operating panel

Functional indicators

In the following table,  indicates ON,  indicates OFF,  indicates flashing.

Table 6–1 Description of status indicators

Indicator Status		Description
RUN Running state indicator	 RUN	OFF: Stop
	 RUN	ON: Running
FWD/REV FWD/REV indicator	 FWD/REV	OFF: Forward running
	 FWD/REV	ON: Reverse running

Indicator Status		Description
ERR/TC/TUNE Fault/Torque control/Auto-tuning indicator	 ERR/TC/TUNE	OFF: Speed control mode
	 ERR/TC/TUNE	ON (green): Torque control mode
	 ERR/TC/TUNE	Slow flashing (green): Auto-tuning state (flashing 1 time/s)
	 ERR/TC/TUNE	Quick flashing (red): Fault state (flashing 4 times/s)
 Hz A V		Speed/Frequency unit: rpm/Hz
Hz  A V		Current unit: A
Hz A  V		Voltage unit: V
Hz  A V		Parameter unit: %

LED display area

The 5-digit LEDs are able to display the set frequency and output frequency, all monitoring data, and fault codes.

Table 6–2 LED display and actual data

Display	Actual data	Display	Actual data	Display	Actual data	Display	Actual data
	0		7		D		o
	1		8		E		P
	2		9, g		F		R
	3		A		H		T
	4		B		J		U
	5, S		C		L		u
	6		c		N		

Keys

Table 6–3 Functions of the keys

Key	Name	Function
MODE	Program key	Enter or exit menus, and switch parameter query modes.
▲	Increment key	Increase the displayed data or parameter.
▼	Decrement key	Decrease the displayed data or parameter.
SHIFT	Shift key	Select the displayed parameters in turn in the stop or running state, and select the digit to be modified when modifying parameters.
ENTER	Confirm key	Enter each level of the menu interface, and confirm the displayed parameter setting.

6.1.2 Rectifier Unit

6.1.2.1 Viewing and Modifying Parameters

The LED operating panel of the ES810 series rectifier unit uses a three-level menu structure to perform operations such as parameter settings. After entering a menu at every level, press ▲ and ▼ to perform modification when a display bit flashes. The following figure shows the operation flowchart.

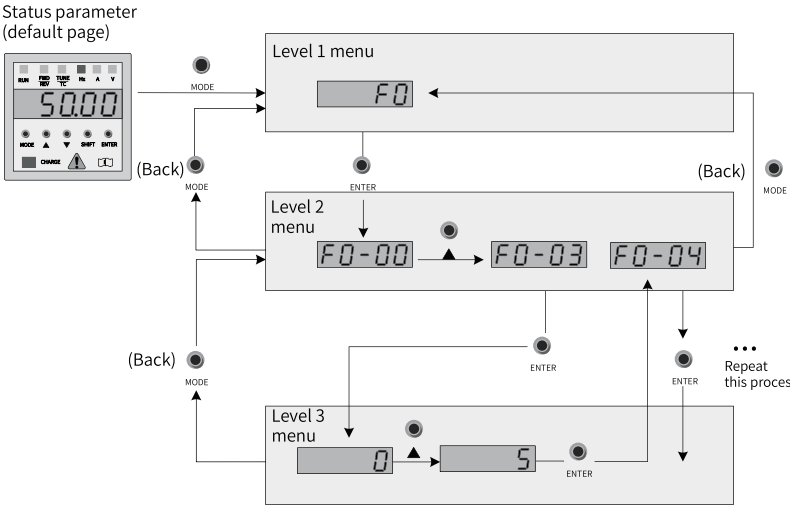

Figure 6-2 Operation flowchart for level 3 menus

Example of changing F3-02 from 10.00 Hz to 15.00 Hz.

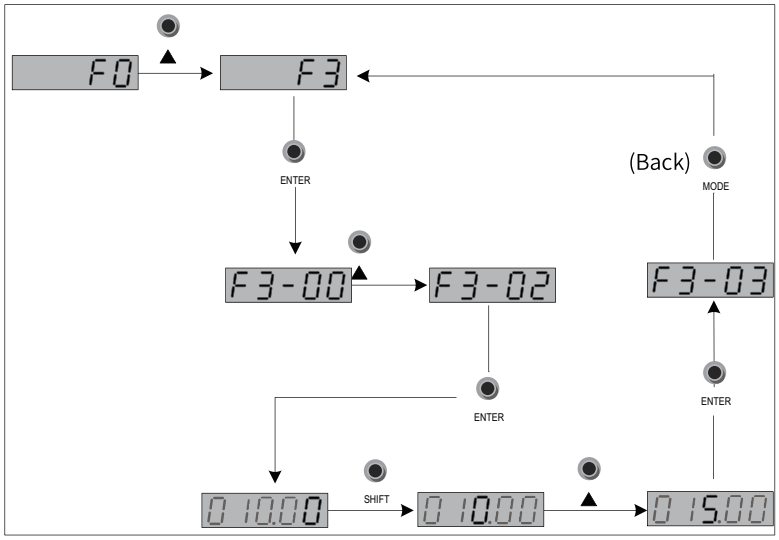

Figure 6-3 Parameter modification

You can go back to level 2 menu from level 3 menu by pressing MODE or ENTER . The difference between the two keys is as follows:

- Pressing ENTER is to save a set parameter and then go back to a level 2 menu and automatically shift to the next parameter. Pressing MODE is to abort the current parameter modification and directly go back to a level 2 menu with the current parameter No..

In the level 3 menu, if no digit of the parameter blinks, the parameter cannot be changed. The possible reasons include:

- This parameter is a non-editable parameter such as a rectifier unit type parameter, actual detection parameter, and operation log parameter.
- This parameter can be changed after stop only.

6.1.2.2 Parameter View

You can view parameters through three modes. The default is basic view mode (to view all parameter groups). The other two quick view modes are also available through setting FP-03.

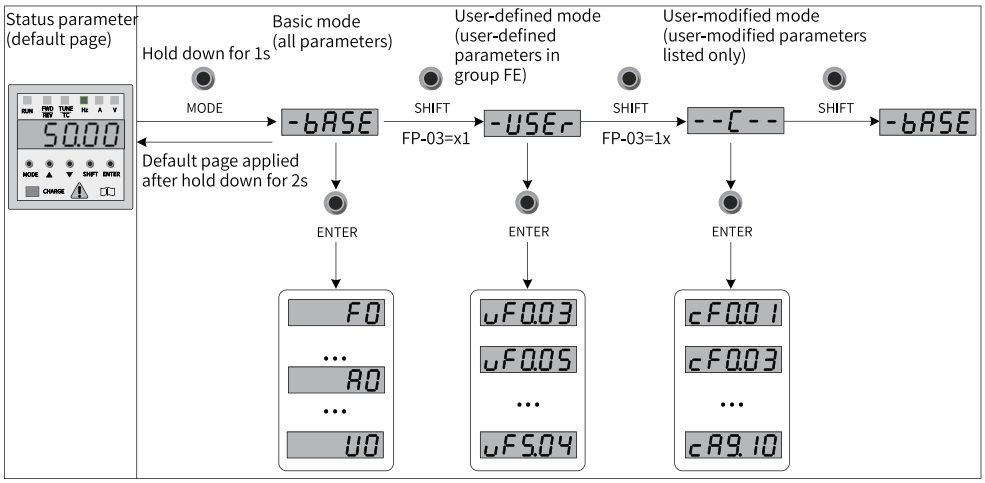

Figure 6-4 Parameter view modes

As shown in the preceding figure, the parameter display form such as uF3.02 in the custom mode menu indicates the function parameter F3-02. The operation method of modifying parameters in the customized menu is the same as that of modifying corresponding parameters in ordinary programming state. The operation panel provides three view modes: basic mode, user-defined mode and user-modified mode, as listed in the following table.

Parameter display mode	Display	Description
User-defined parameter mode	-USEr	Used to view user-defined parameters.
User-modified parameter mode	--C--	Used to view parameters with values different from defaults.
Basic mode	-bASE	Used to view all parameters.

1. **Basic view mode**

The basic parameter list includes all parameters of the drive. You can query or modify these parameters by using the method described in *"6.1.2.1 Viewing and Modifying Parameters" on page 107*. Three parameter display modes can be switched by pressing MODE on the operating panel. After entering each group of parameters, the view or modification methods are the same as operation methods in *"6.1.2.1 Viewing and Modifying Parameters" on page 107* .

2. **Quick view method**

To display parameters in the user-defined group and user-modified group, set FP-03 to 11.

Param.	Function	Default value	Value range	Description
FP-03	Function parameter group display selection	11	Ones: -USEr Group display selection 0: Not displayed; 1: Displayed Tens: --C-- Group display selection 0: Not displayed; 1: Displayed	Used to define whether to display parameters in the user-defined group and user-modified group.

- View user-defined parameter groups

  MODE Hold down to enter the "User-defined parameter" mode where you can view user-defined parameters.

  How to set user-defined parameters: You can set up to 32 commonly used parameters in group FE (FE-00 to FE-31). There are 16 user-defined parameters (FE-00 to FE-15) in group FE by default. You can modify these default parameters as needed. If a parameter in group FE is set to F0.00, it indicates that no user-defined parameter is defined.

  If " MODE " is displayed when you hold  down to enter a menu, it indicates that the user-defined menu is empty. The following table shows the default parameters in a user-defined menu:

Table 6–4 Commonly-used parameters in the user-defined menu

Param.	User-defined parameter	Name	Param.	User-defined parameter	Name
FE-00	F0-01	Control mode	FE-01	F0-02	Operation command selection
FE-02	F0-03	Main frequency reference input selection	FE-03	F0-07	Frequency source superposition selection
FE-04	F0-08	Preset frequency	FE-05	F0-17	Acceleration time
FE-06	F0-18	Deceleration time	FE-07	F3-00	V/f curve
FE-08	F3-01	Torque boost	FE-09	F4-00	DI1 function selection
FE-10	F4-01	DI2 function selection	FE-11	F4-02	DI3 function selection
FE-12	F5-04	DO1 function selection	FE-13	F5-07	AO output selection
FE-14	F6-00	Startup mode	FE-15	F6-10	Stop mode

- View user-modified parameters

  Hold MODE down to enter the "user-modified parameter" mode  where you can view parameters with values different from defaults.

  This mode allows you to access the modified parameters quickly. In the user-modified parameter group, only the parameters modified to a non-default value are displayed. These parameters are generated by the drive automatically.

3. **Status parameter view**

In stop or operation state, multiple status parameters can be displayed by pressing SHIFT on the operating panel to switch every byte of F7-03, F7-04 and F7-05.

In the operation state, 32 operation status parameters are available. F7-03 (Parameter 1 displayed during operation) and F7-04 (Parameter 2 displayed during operation) determine whether to display the corresponding parameter of each binary bit. In the stop state, 13 stop status parameters are available. F7-05 (Parameter displayed at stop) determines whether to display the corresponding parameter of each binary bit.

The following takes F7-03 as an example:

Viewing parameters in operation state via the panel: (operating frequency, bus voltage, output voltage, output current, output power and PID setting)

1. Set corresponding bit of F7-03 (Parameter 1 displayed during operation) to 1 according to the mapping relation of each byte and the preceding parameters.
2. Convert this binary value to a hexadecimal value and set this hexadecimal value to F7-03. The value displayed on the operating panel is .
3. You can view related parameter values by switching every byte of F7-03 through 

on the operating panel. The settings are shown as follows.

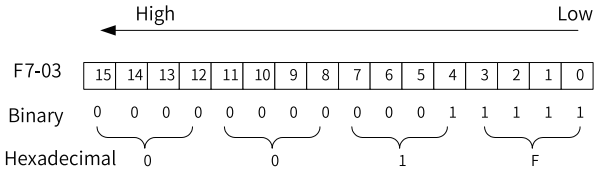

The method for viewing parameters in other status is the same as that for F7-03. The relationship between the status parameter and each byte of F7-03, F7-04, and F7-05 is as follows.

Param.	Function	Default value	Value range	Description
F7-03	Parameter 1 displayed during operation	1F	0000 to FFFF	If the following parameters need to be displayed during operation, set their corresponding bit to 1. After converting the binary number to a hexadecimal equivalent, set it in F7-03. 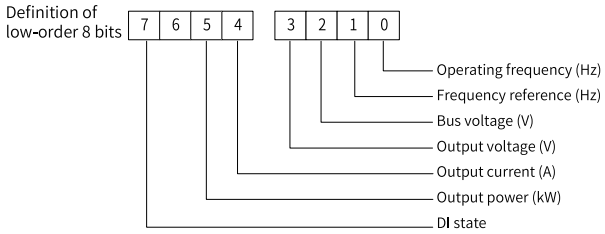 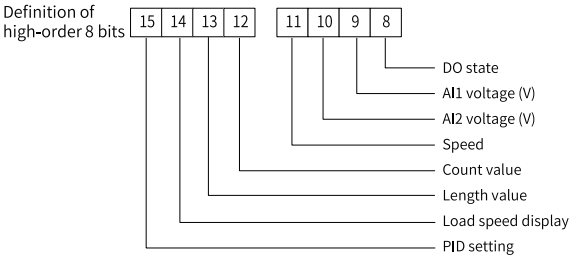 Note: The shaded part is displayed by default.
F7-04	Parameter 2 displayed during operation	0	0000 to FFFF	If the following parameters need to be displayed during operation, set their corresponding bit to 1. After converting the binary number to a hexadecimal equivalent, set it in F7-04. 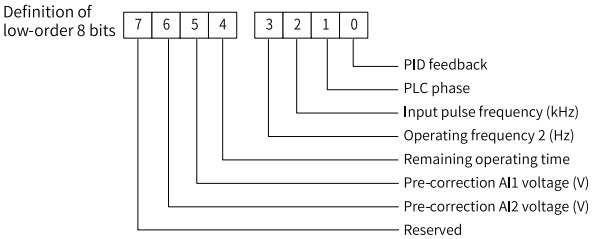 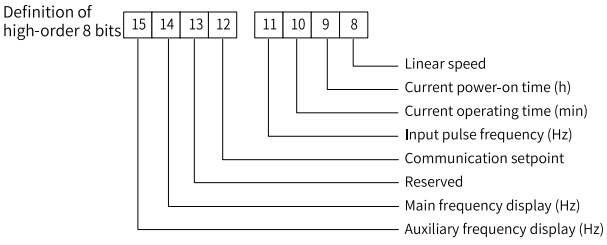

Param.	Function	Default value	Value range	Description
F7-05	Parameter displayed at stop	0	0000 to FFFF	If a parameter needs to be displayed when the drive stops, set its corresponding bit to 1. After converting the binary number to a hexadecimal equivalent, set it in F7-05. 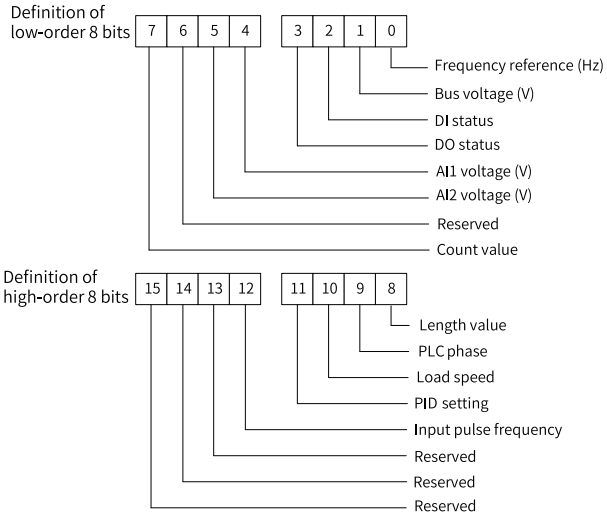 Note: The shaded part is displayed by default.

Note

The parameter selected before power failure is displayed at next power-on by default.

6.1.3 Inverter Unit

6.1.3.1 Panel Display

Transition relation between the operating panel display and the host controller operation object

The mapping relation between the parameter (decimal) displayed by the panel and the object dictionary operated by the host controller (hexadecimal, "Index" and "Sub-index") is as follows.

- Object dictionary index = 0 x 2000 + function code group No.;
- Object dictionary sub-index = Hexadecimal offset within the parameter group + 1 For example:

Panel Display	Object Dictionary Operated by the Host Controller
H00-00	2000-01h
H00-01	2000-02h
…	…
H01-09	2001-0Ah
H01-10	2001-0Bh
…	…
H02-15	2002-10h

The following parts only describe parameter display and settings on the operating panel (decimal). You need to make conversion when setting parameters (hexadecimal) on the host controller.

The panel can display the running status, parameter, faults, and monitored information during running of the servo drive.

- State display: Displays the current servo drive state, such as servo ready or running;
- Parameter display: Displays the function codes and their setting values;
- Fault display: Displays the fault and warnings occurring in the servo drive;
- Monitored value display: displays the values of monitoring parameters

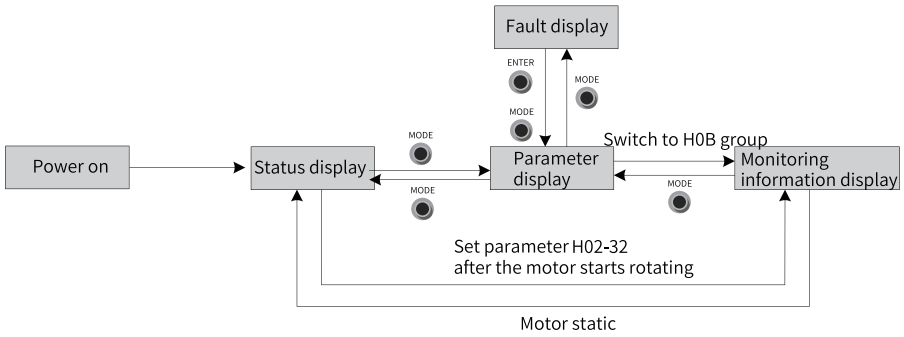

Figure 6-5 Switchover among different display modes

1. The panel enters status display immediately upon power-on.
2. Press the MODE key to switch over between different modes, as shown in the preceding figure.
3. In state display mode, set H02-32 and select the monitored parameters. When the motor rotates, the operating panel automatically switches over to monitoring display. After the motor stops, the panel automatically restores to the state display.
4. In parameter display mode, set H02-32 and select the parameters to be pre-monitored, and the operating panel switches to the monitoring display mode.
5. When a fault occurs, the operating panel immediately enters the fault display mode, and all 5-digit LEDs blink. Press the ENTER key, and the LEDs stop blinking. Press and hold the ENTER key for three seconds for a reset, and then press the MODE key to switch to the parameter display mode.

Status display

Display	Name	Scenario	Description
	reset: Servo initializing	Upon power-on	The servo drive is in the initialization or reset status. After initialization or reset is completed, the servo drive automatically switches to other status.
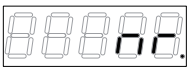	nr: Servo not ready	The servo drive is initialized, but is not ready.	The servo drive is not ready to run because the main circuit is not powered on. For details, see Chapter "Troubleshooting".
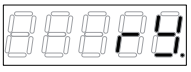	ry: Servo ready	The servo drive is ready to run.	The servo drive is ready to run and waits for the enabling signal from the host controller.
	rn: Servo running	Servo ON (S-ON) signal is activated.	The servo drive is running.
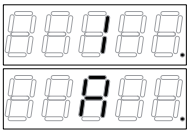	1-A: Control modes	-	Displays the present operation mode of the drive in hexadecimal digits. • 1: Profile position mode • 3: Profile velocity mode • 4: Profile torque mode • 6: Homing mode • 8: Cyclic synchronous position mode • 9: Cyclic synchronous velocity mode

Display	Name	Scenario	Description
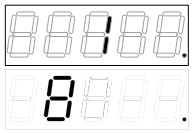	1-8: Communication status	-	Displays the status of the slave EtherCAT status machine in the form of characters. • 1: Initialization • 2: Pre-operational • 4: Safe-operational • 8: Running
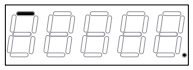	-: Communication port 1 connection indicator	PORT1	• Steady OFF: No communication connection is detected in the physical layer. • Steady ON: Communication connection is detected in the physical layer.
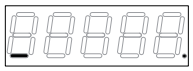	-: Communication port 0 connection indicator	PORT0	

Parameter display

The ES810 servo drive offers 17 parameter groups based on parameter functions. The parameter can be located quickly based on the group it belongs to. For details on the parameters, see "Appendix A: Parameters of Inverter Unit" section in "ES810 Series Servo Drive (Multi-drive System) User Guide".

Display of parameter groups

Display	Name	Description
HXX.YY	Function code group	XX: Function code group number YY: Offset in function code group

For example, H02-00 is displayed as follows:

Display	Name	Description
	Function code H02-00	02: Function code group number 00: Offset in function code group

Display of negative numbers and numbers with different lengths

Signed number of 4 digits and below or unsigned number of 5 digits and below

Such numbers are displayed on a single page (five digits). For signed numbers, the highest bit "-" represents the negative symbol.

For example, -9999 is displayed as follows:



For example, 65535 is displayed as follows:



Signed number with more than 4 digits and unsigned number with more than 5 digits

Such numbers are displayed from low to high bits (5 bits per page) on several pages: Present page + Value on present page, as shown in the following figure. Hold down SHIFT for more than 2s to switch to the next page.

For example, "-1073741824" is displayed as follows:

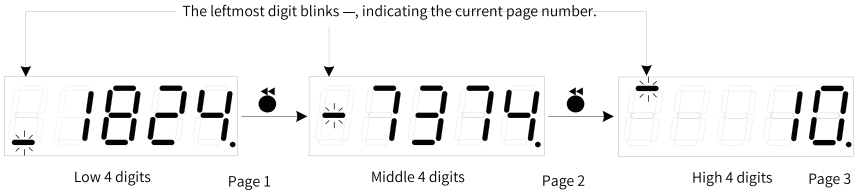

For example, 1073741824 is displayed as follows:

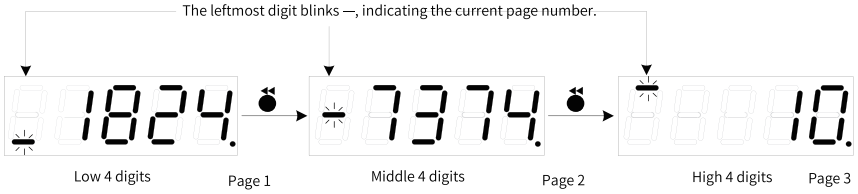

Display of the decimal point

Display	Name	Description
	Decimal point	100.0

Display of parameter setting status

Display	Name	Scenario	Description
	F.InIt (parameters restored to default)	The parameter initialization function is used (H02-31=1)	The servo drive is restoring parameters to default setting (Function Code Initialize). After initialization is completed, the control power is on again.
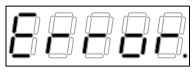	Error (wrong password)	The user password (H02.30) is activated, but the password entered is incorrect.	The servo drive prompts the password error (Error), and you need to enter the correct password.
	FAIL	The one-key auto-tuning function is enabled.	The function of auto-tuning with one key fails.

Fault display

1. The panel can be used to display present or previous fault and alarm codes. For analysis and solutions to the faults and warnings, see chapter "Troubleshooting".
2. When a fault or an alarm occurs, the operatimg panel immediately displays the corresponding fault or alarm code. When multiple faults or alarms occur, the operating panel displays the fault or alarm code of the highest fault level.
3. Set the number of history faults that can be viewed in H0B-33 and view H0B-34 to display the select fault or alarm codes.
4. Set H02-31 to 2 to clear information about the latest 10 faults or warnings stored in the servo drive.

Display	Name	Description
	Current fault code	• A: Alarm code. The servo drive is in the stop state upon the alarm. • E: Error code. The servo drive is in the stop state upon the alarm. • 941: Fault code • 0: Fault sub-code

Monitoring information display

Group H0B of the servo drive: Displays the parameters for monitoring the running status of the servo drive.

Set H02-32 (Default panel display). After the servo motor runs properly, the panel switches from servo status display mode to parameter display mode and displays the parameter No. defined by H02-32 in group H0B.

For example, if H02-32 = 00, the panel displays the value of H0B-00 if the servo motor speed is not 0.

Parameters	Name	Unit	Description	Example
H0B-00	Actual motor speed	rpm	The actual servo motor speed after round-off is displayed, in unit of 1 rpm.	Display of 3000 rpm: 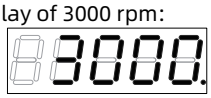 Display of -3000 rpm: 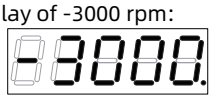

6.1.3.2 Parameter Setting

You can set parameters through the operating panel. For details on parameters, see *" Appendix A: Parameters of the Inverter Unit" on page 273*. The following figure shows how to switch from the position control mode to the speed control mode after power-on.



Figure 6-6 Example of parameter setting

- MODE: Used to switch the panel display mode and return to the previous interface.
- UP/DOWN: Used to increase or decrease the value of the blinking digit.
- SHIFT: Used to shift the blinking digit.
- ENTER: Used to save present setpoint or switch to the next interface.

After parameters are set, the parameter group interface is automatically displayed (H02-01).

6.1.3.3 Password Settings

After the user password (H02-30) is activated, only authorized operators can set parameters. Other operators can only view parameters.

Setting the user password

The following figure shows how to set the password to "00001".

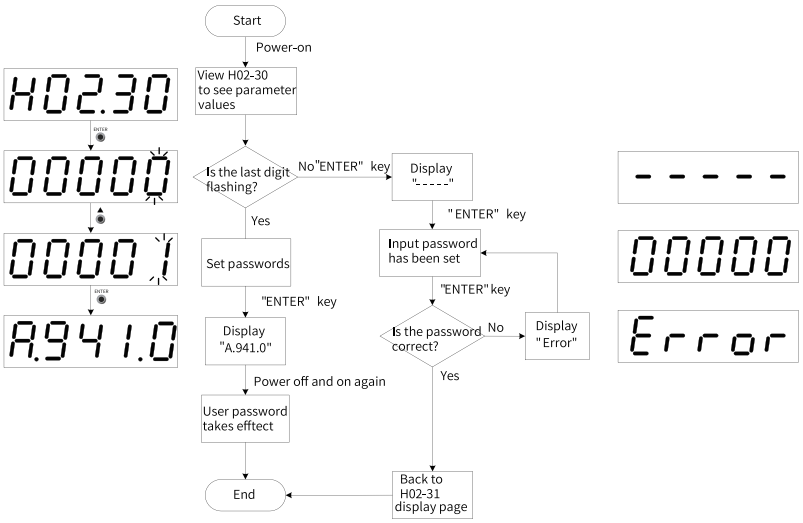

Figure 6-7 Procedure for setting the user password

Note

- If the last digit does not blink, password protection is enabled. If the last digit blinks, password is not set or the correct password has been entered.
- To change the user password, input the current password first to grant permissions on parameter setting. Enter H02-30 again, and you can set a new password, according to the method described in the preceding figure.

Canceling the user password

Enter the existing user password, and set H02-30 to "00000". Then, the user password is canceled.

6.1.3.4 JOG Trial Running

Caution

When using the jog running function, set the S-ON signal inactive. Otherwise, this function cannot be used.

Use the jog running function to perform trial running on the servo motor and drive.

Operation Method

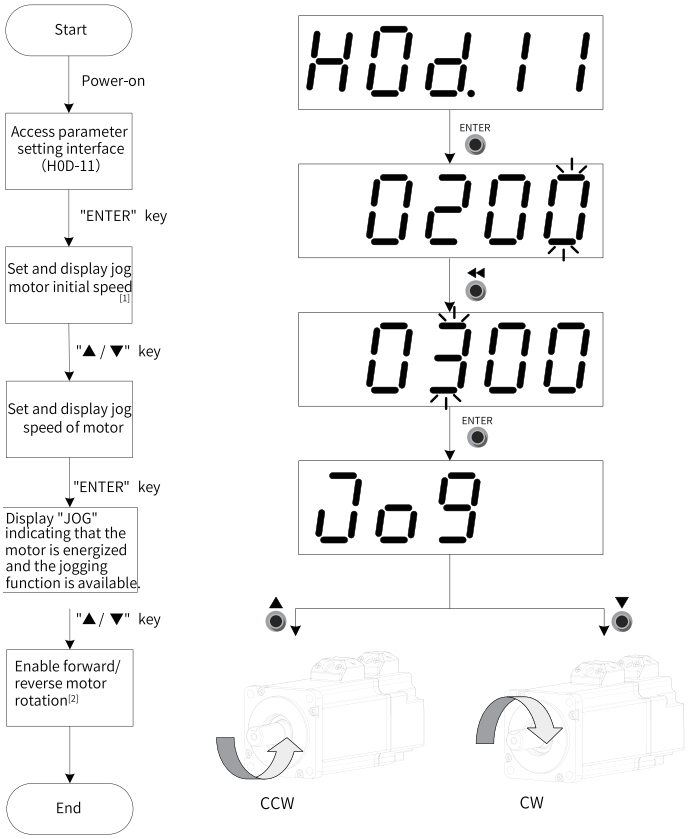

Figure 6-8 Jog setting procedure

Note

- 1: Press the UP or DOWN key to increase or decrease the motor speed for the jog running. If the servo drive exits the jog running, the motor speed restores to the initial value.
- Press the key UP or DOWN to make the servo motor rotate in the forward or reverse direction. After the key is released, the servo motor stops running immediately.

Exiting Jog Running

Press the MODE key to exit the jog running and return to the upper-level menu.

6.1.3.5 DIDO Function

6.2 InoDriveShop Software

InoDriveShop is developed for ES810 series products. The following figure shows the software icon.



InoDriveShop supports functions such as real-time monitoring, parameter configuration, oscilloscope, DP bus configuration and emergency stop.

Access to the software: Contact Inovance technical support.

6.2.1 Creating/Loading Items

After starting the InoDriveShop, select Create/Open project on the homepage.

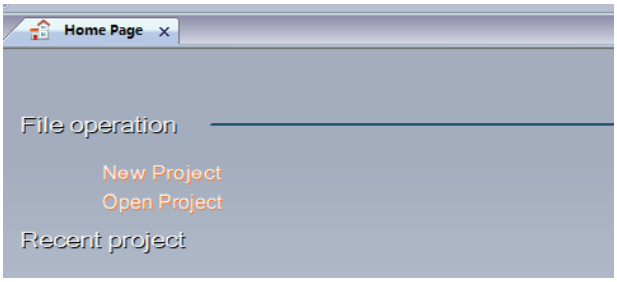

Operation description:

1. Creating a project

   Select ES810 for the device and usb for the communication type. Then check [Adaptive baud rate]. The following figure describes the USB connection.



2. Opening the project

   Open the project file type with the suffix .inoPro.

Note

If you use "Load existing item", note that the drive information recorded is consistent with the conditions on site.

6.2.2 Connecting/Disconnecting Communication

Click the [Connect] button on the toolbar to establish the connection. Click the button [Disconnect] to disconnect the connection.

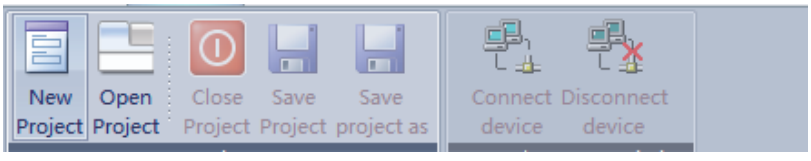

Operation description:

1. Establishing connection

Click the [Connect device] to set the communication parameters based on existing setting, as shown in the following figure. If connection fails, a message indicating [Communication configuration fails] will be displayed. In this case, select [Auto search] to enter the device search interface. After searching is done, connection will be applied automatically.

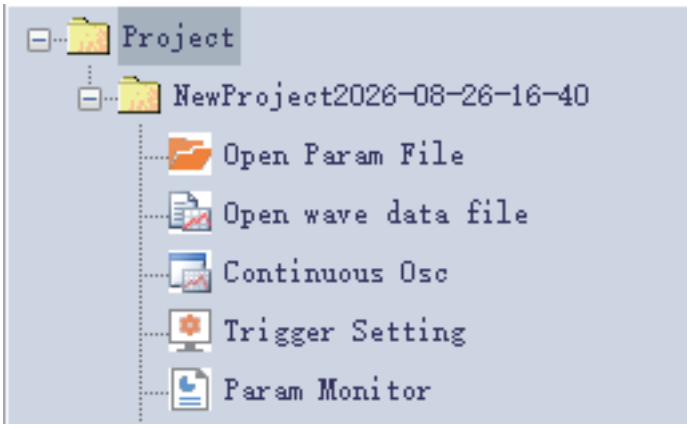

Figure 6-9 Connection succeeded

2. Disconnect

After you click [Disconnect device], connection will be interrupted automatically, as shown in the following figure.

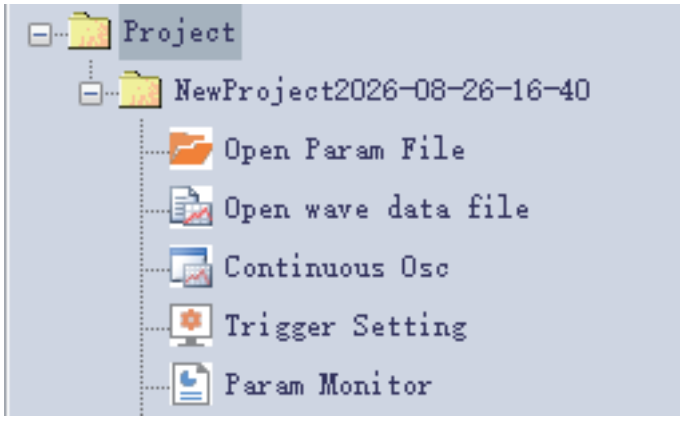

Figure 6-10 Connection failed

6.2.3 Opening Parameter File

This button is used to open the parameter file (xxx.inoparam) saved. You can view the saved parameters in the software.

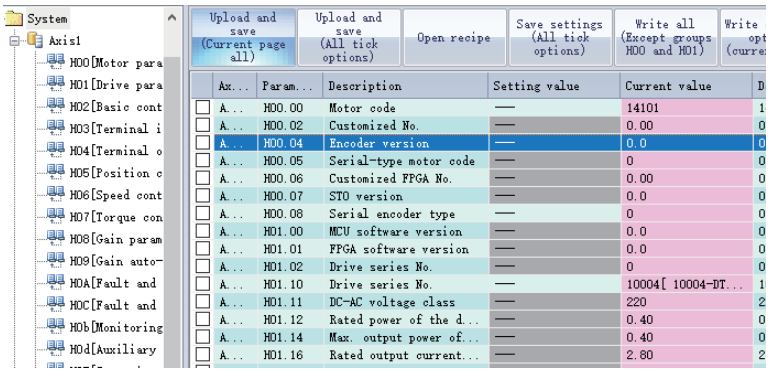

6.2.4 Continuous Oscilloscope

This button is used for continuous waveform collection. Select the channel needed in the channel selection interface.

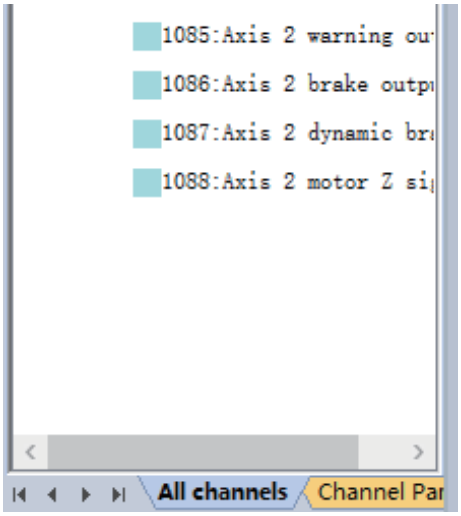

Functions of the buttons on the menu bar:

- Save files: Used to save waveform files (.inocwv).
- Auto fit: Used to adjust the scale automatically.
- Tile: Used to separate different channels.
- Cursor: Used to view the current value of the channel at different moments and the average value over a certain period of time.
- Open/Save configuration file: Used to save or open the channel configuration.

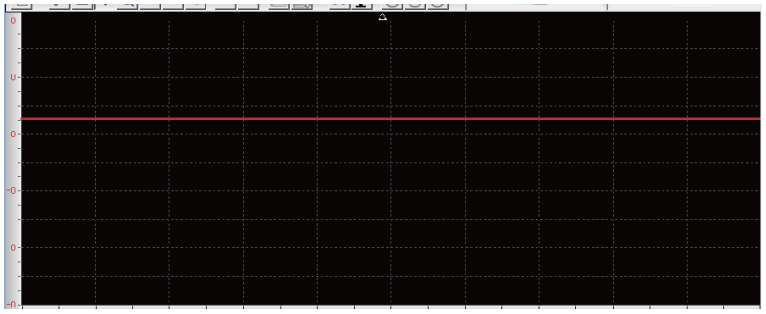

6.2.5 Waveform Analyzer

In the waveform analyzer, you can open a saved waveform or compare two waveforms.

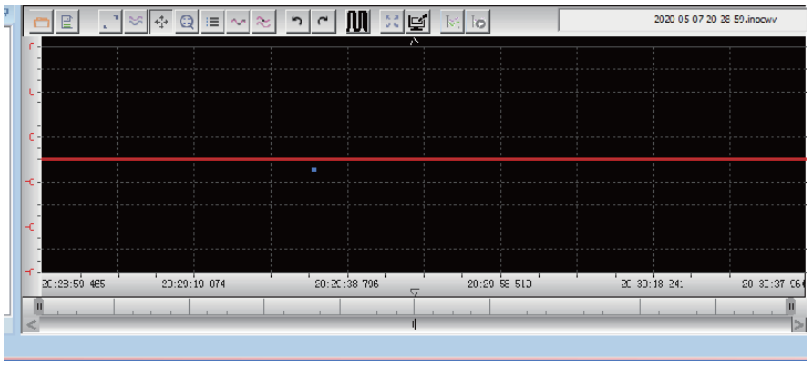

6.2.6 Trigger Setting

Waveforms of high resolution can be obtained by triggering waveform sampling. Select the channel needed in [Channel settings] and set the trigger condition needed. When all the settings are done, click [Trigger sampling] to generate waveforms.

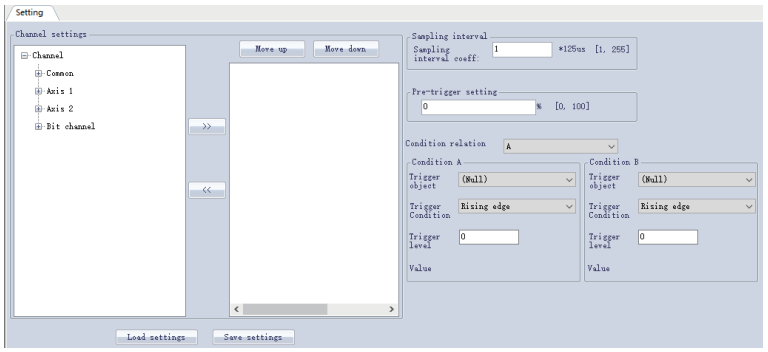

6.2.7 Parameter Monitoring

You can add the parameter to the monitoring table, and view the parameters in the parameter monitoring interface after adding them.



6.2.8 Parameter List

The drive parameters can be viewed in the parameter list, and you can use the compare function to compare the two saved parameter files. To download parameters to the drive, make necessary modification at the setpoints and click the download button.

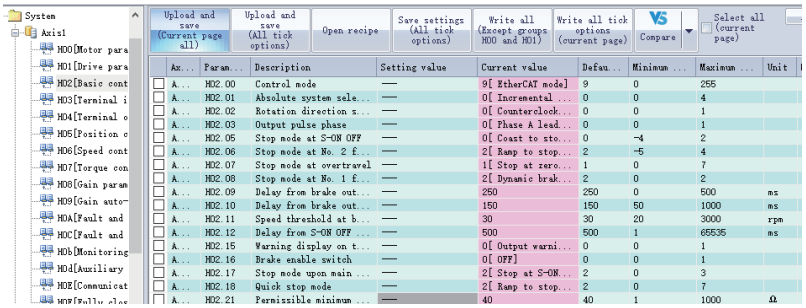
System
Axis1
H00[Motor para
H01[Drive para
H02[Basic cont
H03[Terminal i
H04[Terminal o
H05[Position c
H06[Speed cont
H07[Torque con
H08[Gain param
H09[Gain auto-
H0A[Fault and
H0C[Fault and
H0b[Monitoring
H0d[Auxiliary
H0E[Communicat
Upload and save (Current page all)
Upload and save (All tick options)
Open recipe
Save settings (All tick options)
Write all (Except groups H00 and H01)
Write all tick options (current page)
Compare
Select all (current page)
Ax... Param... Description Setting value Current value Defau... Minimum ... Maximum ... Unit
A... H02.00 Control mode — 9[EtherCAT mode] 9 0 255
A... H02.01 Absolute system sele... — 0[Incremental ... 0 0 4
A... H02.02 Rotation direction s... — 0[Counterclock... 0 0 1
A... H02.03 Output pulse phase — 0[Phase A lead... 0 0 1
A... H02.05 Stop mode at S-ON OFF — 0[Coast to sto... 0 -4 2
A... H02.06 Stop mode at No. 2 f... — 2[Ramp to stop... 2 -5 4
A... H02.07 Stop mode at overtravel — 1[Stop at zero... 1 0 7
A... H02.08 Stop mode at No. 1 f... — 2[Dynamic brak... 2 0 2
A... H02.09 Delay from brake out... — 250 250 0 500 ms
A... H02.10 Delay from brake out... — 150 150 50 1000 ms
A... H02.11 Speed threshold at b... — 30 30 20 3000 rpm
A... H02.12 Delay from S-ON OFF ... — 500 500 1 65535 ms
A... H02.15 Warning display on t... — 0[Output warni... 0 0 1
A... H02.16 Brake enable switch — 0[OFF] 0 0 1
A... H02.17 Stop mode upon main ... — 2[Stop at S-ON... 2 0 3
A... H02.18 Quick stop mode — 2[Ramp to stop... 2 0 7
A... H02.21 Permissible minimum ... — 40 40 1 1000 Ω

7 Commissioning and Operation

7.1 Basic Setting

7.1.1 Drive Setting Flowchart

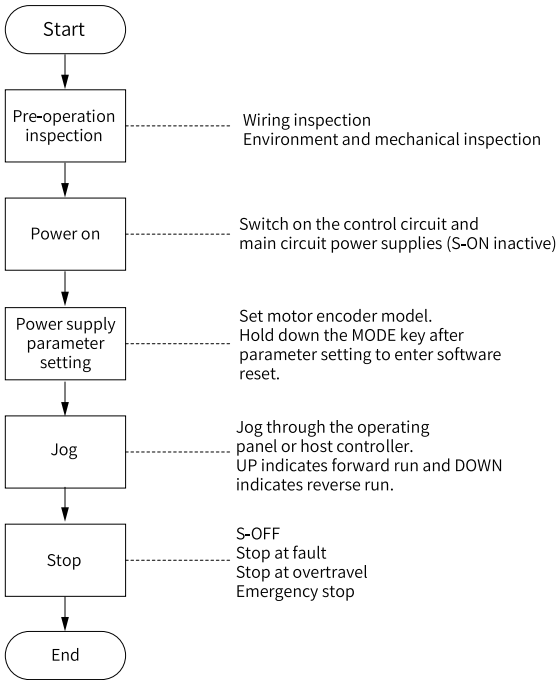

7.1.2 Pre-operation Inspection

Check the following items before operating the servo drive and the servo motor.

No.	Item	Tick
Wiring		
1	The servo drive input terminals + and - are connected to the power supply, and the input power supply is 537 VDC to 679 VDC.	□
2	The U/V/W cables are connected in the correct phase sequence on both ends.	□
3	The control signal cables, such as the brake signal cables and overtravel protection signal cables, are connected properly.	□
4	The servo drive and servo motor are grounded properly.	□
5	The cable tension is within the allowable range.	□
6	The wiring terminals are insulated properly.	□
Environment and mechanical conditions		
1	No unwanted objects (such as cable terminals and metal chippings) that may cause short circuit are present inside or outside the drive.	□
2	The drive and the external braking resistor are placed on incombustible objects.	□
3	The servo motor is properly installed. The motor shaft is securely connected to the machine.	□
4	The servo motor and the machine that connected to the motor are in good condition and ready to run.	□

Note

To determine whether the phase sequence of the servo drive output terminals U, V, and W are the same as that of the servo motor terminals U, V, and W, power on the main circuit and perform auto-tuning on the encoder initial angle (H0D-03=1).

- If the encoder initial angle is correct, the phase sequence is correct.
- If a fault occurs, the phase sequence is incorrect. Change the cable connection to correct the phase sequence.

7.1.3 Power-on

1. Switch on the main circuit power supply.
2. After you connect the power supply of the main circuit, if the bus voltage indicator is in normal display and the operating panel displays "Reset"→"Nrd"→"RDY" in sequence, it indicates that the drive is ready to run and waiting for the S-ON signal from the host controller.

7.1.4 Setting the Optical Encoder

1. Set H00-00 to 14101 (Optical encoder).
2. After setting, hold the MODE key down for 3s to apply automatic reset.

7.1.5 Jog

Perform jog to check whether the motor can rotate properly without abnormal vibration or noise.
You can enable jog through the operating panel speed mode.

Note

The acceleration and deceleration time constants can be set through H06-05 (2006-06h) and H06-06 (2006-07h) during jogging.

Jog through the operating panel speed mode

Switch to H0D-11 on the operating panel to enter the speed jog mode, and the operating panel displays the default jog speed value.
Press UP/DOWN key to set the jog speed, and press ENTER key to enter the jog state.
The operating panel displays "JOG". Then, press UP/DOWN key to perform forward or reverse jog.
Press MODE to exit from the jog mode.

7.1.6 Direction of Rotation

Set H02-02 (2002-03h) to change the motor rotation direction without changing the polarity of the input reference.

Related parameters

Name	Description	Name	Description
Access	RW	Mapping	-
Setting condition & Effective time	At stop & Next power-on	Related modes	All
Data structure	-	Data range	0 to 1
Data type	Uint16	Default	0

Defines the forward direction of the motor when viewed from the motor shaft side.

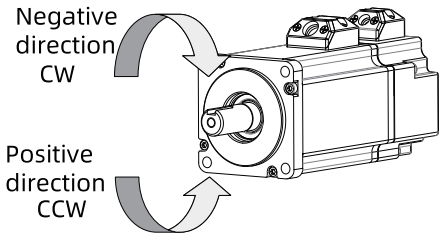

Setpoint	Direction of rotation	Remarks
0	CCW direction as forward direction	When a forward command is input, the motor rotates in CCW direction when viewed from the motor shaft side, that is, the motor rotates counterclockwise.
1	CW direction as forward direction	When a forward command is input, the motor rotates in CW direction when viewed from the motor shaft side, that is, the motor rotates clockwise.

Rotation direction change by setting H02-02 (2002-03h) does not affect the output pulse form and positive/negative attribute of monitored parameters of the drive. The forward direction of the overtravel prevention function is the same as that defined by H02-02 (2002-03h).

7.1.7 Operation Enable

Switch on the S-ON signal.

When the drive is ready to run, the operating panel displays "rn". As there is no reference input, the motor does not rotate. If the control mode of the drive is not set in 6060h or the torque and speed limits of the drive are 0, the motor is in de-energized state, or in locked state otherwise.

After a reference is input, the motor starts rotating.

Table 7–1 Operation of the drive

No.	Description	Compliance
1	During initial operation, set a proper command to make the motor run at a low speed and check whether the motor rotates properly.	□
2	Observe whether the direction of rotation is correct. If the direction of rotation is opposite to the expected direction, check the input command signal and the direction setting signal.	□
3	If the motor rotates in the correct direction, view the actual speed in 200B-01h and the average load rate in 200B-0Dh through the operating panel or the software tool.	□

No.	Description	Compliance
4	After checking the preceding conditions, adjust related parameters to make the motor operate as desired.	□
5	Commissioning of the product	□

Power-on sequence diagram

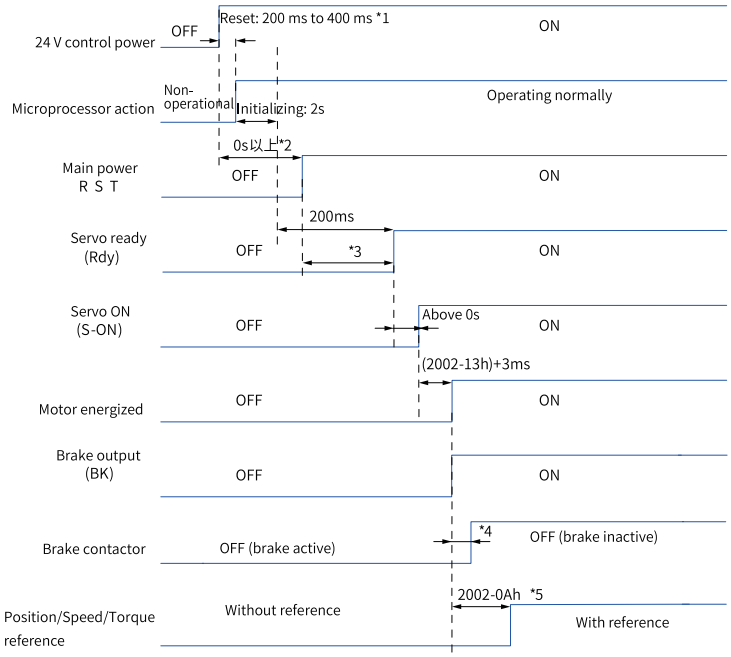

Figure 7-1 Power-on sequence diagram

Note

- *1: The reset time is determined by the +5V power setup time of the microprocessor.
- *2: Values above 0s mean that the time is determined by the actual moment the main power supply is switched on.
- *3: When the control power supply and main power supply are powered on simultaneously, this time equals the duration from microprocessor initialization completion to Rdy signal assertion.
- *4: For delay of brake contactor actions, see related motor specifications.
- *5: When DO function 9 (FunOUT.9:BK) is not assigned, 2002-0Ah is inactive.

Sequence diagram for stop at alarm or fault

- No. 1 fault: Coast to stop, keeping de-energized status

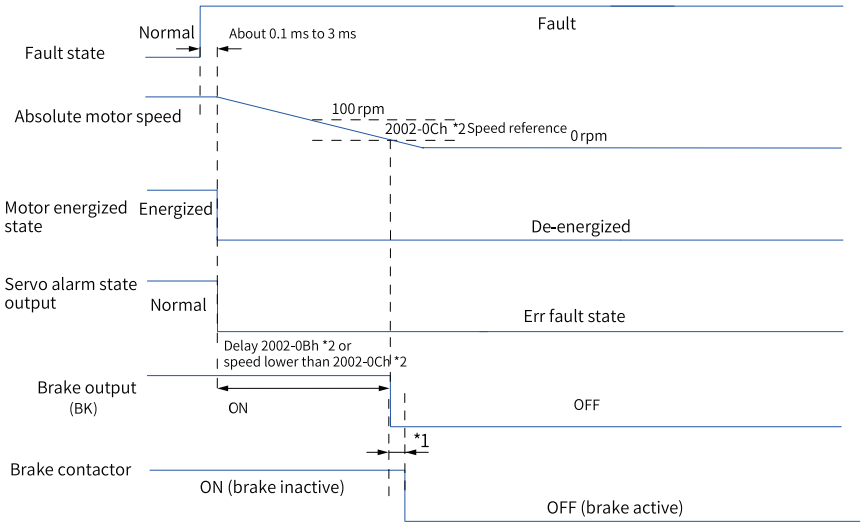

Figure 7-2 Sequence of "Coast to stop, keeping de-energized state" at No. 1 fault

Note

- *1: For details about the delay of brake contactor actions, see the motor specifications.
- *2: When DO function 9 (FunOUT.9:BK) is not assigned, 2002-0Ch and 2002-0Dh are inactive.

- No. 2 fault (without brake): Coast to stop, keeping de-energized status

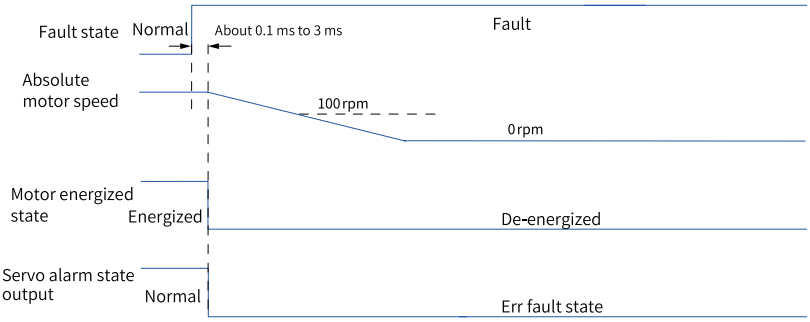

Figure 7-3 Sequence of "Coast to stop, keeping de-energized state" at No.2 fault

- No. 2 fault (without brake): Stop at zero speed, keeping de-energized state

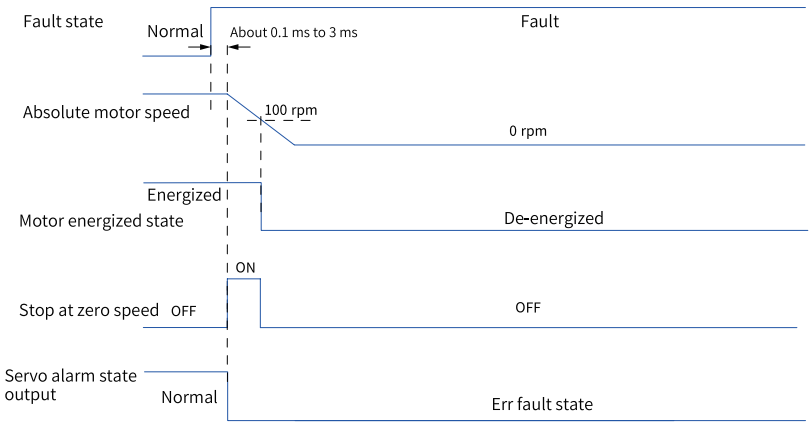

Figure 7-4 Sequence of "Stop at zero speed, keeping de-energized state" at No. 2 fault (without brake)

- No. 2 fault (with brake): Stop at zero speed, keeping de-energized state

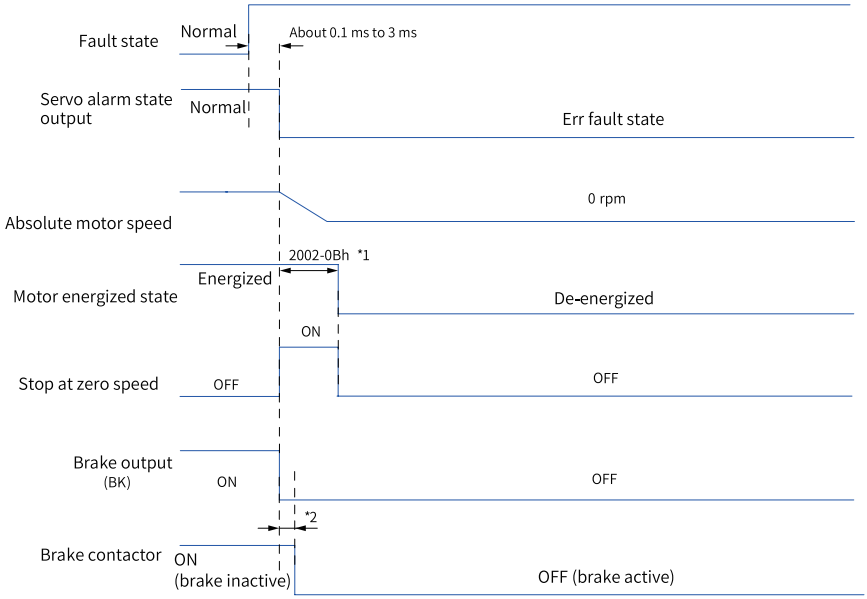

Figure 7-5 Sequence of "Stop at zero speed, keeping de-energized state" at No. 2 fault (with brake)

Note

- *1: When DO function 9 (FunOUT.9:BK) is not assigned, 2002-0Bh is inactive.
- *2: For the delay of brake contactor actions, see the related motor specifications.

- Alarms that cause stop: Stop at zero speed, keeping position lock status
  When a No. 3 alarm occurs on the drive, such as Er.900 (DI emergency braking), Er.950 (Positive limit switch alarm), and Er.952 (Negative limit switch alarm), the current operation can be interrupted and the drive stops in the following sequence.

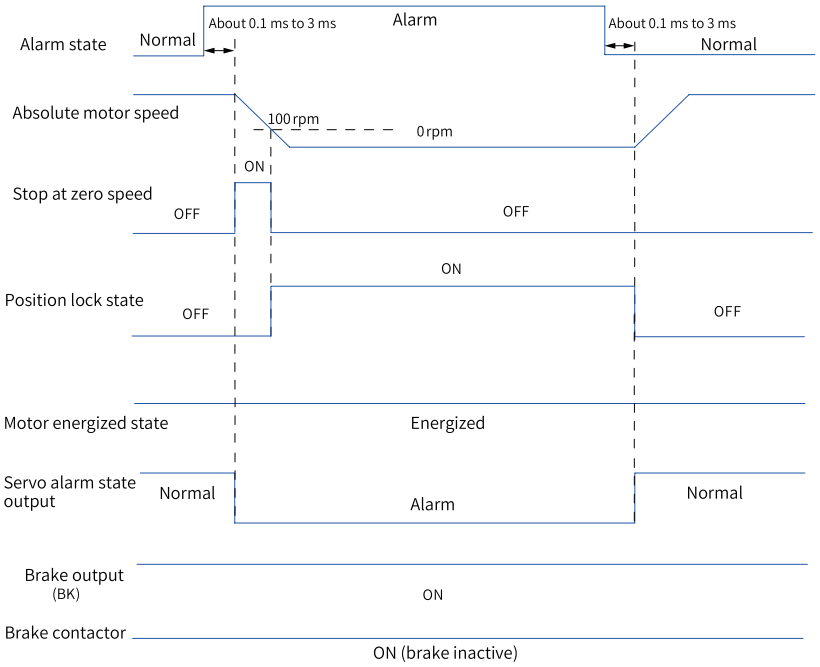

Figure 7-6 Sequence for alarms that cause stop

- Alarms that do not cause stop
  The other alarms do not affect the operation state of the drive. The sequence diagram for these alarms is shown in the following figure.

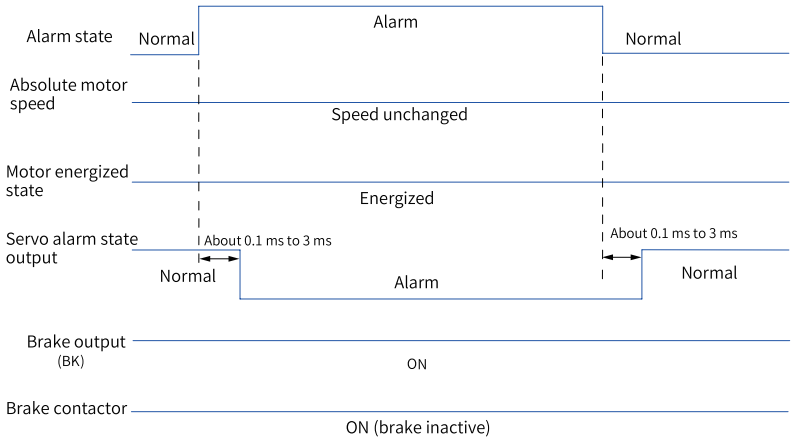

Figure 7-7 Sequence for alarms that do not cause stop

- Fault reset

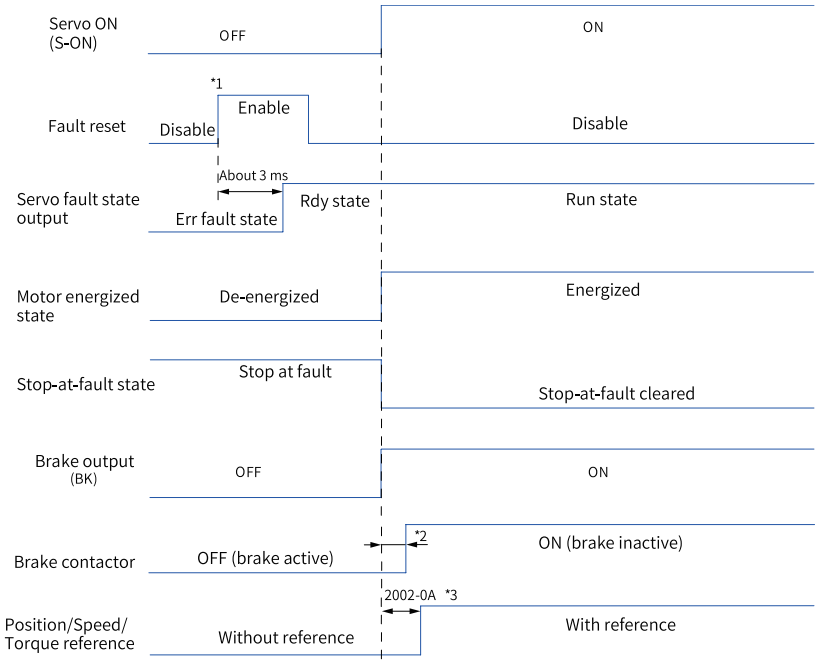

Figure 7-8 Sequence for fault reset

Note

- *1: The DI fault reset signal (FunIN.2: ALM-RST) is active at edge change.
- *2: For the delay of brake contactor actions, see the related motor specifications.
- *3: When DO function 9 (FunOUT.9:BK) is not assigned, 2002-0Ah is inactive.

7.1.8 Stop Modes

Five types of stop modes are available for the drive: coast to stop, stop at zero speed, ramp to stop, stop at emergency-stop torque, and dynamic braking stop, along with two kinds of stop status: de-energized and position lock. See the following table for details.

Table 7–2 Comparison among different stop modes

Stop mode	Description	Characteristics
Coast to stop	The motor is de-energized and coasts to stop. The deceleration time is affected by the mechanical inertia and mechanical friction.	This mode features smooth and slow deceleration with small mechanical shocks.
Stop at zero speed	The drives stop with zero speed as the target.	This mode features quick deceleration with obvious mechanical shock.
Ramp to stop	The drive decelerates smoothly to 0 rpm based on the speed reference and stops.	This mode features smooth and controllable deceleration with small mechanical shock.
Stop at emergency-stop torque	The drive outputs the reverse braking torque to stop the motor.	This mode features quick deceleration with obvious mechanical shock.

Stop mode	Description	Characteristics
Dynamic braking stop	The motor stops due to external or internal dynamic braking.	This mode features quick deceleration with obvious mechanical shock.
Speed+Torque ramp to stop	The drive decelerates smoothly to the switchover speed based on the speed reference and then stop based on the torque ramp.	This mode features smooth and controllable deceleration with small mechanical shock.

Table 7–3 Comparison of the stop states

De-energized	Position lock
The motor is de-energized, but the motor shaft can be rotated freely after the motor stops rotating.	The motor shaft is locked and cannot be rotated freely after the motor stops rotating.

The drive stops due to the following causes.

Stop at S-ON OFF

The S-ON signal is deactivated via communication, and the drive stops accordingly.

Table 7–4 2002-06h: Stop mode selection upon S-ON OFF

Name	Description	Name	Description
Access	RW	Mapping	No
Setting condition & Effective time	Real time & At stop	Related modes	All
Data structure	-	Data range	0 to 4
Data type	Uint16	Default	0

Defines the deceleration mode of the motor from rotation to stop and the motor status after stop when the S-ON signal is switched off.

Setpoint	Stop mode
0	Coast to stop, keeping de-energized status
1	Stop at zero speed, keeping de-energized status
2	Speed+Torque ramp to stop, keeping de-energized status
3	Dynamic braking stop, keeping dynamic braking status
4	Speed+Torque ramp to stop, keeping dynamic braking status

Set a proper stop mode according to the mechanical condition and operating requirements. After the brake output is enabled, the stop mode at S-ON OFF is set to "Stop at zero speed, keeping de-energized status" forcibly.

Stop at fault

The stop mode varies with the fault type.

Table 7–5 H02-08: Stop mode upon No. 1 fault

Name	Description	Name	Description
Access	R	Mapping	RPDO
Setting condition & Effective time	Display	Related modes	All

Name	Description	Name	Description
Data structure	-	Data range	0 to 10
Data type	Uint16	Default	0

Defines the deceleration mode of the motor for stopping rotation upon a No. 1 fault and the motor status after stop.

Setpoint	Stop mode
0	Coast to stop, keeping de-energized status
1	External dynamic braking stop, keeping de-energized status
2	External dynamic braking stop, keeping dynamic braking status
3	Internal dynamic braking stop, keeping de-energized status
4	Internal dynamic braking stop, keeping dynamic braking status
5	Stop at zero speed, keeping de-energized status
6	Stop at zero speed, keeping dynamic braking status
7	Ramp to stop, keeping de-energized status
8	Ramp to stop, keeping dynamic braking status
9	Speed+Torque ramp to stop, keeping de-energized status
A	Speed+Torque ramp to stop, keeping dynamic braking status

After the brake output function is enabled, the stop mode upon No. 1 fault is forcibly set to "Dynamic braking stop, keeping de-energized status". When dynamic braking is used, ensure that the motor power is less than or equal to the power of the drive. Otherwise, a hardware overcurrent fault can be reported and the motor coasts to stop.

Table 7–6 H02-06: Stop mode selection upon No.2 fault

Name	Description	Name	Description
Access	R	Mapping	No
Setting condition & Effective time	Display	Related modes	All
Data structure	VAR	Data range	0 to 10
Data type	Int16	Default	2

Fault type:

Setpoint	Stop mode
0	Coast to stop, keeping de-energized status
1	External dynamic braking stop, keeping de-energized status
2	External dynamic braking stop, keeping dynamic braking status
3	Internal dynamic braking stop, keeping de-energized status
4	Internal dynamic braking stop, keeping dynamic braking status
5	Stop at zero speed, keeping de-energized status
6	Stop at zero speed, keeping dynamic braking status
7	Ramp to stop, keeping de-energized status
8	Ramp to stop, keeping dynamic braking status
9	Speed+Torque ramp to stop, keeping de-energized status
A	Speed+Torque ramp to stop, keeping dynamic braking status

After the brake output function is enabled, the stop mode upon No. 2 fault is forcibly set to "Stop at zero speed, keeping de-energized status". When dynamic braking is used, ensure that the motor

power is less than or equal to the power of the drive. Otherwise, a hardware overcurrent fault can be reported and the motor coasts to stop.

Stop at overtravel

Overtravel: The mechanical motion exceeds the designed range of safe movement.

Stop at overtravel: When a motion part moves beyond the range of safe movement, the limit switch outputs a level change signal, and the drive stops the motor forcibly.

Table 7–7 H02-07: Stop mode selection upon overtravel

Name	Description	Name	Description
Access	RW	Mapping	-
Setting condition & Effective time	At stop & Real time	Related modes	All
Data structure	-	Data range	0 to 2
Data type	Uint16	Default	1

Defines the deceleration mode of the motor for stopping rotation upon overtravel and the motor status after stop.

Setpoint	Stop mode
0	Coast to stop, keeping de-energized status
1	Stop at zero speed, keeping position lock status
2	Stop at zero speed, keeping de-energized status

When the motor drives a vertical axis, set 2002-08h to 1 to make the motor axis in position locking state after the limit switch signal is active to ensure safety. After the brake output function is enabled, the stop mode upon overtravel is forcibly set to "Stop at zero speed, keeping position lock state".

Note

When overtravel occurs on a motor that is used to drive a vertical axis, the workpiece may fall. To prevent the workpiece from falling, set 2002-08h (Stop mode at overtravel) to 1 (Stop at zero speed, keeping position lock status). When the workpiece moves linearly, install the limit switch to prevent mechanical damage. When overtravel occurs, input a reverse run command to make the motor (workpiece) run in the opposite direction.

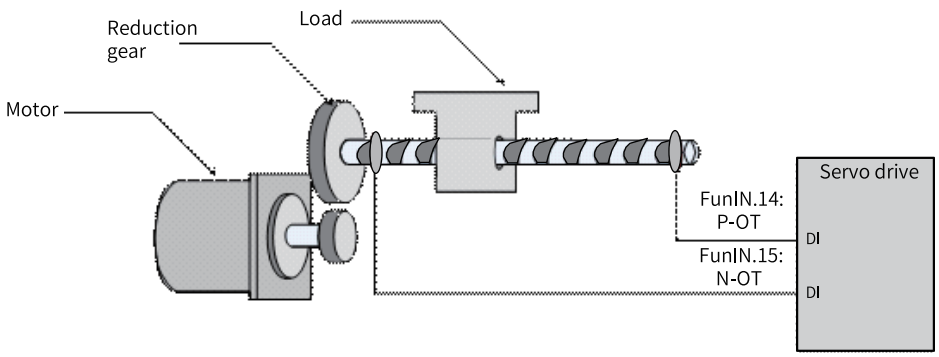

Figure 7-9 Installation of the limit switch

To use the limit switch function, assign two DI terminals of the drive with function 14 (FunIN.14: P-OT, positive limit switch) and function 15 (FunIN.15: N-OT, negative limit switch) respectively to receive the limit switch input level signals, and set the active logics of DI terminals. The device determines whether to enable or disable the limit switch function based on the DI level state.

No.	Name	Function	Description
FunIN.14	P-OT	Positive limit switch	When the mechanical motion exceeds the specified range, overtravel prevention applies. • Inactive: Forward drive permitted • Active: Forward drive inhibited
FunIN.15	N-OT	Negative limit switch	When the mechanical motion exceeds the specified range, overtravel prevention applies. • Inactive: Reverse drive permitted • Active: Reverse drive inhibited

Quick stop

When bit2 of the control word 6040h (Quick stop) is set to 0 during operation of the drive, the drive executes quick stop as defined by 605Ah.

Table 7–8 605Ah: Quick stop option code

Name	Description	Name	Description
Access	RW	Mapping	No
Setting condition & Effective time	Real time & At stop	Related modes	All
Data structure	VAR	Data range	0 to 7
Data type	Int16	Default	2

Defines the deceleration mode of the motor for stopping rotation upon quick stop and the motor status after stop.

Setpoint	Stop mode
0	Coast to stop, keeping de-energized status
1	Ramp to stop as defined by 6084h/609Ah (HM), keeping de-energized status
2	Ramp to stop as defined by 6085h, keeping de-energized state
3	Stop at emergency-stop torque, keeping de-energized status
4	N/A
5	Ramp to stop as defined by 6084h/609Ah (HM), keeping position lock status
6	Ramp to stop as defined by 6085h, keeping position lock status
7	Stop at emergency-stop torque, keeping position lock status

Halt

The halt function applies when bit8 of the control word 6040h is set to 1 (Active). The halt mode is defined by 605Dh.

Table 7–9 605Dh - Pause stop mode selection

Name	Description	Name	Description
Access	RW	Mapping	No
Setting condition & Effective time	Real time & At stop	Related modes	All

Name	Description	Name	Description
Data structure	VAR	Data range	1 to 3
Data type	Int16	Default	1

Defines the deceleration mode of the motor for stopping rotation upon halt and the motor status after stop.

Table 7–10 CSP/CST/CST/PP/HM

Setpoint	Stop mode
1	Ramp to stop as defined by 6084h/609Ah (HM), keeping position lock status
2	Ramp to stop as defined by 6085h, keeping position lock status
3	Stop at emergency-stop torque, keeping position lock status

Table 7–11 Profile torque mode

Setpoint	Stop mode
1/2/3	Ramp to stop as defined by 6087h, keeping position lock status

Setting of stop modes upon fault

The stop mode of the drive is enabled by default. The drive stops upon fault according to the mode set by parameters in group H0E. Two different stop modes are available. For the system without external braking, set H0E-45 to 1. For the system with external braking, set H0E-45 to 2.

7.1.9 Conversion Factor Setting

Note

- For a 20-bit encoder, the default gear ratio 6091-01h/6091-02h is 1:1.
- For a 23-bit encoder, the default gear ratio 6091-01h/6091-02h is 8:1.

6091h: Gear ratio The gear ratio indicates the motor displacement (in encoder unit) corresponding to the load shaft displacement of 1 reference unit.

The gear ratio is defined by the numerator 6091-01h and denominator 6091-02h. It determines the relationship between the load shaft displacement (in reference unit) and the motor displacement (in encoder unit):

Motor displacement = Load shaft displacement x Gear ratio

The motor is connected to the load through the reducer and other mechanical transmission mechanism. The gear ratio is related to the mechanical reduction ratio, mechanical dimensions, and motor resolution. The position factor is calculated as follows.

$$\text{Gear ratio} = \frac{\text{Motor resolution}}{\text{Load shaft resolution}}$$

Table 7–12 Index 6091h: Gear ratio

Name	Description	Name	Description
Access	-	Mapping	Yes
Setting condition & Effective time	-	Related modes	All
Data structure	ARR	Data range	OD data range
Data type	Uint32	Default	OD default value

The gear ratio is used to establish the relationship between the number of motor shaft revolutions and the number of load shaft revolutions.

Electronic gear ratio range: (0.001 x Encoder resolution/10000, 4000 x Encoder resolution/10000). If this range is exceeded, E.B03.3 (Gear ratio limit violation) can occur.

The motor position feedback (encoder unit) and load shaft position feedback (reference unit) is in the following relationship:

$$\text{Motor position feedback} = \text{Load shaft position feedback} \times \text{Gear ratio}$$

The motor speed (rpm) and the load shaft speed (reference unit/s) is in the following relationship.

$$\text{Motor speed (rpm)} = \frac{\text{Load shaft speed x Gear ratio 6091h}}{\text{Encoder resolution}} \times 60$$

The relationship between the motor acceleration (rpm/ms) and the load shaft acceleration (reference unit/s^2) is as follows.

$$\text{Motor acceleration} = \frac{\text{Load shaft acceleration x Gear ratio 6091h}}{\text{Encoder resolution}} \times \frac{1000}{60}$$

Table 7–13 Sub-index 0h: Number of sub-indexes of the gear ratio

Name	Description	Name	Description
Access	RO	Mapping	No
Setting condition & Effective time	-	Related modes	-
Data structure	-	Data range	-
Data type	Uint8	Default	2

Table 7–14 Sub-index 1h: Motor resolution

Name	Description	Name	Description
Access	RW	Mapping	RPDO
Setting condition & Effective time	During running & Real time	Related modes	-
Data structure	-	Data range	1 to (2^{32} - 1)
Data type	Uint32	Default	Set according to the encoder resolution.

Table 7–15 Sub-index 2h: Shaft resolution

Name	Description	Name	Description
Access	RW	Mapping	RPDO
Setting condition & Effective time	During running & Real time	Related modes	-

Name	Description	Name	Description
Data structure	-	Data range	1 to (2^{32} - 1)
Data type	Uint32	Default	1

For a 20-bit encoder, the default gear ratio 6091-01h/6091-02h is 1:1.

For a 23-bit encoder, the default gear ratio 6091-01h/6091-02h is 8:1.

The gear ratio must be within the range of 0.001 x Encoder resolution/10000 to 4000 x Encoder resolution/10000. Otherwise, E.B03.3 (Gear ratio setting limit violation) can occur.

Note

Take the load ball screw as an example:

Minimum reference unit (fc) = 1 mm; screw lead (pB) = 10 mm/r; reduction ratio (n) = 5:1; Inovance 20-bit bus encoder motor resolution (P) = 1048576 p/r

Therefore, the position factor is calculated as follows:

$$\text{Position factor} = \frac{\text{Motor resolution P x n}}{\text{PB}}$$

$$= \frac{1048576 \times 5}{10}$$

$$= \frac{5242880}{10}$$

$$= 524288$$

6091-1h = 524288, 6091-2h = 1 That means when the load shaft displacement is 1 mm, the motor displacement is 524288.

Divide the values of 6091-1h and 6091-2h until there is no common divisor, and take the final value.

7.2 Servo Status Setting

7.2.1 State Description

To enable the ES810 to run in the specified status, observe the process stipulated in the CiA 402.

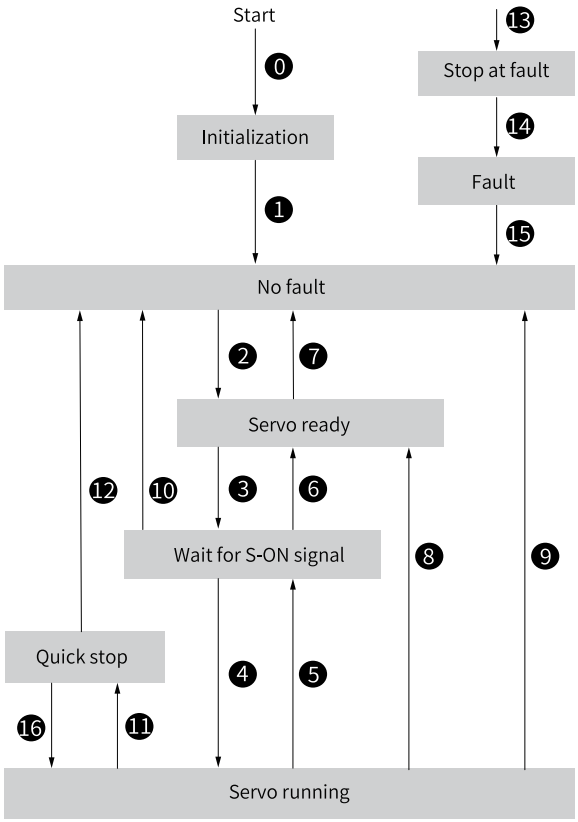

Figure 7-10 State switchover of the CiA 402 state machine

See the following table for descriptions of different states.

Initialization	• Product initialization and internal self-test have been completed. • Parameters cannot be set, and the driving function cannot be executed.
No fault	• The drive is free from faults or errors or the errors have been rectified. • The drive parameters can be set.
Ready to switch on	• The drive is ready to be switched on. • The drive parameters can be set.
Wait for the S-ON signal	• The drive is waiting for the S-ON signal. • The drive parameters can be set.
Operation enabled	• The drive is running properly and a certain operation mode is enabled. The motor is energized and starts rotating when the speed reference is not 0. • Only parameters that can be modified during running can be set.
Quick stop	• Quick stop is activated, and the drive is executing quick stop. • Only parameters that can be modified during running can be set.
Stop at fault	• A fault occurs, and the drive is in the process of stop. • Only parameters that can be modified during running can be set.
Fault	The stop process is done, and all the drive functions are inhibited. Parameter setting is allowed to rectify faults.

The following table describes the control commands and state switchover.

CiA402 state switchover		Control word 6040h	bit0 to bit9[*1] of status word 6041h
0	Power-on→Initialization	Automatic transition, control command not required	0x0000
1	Initialization→No fault	Automatic transition, control command not required; If an error occurs during initialization, the drive enters S13 directly.	0x0250
2	No fault → Ready to switch on	0x0006	0x0231
3	Ready to switch on→Wait for the S-ON signal	0x0007	0x0233
4	Wait for the S-ON signal→Servo running	0x000F	0x0237
5	Servo running→Wait for the S-ON signal	0x0007	0x0233
6	Wait for the S-ON signal→Ready to switch on	0x0006	0x0231
7	Ready to switch on→No fault	0x0000	0x0250
8	Servo running→Ready to switch on	0x0006	0x0231
9	Servo running→No fault	0x0000	0x0250
10	Wait for the S-ON signal→No fault	0x0000	0x0250
11	Servo running→Quick stop	0x0002	0x0217
12	Quick stop→No fault	Quick stop mode 605A can be set to 0 to 3. After stop, the state changes automatically with the need for a control command.	0x0250
13	→ Stop upon fault	If a fault occurs in any status other than "fault", the drive automatically switches to the stop-at-fault state, without the need for a control command.	0x021F
14	Stop upon fault→Fault	After stop, the state changes automatically without the need for a control command.	0x0218
15	Fault→No fault	0x80 • bit7 is rising edge-triggered. • bit7 remains at 1, and other control commands are inactive.	0x0250
16	Quick stop→Servo running	Set 605A to a value among 5 to 7. 0x0F is sent after stop.	0x0237

Note

As bit10 to bit15 (bit14 reserved) of status word 6041h are related to the operation status of the drive, the bit values are set to 0 in the preceding table. For details on the bit values, see the drive operation mode.

7.2.2 Control Word 6040h

Table 7–16 Index 6040h: Control word

Name	Description	Name	Description
Access	RW	Mapping	RPDO
Setting condition & Effective time	During running & At stop	Related modes	All
Data structure	VAR	Data range	0 to 65535
Data type	Uint16	Default	0

Set the control command.

bit	Name	Description
0	Switch on	1: Active; 0: Inactive
1	Enable voltage	1: Active; 0: Inactive
2	Quick stop	0: Active; 1: Inactive
3	Enable operation	1: Active; 0: Inactive
4 to 6	Operation mode specific	Related to the drive operation mode
7	Fault reset	For resettable faults and alarms, bit7 of the fault reset function is active on rising edge. When bit7 is set to 1, all other control commands are inactive.
8	Halt	For the pause method in each operation mode, see 605Dh.
9	Operation mode specific	Related to the drive operation mode
10	Reserved	Not assigned
11 to 15	Manufacturer-specific	Manufacturer-specific

Caution

- The bits in the control word together specify a certain control command, and are useless if set separately.
- The meaning of bit0 to bit3 and bit7 is the same in each operation mode of the drive. The drive switches to the preset state according to the CiA402 state machine only when the control words are sent in sequence. Each command indicates a state.
- bit4 to bit6 are related to each operation mode (see control commands in different modes for details).
- bit9 is not defined.

7.2.3 Status Word 6041h

Table 7–17 Index 6041h: Control word

Name	Description	Name	Description
Access	RO	Mapping	TPDO
Setting condition & Effective time	-	Related modes	All
Data structure	VAR	Data range	0 to xFFFF
Data type	Uint16	Default	0

Indicates the drive status.

bit	Name	Description
0	Ready to switch on	1: Active; 0: Inactive
1	Switch on	1: Active; 0: Inactive
2	Operation enabled	1: Active; 0: Inactive

bit	Name	Description
3	Fault	1: Active; 0: Inactive
4	Voltage enabled	1: Active; 0: Inactive
5	Quick stop	0: Active; 1: Inactive
6	Switch on disabled	1: Active; 0: Inactive
7	Warning	1: Active; 0: Inactive
8	Manufacturer-specific	Undefined
9	Remote	1: Active, control word active; 0: Inactive
10	Target reach	1: Active; 0: Inactive
11	Internal limit active	1: Active; 0: Inactive
12 to 13	Operation mode specific	Related to the drive operation mode
14	Manufacturer-specific	Undefined
15	Home find	1: Active; 0: Inactive

Value (Binary)	Description
xxxx xxxx x0xx 0000	Not ready to switch on
xxxx xxxx x1xx 0000	Switch on disabled
xxxx xxxx x01x 0001	Ready to switch on
xxxx xxxx x01x 0011	Switched on
xxxx xxxx x01x 0111	Operation enabled
xxxx xxxx x00x 0111	Quick stop active
xxxx xxxx x0xx 1111	Fault reaction active
xxxx xxxx x0xx 1000	Fault

Caution

- The meaning of bit0 to bit9 is the same in each operation mode of the drive. After commands in 6040h are sent in sequence, the drive feeds back a certain state.
- bit12 to bit13 are related to each operation mode (see control commands in different modes for details).
- The meaning of bit10, bit11, and bit15 is the same in each operation mode. These three bits indicate the servo status after a certain servo mode is executed.

7.3 Servo Mode Setting

7.3.1 Introduction to Operation Modes

Table 7–18 Index 6502h: Supported drive modes

Name	Description	Name	Description
Access	RO	Mapping	No
Setting condition & Effective time	-	Related modes	-
Data structure	VAR	Data range	-
Data type	UDINT32	Default	3A1h

Indicates the operation modes supported by the drive.

bit	Description	Supported or not: 0 - Not supported; 1 - Supported
0	N/A	1
1	N/A	0
2	N/A	1
3	N/A	1
4	N/A	0
5	Homing mode (HM)	1
6	Interpolation position (IP)	0
7	Cyclic synchronous position mode (CSP)	1
8	Cyclic synchronous velocity mode (CSV)	1
10 to 31	Manufacturer-specific	Reserved and undefined

If the device supports object dictionary 6502h, the supported drive modes can be viewed through 6502h.

The pre-operational mode of the drive can be set in 6060h. The current operation mode of the drive can be viewed in 6061h.

Table 7–19 Index 6060h: Modes of operation

Name	Description	Name	Description
Access	RW	Mapping	RPDO
Setting condition & Effective time	During running & At stop	Related modes	All
Data structure	VAR	Data range	0 to 10
Data type	Int8	Default	0

Defines the operation mode of the drive.

Setpoint	Operation mode	
0	N/A	Reserved
1	N/A	Reserved
2	N/A	Reserved
3	N/A	Reserved
4	N/A	Reserved
5	N/A	Reserved
6	Homing mode (HM)	See *"7.5.1 Control Block Diagram" on page 148*
7	Interpolation position (IP)	Not supported
9	Cyclic synchronous velocity mode (CSV)	See *"7.4.1 Control Block Diagram" on page 146*

If a mode not supported is set via SDO, an SDO error will be returned. For details, see *"9.3.4 SDO Transfer Abort Codes" on page 212*. If a mode not supported is set via PDO, any change to the drive mode is inactive. For details on mode switchover, see *"7.3.2 Mode Switchover" on page 145*.

Table 7–20 Index 6061h: Modes of operation display

Name	Description	Name	Description
Access	RO	Mapping	TPDO
Setting condition & Effective time	-	Related modes	All

Name	Description	Name	Description
Data structure	VAR	Data range	0 to 10
Data type	Int8	Default	0

Setpoint	Operation modes	
0	N/A	Reserved
1	N/A	Reserved
2	N/A	Reserved
3	N/A	Reserved
4	N/A	Reserved
5	N/A	Reserved
6	Homing mode (HM)	See *"7.5.1 Control Block Diagram" on page 148*
7	Interpolation position (IP)	Not supported
9	Cyclic synchronous velocity mode (CSV)	See *"7.4.1 Control Block Diagram" on page 146*

7.3.2 Mode Switchover

Caution

Precautions for mode switchover

- In any operating state, unexecuted position references are aborted upon mode switchover from profile position mode or cyclic synchronous position mode to other modes.
- In any operating state, switchover from profile velocity mode, profile torque mode or cyclic synchronous velocity mode to other modes triggers a ramp-to-stop operation. Other modes can be entered after stop.
- When the servo is in the homing mode, switchover to other modes is prohibited. Other modes may be switched to upon completion or interruption of homing (due to fault or inactive enable signal).
- When switching from other modes to cyclic synchronous mode during operation of the drive, wait for at least 1 ms before sending commands. Otherwise, command loss or errors may occur.

7.3.3 Communication Cycles Supported By Each Operation Mode

Cycle time	Profile position mode (PP)	Homing mode (HM)	Cyclic synchronous position (CSP) mode	Cyclic synchronous velocity mode (CSV)	Profile velocity mode (PV)	Profile torque mode (PT)
125 μs	X	X	X	X	X	Y
250 μs	X	X	X	X	X	Y
500 μs	X	X	X	Y	Y	Y
1 ms	Y	Y	Y	Y	Y	Y

The synchronization cycle time of 1 ms and below supported by each operation mode is listed in the preceding table. An error may be generated for use outside specifications.

Synchronization cycles greater than 1 ms that are integer multiples of the position loop control cycle (position loop control cycle of ES810 = 250 μs) are also supported.

7.4 Cyclic Synchronous Velocity (CSV) Mode

7.4.1 Control Block Diagram

In the cyclic synchronous velocity mode, the host controller transmits the pre-calculated target velocity 60FF to the drive cyclically and synchronously, and the drive executes velocity and torque regulation.

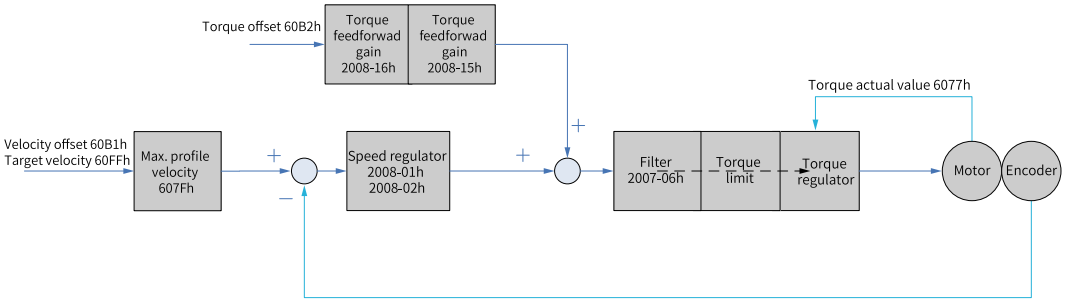

Figure 7-11 Block diagram for cyclic synchronous velocity mode

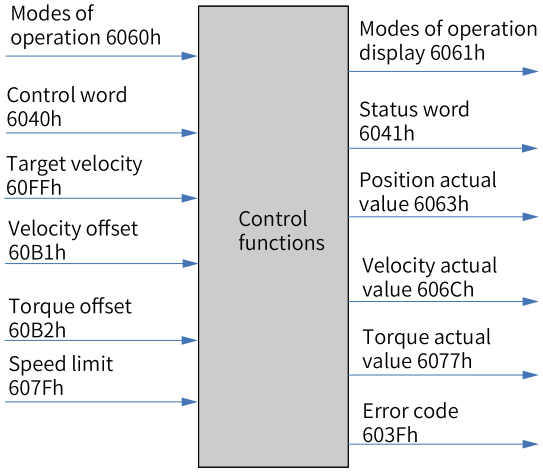

Figure 7-12 Input/Output objects

The speed limit is determined by the smaller of maximum motor speed and the value of 607Fh.

7.4.2 Related Objects

Control word 6040h		
bit	Name	Description
0	Switch on	If bit0 to bit3 are all 1, the drive starts.
1	Enable voltage	
2	Quick stop	
3	Enable operation	
8	Halt	• 0: The drive acts according to the setting of bit0 to bit3. • 1: The drive halts according to 605Dh.
Status word 6041h		
bit	Name	Description

Control word 6040h		
10	Target reach	• 0: Inactive • 1: Active
12	Drive follow the command value	• 0: Inactive • 1: Active
13	-	Not assigned
15	Home found	• 0: Inactive • 1: Active

Index (Hex)	Sub-index (Hex)	Name	Access	Data type	Unit	Value range	Default value
603F	00	Error code	RO	UINT16	-	0 to 65535	0
6040	00	Control word	RW	UINT16	-	0 to 65535	0
6041	00	Status word	RO	UINT16	-	0 to xFFFF	0
6060	00	Operation mode	RW	INT8	-	0 to 10	0
6061	00	Modes of operation display	RO	INT8	-	0 to 10	0
6063	00	Position feedback	RO	INT32	Encoder unit	-	-
6064	00	Position feedback	RO	INT32	Reference unit	-	-
606C	00	Actual speed	RO	INT32	Reference unit/s	-	-
6077	00	Torque actual value	RO	INT16	0.1%	-5000 to +5000	0
607F	00	Maximum speed	RW	UDINT32	Reference unit/s	0 to (2^{32} - 1)	^{230}
6083	00	Acceleration	RW	UDINT32	Reference unit/s^2	0 to (2^{32} - 1)	100
6084	00	Deceleration	RW	UDINT32	Reference unit/s^2	0 to (2^{32} - 1)	100
60B1	00	Speed offset	RW	INT32	Reference unit/s	-2^{31} to (2^{32} - 1)	0
60B2	00	Torque offset	RW	INT32	0.1%	-5000 to +5000	0
60E0	00	Positive torque limit	RW	UINT16	0.1%	0 to 5000	5000
60E1	00	Negative torque limit	RW	UINT16	0.1%	0 to 5000	5000
60FF	00	Target speed	RW	INT32	Reference unit/s	-2^{31} to (2^{32} - 1)	0
2007	06	Torque filter time constant	RW	UINT16	0.01 ms	0 to 3000	79
2008	01	Speed loop gain	RW	UINT16	0.01 Hz	1 to 20000	250
	02	Speed loop integral time	RW	UINT16	0.01 ms	15 to 51200	3183
	15	Torque feedforward filter time	RW	UINT16	0.01 ms	0 to 6400	50
	16	Torque feedforward gain	RW	UINT16	0.1%	0 to 2000	0

7.4.3 Related Function Setting

Speed arrival function

Index	Sub-index	Name	Description
606Dh	00	Speed arrival threshold	When the difference between 60FFh (converted into motor speed/rpm) and actual motor speed is within ±606Dh, and such state lasts for the time defined by 606Eh, the speed is reached. In this case, bit10 of status word 6041h is set to 1 and the speed arrival DO signal is activated. This flag bit is active only when the S-ON signal is active in profile position mode and cyclic synchronous velocity mode.
606Eh	00	Velocity window time	

7.4.4 Recommended Configuration

The basic configuration for cyclic synchronous velocity mode is described in the following table.

RPDO	TPDO	Remarks
6040: Control word	6041: Status word	Mandatory
60FF: Target velocity	-	-
-	6064: Position actual value	Optional
-	606C: Velocity actual value	Optional
6060: Modes of operation	6061: Modes of operation display	Optional

7.5 Homing (HM) Mode

7.5.1 Control Block Diagram

The homing mode is used to search for the mechanical home and determine the position relation between the mechanical home and mechanical zero.

Mechanical home: Refers to a fixed position on the device, which can correspond to a certain home switch and motor Z signal.

Mechanical zero: Refers to the mechanical absolute zero position.

After homing is done, the motor stops at the mechanical home.
The relationship between the mechanical home and mechanical zero point can be set in 607Ch.

Mechanical home= Mechanical zero point + 607Ch (Home offset)

When 607Ch is set to 0, the mechanical zero point overlaps with the mechanical home.

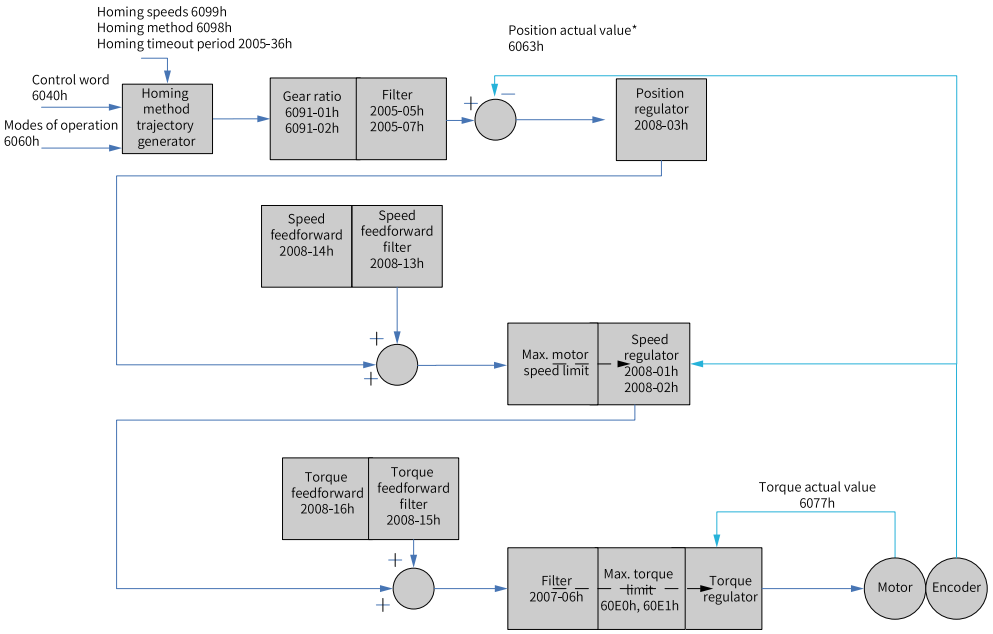

Figure 7-13 Control block diagram for the homing mode

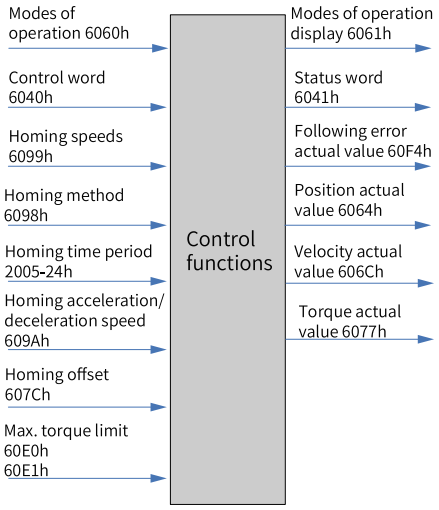

Figure 7-14 Input/Output objects

The speed limit is determined by the smaller of maximum motor speed and the value of 607Fh.

7.5.2 Related objects

Control word 6040h			
bit	Name	Description	
0	Switch on	1: Active; 0: Inactive	If bit0 to bit3 are all 1, the drive starts.
1	Enable voltage	1: Active; 0: Inactive	
2	Quick stop	1: Inactive; 0: Active	
3	Enable operation	1: Active; 0: Inactive	
4	Homing start	• 0->1: Homing start • 1: Homing in progress • 1->0: Homing end	

Control word 6040h		
8	Halt	• 0: The drive determines whether to start homing according to the setting of bit4. • 1: The drive halts according to 605Dh.
10	Target reached	• 0: Inactive • 1: Active
12	Homing attained	• 0: Inactive • 1: Active (This flag bit is active when the "target reach" signal is set in the homing mode.)
13	Homing error	• 0: Inactive • 1: Homing timeout or excessive deviation occurred
15	Home found	• 0: Inactive • 1: Active (This flag bit is set upon encountering the home signal.)

Index (Hex)	Sub-index (Hex)	Name	Access	Data type	Unit	Value range	Default value
603F	00	Error code	RO	UINT16	-	0 to 65535	0
6040	00	Control word	RW	UINT16	-	0 to 65535	0
6041	00	Status word	RO	UINT16	-	0 to xFFFF	0
6060	00	Operation mode	RW	INT8	-	0 to 10	0
6061	00	Modes of operation display	RO	INT8	-	0 to 10	0
6062	00	Actual position	RO	INT32	Reference unit	-	-
6064	00	Position feedback	RO	INT32	Reference unit	-	-
6067	00	Position window	RW	UINT32	Encoder unit	0 to 65535	734
6068	00	Position window time	RW	UINT16	ms	0 to 65535	x10
6077	00	Torque actual value	RO	INT16	0.1%	-5000 to +5000	0
606C	00	Actual speed	RO	INT32	Reference unit/s	-	-
6098	00	Homing method	RW	INT8	-	1 to 35	1
6099	01	Speed during search for switch	RW	UINT32	Reference unit/s	0 to (2^{32} - 1)	100
	02	Speed during search for zero	RW	UINT32	Reference unit/s	10 to (2^{32} - 1)	100
609 A	00	Acceleration	RW	UDINT32	Reference unit/s^2	0 to (2^{32} - 1)	100
2005	24	Timeout period	RW	UINT16	10 ms	100 to 65535	50000
60F4	00	Position deviation	RO	DINT32	Reference unit	-	-

7.5.3 Related Function Setting

Homing timeout

Index	Sub-index	Name	Description
2005	24	Homing timeout period	If homing is not done within the set period, Er.601 will be detected, indicating homing timeout.

Current position calculation method

Index	Sub-index	Name	Description
60E6	00	Current position calculation method	60E6 determines whether to use absolute homing or relative homing in an incremental system. • 60E6 = 0 (Absolute homing): After homing is completed, the position actual value (6064) is set to the home offset (607C). • 60E6h = 1 (Relative homing): After homing is done, 6064h (Position actual value) is superimposed with the value of 607Ch (Home offset).

7.5.4 Recommended Configuration

The basic configuration for the profile torque mode is shown in the following table.

RPDO	TPDO	Remarks
6040: Control word	6041: Status word	Mandatory
6098: Homing method	-	Optional
6099-01: Speed during search for switch	-	Optional
6099-02: Speed during search for zero	-	Optional
609A: Homing acceleration	-	Optional
-	6064: Position actual value	Optional
6060: Modes of operation	6061: Modes of operation display	Optional

7.6 Motor Protection Function

Motor overload protection

The motor generates heat continuously due to thermal effect of the current after power-on. The heat is then dissipated to the surroundings. The drive provides motor overload protection to protect the motor against damage due to high temperature when the heat generated exceeds the heat released.

Set the motor overload protection gain (200A-05h) to adjust the detection time of fault Er.620. Use the default value of 200A-05h. Modify it based on the actual motor heating situation when one of the following condition occurs:

- The servo motor works in environments with high temperature.
- The motor is in the cyclic motion featuring short motion cycle and frequent acceleration/ deceleration.

Motor overload detection can be disabled (200A-1Bh = 1) in applications where motor burnout is prevented.



Take caution when masking the motor overload fault as it may damage the motor.

Table 7–21 200A-05h: Motor overload protection gain

Name	Description	Name	Description
Access	RW	Mapping	-
Setting condition & Effective time	During running & Real time	Related modes	-
Data structure	-	Data range	50 to 300 (%)
Data type	Uint16	Default	100

Defines the motor overload duration before Er.620 is detected.

You can change the setpoint based on motor temperature to reduce or prolong the time to trigger overload protection. The setpoint 50% indicates the trigger time is reduced by 50%. The setpoint 150% indicates the trigger time is prolonged by 50%.

Caution

Set this parameter based on the actual heating condition of the motor.

Table 7–22 200A-1Bh: Motor overload mask enable

Name	Description	Name	Description
Access	RW	Mapping	-
Setting condition & Effective time	At stop & Real time	Related modes	-
Data structure	-	Data range	0 to 1
Data type	Uint16	Default	0

Defines whether to enable motor overload detection.

Setpoint	Description
0	Enable motor overload detection
1	The motor overload alarm (Er.909) and fault (Er.620) are masked.

Caution

Take caution when masking the motor overload fault as it may damage the motor.

Motor stall overtemperature protection

When the motor is stalled, the motor speed is nearly 0 rpm at high current input. In this case, the motor can be overheated significantly. The motor is capable of operating upon stall for an allowable period of time, exceeding of which can damage the motor due to overtemperature. To prevent such a risk, the drive offers motor stall overtemperature protection to prevent the motor from overheating and burning under stall conditions.

You can set the detection time of Er.630 through 200A-21h, and set the motor stall overtemeprature protection through 200A-22h (enabled by default).

Caution

To prevent damages to the motor, take caution when you use the motor stall overtemperature protection function.

Table 7–23 200A-21h: Overtemperature protection time window upon stall

Name	Description	Name	Description
Access	RW	Mapping	-
Setting condition & Effective time	During running & Real time	Related modes	P
Data structure	-	Data range	10 to 65535 (ms)
Data type	Uint16	Default	200

Defines the time threshold for detecting overtemperature fault upon stall (Er.630).

You can adjust the fault detection sensitivity through 200A-21h.

Table 7–24 200A-22h: Overtemperature protection enable upon motor stall

Name	Description	Name	Description
Access	RW	Mapping	-
Setting condition & Effective time	During running & Real time	Related modes	-
Data structure	-	Data range	0 to 1
Data type	Uint16	Default	1

Defines whether to enable the detection for Er.630 (Motor stall overtemperature protection).

Setpoint	Description
0	Disable detection of motor stall overtemperature protection (Er.630)
1	Enable detection of motor stall overtemperature protection (Er.630)

Motor overspeed protection

An excessively high speed may cause damage to the motor or the machine. Therefore, the drive provides motor overspeed protection function.

Disable runaway protection function with caution. In the applications where the motor drives a vertical axis or is driven by the load, set 200A-0Dh to 0 to disable runaway fault detection.

Table 7–25 200A-09h: Overspeed threshold

Name	Description	Name	Description
Access	RW	Mapping	-
Setting condition & Effective time	During running & Real time	Related modes	PST
Data structure	-	Data range	0 to 10000 (rpm)
Data type	Uint16	Default	0

Defines the overspeed threshold of the motor.

Setpoint	Overspeed threshold	Condition for reporting Er.500
0	Maximum motor speed x 1.2	After detecting that the feedback speed is higher than the overspeed threshold for several times, Er.500 (Overspeed fault) can be reported.
1 to 10000	If 200A-09h ≥ (maximum motor speed x 1.2),	overspeed threshold = maximum motor speed x 1.2.
	If 200A-09h < (maximum motor speed x 1.2),	overspeed threshold = 200A-09h.

Table 7–26 200A-0Dh: Enable runaway protection enable

Name	Description	Name	Description
Access	RW	Mapping	-
Setting condition & Effective time	During running & Real time	Related modes	PST
Data structure	-	Data range	0 to 1
Data type	Uint16	Default	1

Defines whether to enable the runaway protection function.

Setpoint	Description	Remarks
0	Disabled	In applications where the motor drives a vertical axis or is driven by load, set 200A-0Dh to 0 to disable runaway fault (Er.234) detection.
1 to 10000	Enable	Enable the runaway protection function.

Besides runaway protection, you can also set the speed limit in speed control mode and torque control mode to protect the motor and machine.

7.7 Use of the Absolute Value System

7.7.1 Descriptions of Absolute Value System

Overview

The absolute encoder, which carries a resolution of 8388608 (2^{23}) PPR, detects the motor position within one revolution and counts the number of revolutions, with 16-bit multi-turn data recorded. The absolute system integrated with the absolute encoder works in absolute position linear mode or absolute position rotation mode. These modes apply to position control, speed control, and torque control modes. The absolute encoder with a battery can back up data when the drive is powered off. This enables the drive to calculate the absolute mechanical position at power-on, removing the need for repeated mechanical homing operation.

When using the absolute value encoder for ES810, set 2000-01h to 14101 (Inovance 23-bit absolute encoder) and set 2002-02h (Absolute system selection) based on actual conditions. Er.731 is reported when the battery is connected for the first time. Set 200D-15h to 1 to reset the encoder fault and perform the homing operation.

Note

Note: When you change 2002-03h (Rotation direction selection) or 200D-15h (Absolute encoder reset enable), an abrupt change occurs in the encoder absolute position, causing change of the absolute position reference. Therefore, you need to perform the mechanical homing operation. After homing is done, the deviation between the mechanical absolute position and that recorded in the absolute encoder will be calculated automatically and saved in the EEPROM of the servo drive.

Setting related index codes

1. Absolute value system setting

Set 2000-01h to 14101 to select Inovance 23-bit absolute encoder motor, and select the absolute position mode in 2002-02h.

Table 7–27 2000-01h: Motor code

Name	Description	Name	Description
Access	RW	Mapping	-
Setting condition & Effective time	At stop & Next power-on	Related modes	-
Data structure	-	Data range	0 to 65535
Data type	Uint16	Default	14000

Table 7–28 2002-02h: Absolute value system selection

Name	Description	Name	Description
Access	RW	Mapping	-
Setting condition & Effective time	At stop & Next power-on	Related modes	All
Data structure	-	Data range	0 to 2
Data type	Uint16	Default	0

Note

In absolute position mode, the system automatically detects the motor code to check whether absolute encoder motor is used. If the setting is incorrect, Er.122 is reported.

2. Encoder feedback data

The feedback data of the absolute encoder includes the encoder revolution count and the position within single-turn of the encoder. In incremental position mode, the encoder revolution count is not available.

Table 7–29 200B-47h: Absolute encoder revolution count

Name	Description	Name	Description
Access	RO	Mapping	TPDO
Setting condition & Effective time	-	Related modes	All
Data structure	-	Data range	-
Data type	Uint16	Default	-

Table 7–30 200B-48h: Absolute encoder single-turn position feedback

Name	Description	Name	Description
Access	RO	Mapping	TPDO
Setting condition & Effective time	-	Related modes	All
Data structure	-	Data range	-
Data type	Int32	Default	-

Table 7–31 200B-4Eh: Low-order 32 bits of absolute position of absolute encoder

Name	Description	Name	Description
Access	RO	Mapping	TPDO
Setting condition & Effective time	-	Related modes	All
Data structure	-	Data range	-
Data type	Int32	Default	-

Table 7–32 200B-50h: High-order 32 bits of absolute position of absolute encoder

Name	Description	Name	Description
Access	RO	Mapping	TPDO
Setting condition & Effective time	-	Related modes	All
Data structure	-	Data range	-
Data type	Int32	Default	-

The number of absolute encoder revolutions (200B-47h) is an unsigned number ranging from 0 to 65535. If the encoder resolution is R_E ($R_E = 2^{23}$), the value of 200B-48h (Position of the absolute encoder within one turn) ranges from 0 to R_E.

The absolute position (200B-50h x 2^{32} + 200B-4Eh) is calculated based on the feedback data (200B-47h, 200B-48h) and encoder resolution (R_E).

When the value of 200B-47h is lower than 32768: (200B-50h x 2^{32} + 200B-4Eh) = 200B-47h x R_E + 200B-48h

When the value of 200B-47h is higher than or equal to 32768: (200B-50h x 2^{32} + 200B-4Eh) = (200B-47h - 65536) x R_E + 200B-48h

3. Absolute position linear mode

Table 7–33 2005-2Fh: Low-order 32 bits of position offset in absolute position linear mode

Name	Description	Name	Description
Access	RW	Mapping	-
Setting condition & Effective time	At stop & Real time	Related modes	All
Data structure	-	Data range	-2^{31} to (2^{31} - 1)
Data type	Int32	Default	0

Table 7–34 2005-31h: High-order 32 bits of position offset in absolute position linear mode

Name	Description	Name	Description
Access	RW	Mapping	-
Setting condition & Effective time	At stop & Real time	Related modes	All
Data structure	-	Data range	-2^{31} to $(2^{31} - 1)$
Data type	Int32	Default	0

Table 7–35 200B-08h: Absolute position counter

Name	Description	Name	Description
Access	RO	Mapping	-
Setting condition & Effective time	At stop & Real time	Related modes	All
Data structure	-	Data range	-2^{31} to $+2^{31}$
Data type	Int32	Default	0

Table 7–36 200B-3Bh: Low-order 32 bits of mechanical absolute position

Name	Description	Name	Description
Access	RO	Mapping	-
Setting condition & Effective time	-	Related modes	All
Data structure	-	Data range	-
Data type	Int32	Default	-

Table 7–37 200B-3Dh: High-order 32 bits of mechanical absolute position

Name	Description	Name	Description
Access	RO	Mapping	-
Setting condition & Effective time	-	Related modes	All
Data structure	-	Data range	-
Data type	Int32	Default	-

This mode is mainly applicable to the scenario where the load traveling range is fixed and the encoder multi-turn data does not overflow, as shown by the following example of a ball screw transmission mechanism.

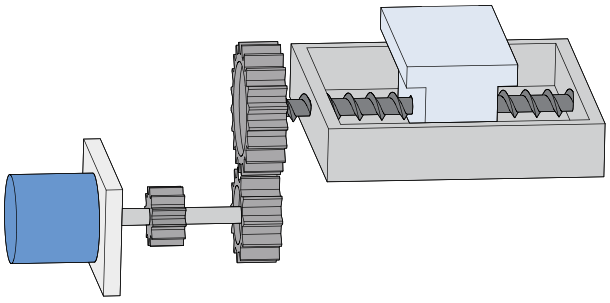

Figure 7-15 Ball screw transmission mechanism

Note

- Assume that: mechanical absolute position (200B-3Bh and 200B-3Dh) = P_M (P_M = 200B-3Dh x 2^{32} + 200B-3Bh), encoder absolute position = P_E (ranging from -2^{38} to (2^{38} - 1)), position offset in absolute position linear mode (2005-2Fh and 2005-31h) = P_O, then their relationship is as follows: $P_M = P_E - P_O$.
- Assume the electronic gear ratio is B/A, and the mechanical absolute position (reference unit) is 200B-08h, then the following formula applies: 200B-08h = P_M /(B/A)
- The offset of the absolute position linear mode (2005-2Fh and 2005-31h) is 0 by default. If the homing operation is performed, the drive automatically calculates the deviation between the encoder absolute position and the mechanical absolute position, assigns the deviation value to 2005-2Fh and 2005-31h, and saves the values in EEPROM.
- The encoder multi-turn data range of the absolute position linear mode is -32768 to +32767. If the number of forward revolutions is larger than 32767 or the number of reverse revolutions is smaller than -32768, Er. 735 occurs, indicating the encoder multi-turn overflow fault. Set 200A-25h to mask this fault.

4. Absolute position rotation mode

Table 7–38 2005-33h: Mechanical gear ratio (numerator) in absolute position rotation mode

Name	Description	Name	Description
Access	RW	Mapping	-
Setting condition & Effective time	At stop & Real time	Related modes	All
Data structure	-	Data range	1 to 65535
Data type	Uint16	Default	1

Table 7–39 2005-34h: Mechanical gear ratio (denominator) in absolute position rotation mode

Name	Description	Name	Description
Access	RW	Mapping	-
Setting condition & Effective time	At stop & Real time	Related modes	All
Data structure	-	Data range	1 to 65535
Data type	Uint16	Default	1

Table 7–40 2005-35h: Pulses per load revolution in absolute position rotation mode (32 low-order bits)

Name	Description	Name	Description
Access	RW	Mapping	-
Setting condition & Effective time	At stop & Real time	Related modes	All
Data structure	-	Data range	0 to (2^{32} - 1)
Data type	Uint32	Default	0

Table 7–41 2005-37h: Pulses per load revolution in absolute position rotation mode (32 high-order bits)

Name	Description	Name	Description
Access	RW	Mapping	-
Setting condition & Effective time	At stop & Real time	Related modes	All
Data structure	-	Data range	0 to 127
Data type	Uint32	Default	0

Table 7–42 200B-3Bh: Low-order 32 bits of mechanical absolute position

Name	Description	Name	Description
Access	RO	Mapping	-
Setting condition & Effective time	-	Related modes	All
Data structure	-	Data range	-
Data type	Int32	Default	-

Table 7–43 200B-3Dh: High-order 32 bits of mechanical absolute position

Name	Description	Name	Description
Access	RO	Mapping	-
Setting condition & Effective time	-	Related modes	All
Data structure	-	Data range	-
Data type	Int32	Default	-

Table 7–44 200B-4Eh: Low-order 32 bits of absolute position of absolute encoder

Name	Description	Name	Description
Access	RO	Mapping	TPDO
Setting condition & Effective time	-	Related modes	All
Data structure	-	Data range	-
Data type	Int32	Default	-

Table 7–45 200B-50h: High-order 32 bits of absolute position of absolute encoder

Name	Description	Name	Description
Access	RO	Mapping	TPDO
Setting condition & Effective time	-	Related modes	All
Data structure	-	Data range	-
Data type	Int32	Default	-

Table 7–46 200B-52h: Low-order 32 bits of rotary load single-turn position

Name	Description	Name	Description
Access	RO	Mapping	TPDO
Setting condition & Effective time	-	Related modes	All
Data structure	-	Data range	-
Data type	Uint32	Default	-

Table 7–47 200B-54h: High-order 32 bits of rotary load single-turn position

Name	Description	Name	Description
Access	RO	Mapping	TPDO
Setting condition & Effective time	-	Related modes	All
Data structure	-	Data range	-
Data type	Uint32	Default	-

Table 7–48 200B-56h: Single-turn position of rotary load

Name	Description	Name	Description
Access	RO	Mapping	TPDO
Setting condition & Effective time	-	Related modes	All
Data structure	-	Data range	-
Data type	Uint32	Default	-

This mode is mainly applicable to the scenario where the load traveling range is not restricted and the number of unidirectional revolutions of the motor is lower than 32767 upon power failure, as shown in the following figure.

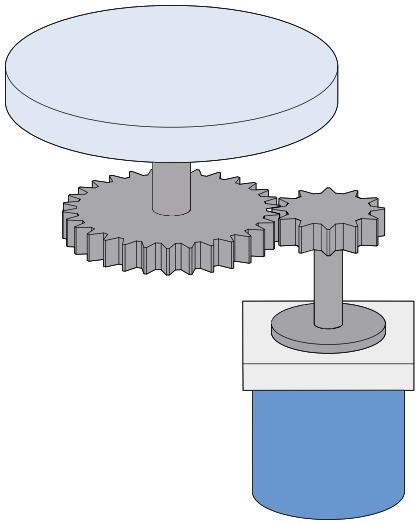

Figure 7-16 Rotary load

The drive calculates the mechanical absolute position based on 2005-35h and 2005-37h first. If 2005-35h and 2005-37h are 0, the drive performs calculation based on 2005-33h and 2005-34h.

Note

- Assume that: encoder resolution = R_E ($R_E = 2^{23}$), number of encoder pulses per load revolution = R_M, the following formula applies when 2005-35h or 2005-37h ≠ 0: R_M = 2005-37h x 2^{32} + 2005-35h; when 2005-35h and 2005-37h are both set to 0, $R_M = R_E$ x (2005-33h/2005-34h).
- Assume that: electronic gear ratio = B/A, range of the single-turn position of the rotating load (encoder unit, 200B-54h x 2^{32} + 200B-52h) = 0 to R_M, and the range of single-turn position of the rotary load (reference unit, 200B-56h) = 0 to R_M /(B/A),

  then the following formula applies:

  200B-56h = (200B-54h x 2^{32} + 200B-52h)/(B/A)

- Assume that: mechanical absolute position (200B-3Bh and 200B-3Dh) = P_M (P_M = 200B-3Dh x 2^{32} + 200B-3Bh), then the following formula applies:

  P_M = Revolutions of the turntable x R_M + (200B-54h x 2^{32} + 200B-52h)

- Assume that: electronic gear ratio = B/A, and the mechanical absolute position (reference unit) = 200B-08h, then the following formula applies:

  200B-08h = P_M /(B/A) = revolutions of turntable x R_M /(B/A) + 200B-56h

The following figure shows the relation between the single-turn position of the rotary load and the position of the turntable.

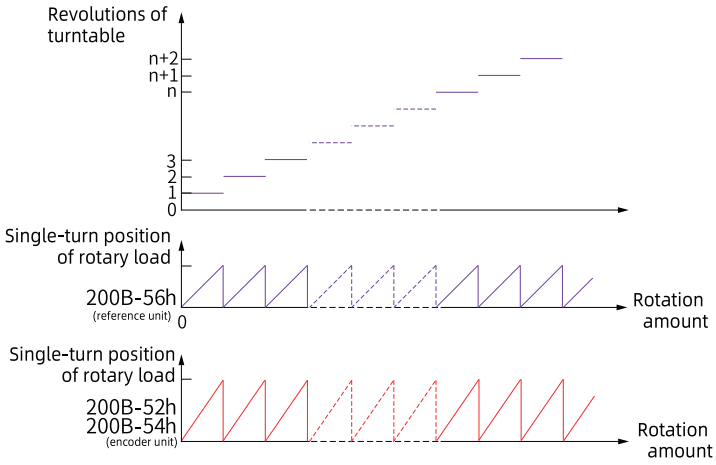

Figure 7-17 Relationship between the rotary load single-turn position and the turntable position

The multi-turn data range is not limited in absolute position rotation mode and Er.735 (Encoder multi-turn count overflow fault) is masked.

5. Encoder multi-turn overflow fault selection

200A-25h sets whether to disable detection of the multi-turn overflow fault (Er.735) in absolute position linear mode.

Table 7–49 200A-25h: Absolute encoder multi-turn overflow fault selection

Name	Description	Name	Description
Access	RW	Mapping	No
Setting condition & Effective time	At stop & Real time	Related modes	All
Data structure	-	Data range	0 to 1
Data type	Uint16	Default	0

6. Absolute encoder reset selection

200D-15h sets whether to reset the encoder internal faults or multi-turn data.

Table 7–50 200D-15h: Absolute encoder reset enable

Name	Description	Name	Description
Access	RW	Mapping	-
Setting condition & Effective time	At stop & Real time	Related modes	All
Data structure	-	Data range	0 to 2
Data type	Uint16	Default	0

Note

- The absolute position recorded by the encoder changes abruptly after multi-turn data reset. In this case, perform mechanical homing.
- 0: No operation; 1: Reset the fault; 2: Reset the fault and multi-turn data

7.7.2 Precautions for Using the Absolute System Battery Box

Er.731 (Encoder battery fault) is tripped when the battery is connected for the first time. In this case, set 200D-15h to 1 to reset the encoder fault before performing operations on the absolute position system.

When the battery voltage detected is lower than 3.0 V, Er.730 (Encoder battery alarm) occurs. In this case, replace the battery as follows.

1. Power on the drive and make it stay in the non-operational state.
2. Replace the battery.
3. The drive automatically resets Er.730. If there are no other alarms, run the drive normally.



- If you replace the battery box after power failure occurs on the drive, Er.731.(Encoder battery fault) can occur at next power-on, leading to an abrupt change in the multi-turn data. In this case, set 200D-15h to 1 to reset the encoder fault. Then perform the homing operation again.
- In the power failure state of the drive, ensure that the maximum motor speed does not exceed 6000 rpm so that the encoder position can be recorded correctly.
- Store the battery in required temperature and ensure reliable contact and sufficient electricity. Failure to comply may cause loss of the encoder position.

8 Communication

8.1 Rectifier Unit

8.1.1 Parameter Communication Address

8.1.1.1 Introduction to Parameters

Parameter communication addresses must be used to perform read, write, and other operations on parameters of the ES810 series rectifier unit. This chapter mainly describes the method of obtaining communication addresses according to parameters as well as special parameter communication addresses for Modbus communication. Parameter communication addresses are often written as parameter addresses or function addresses in this chapter.

The parameters of the ES810 series rectifier unit are divided into basic function parameters and monitoring function parameters. They are saved in corresponding parameters.

Basic function parameters are saved in groups F and A, as shown in the following table:

ES810 parameter data	Group F (read/ write)	F0, F1, F2, F3, F4, F5, F6, F7, F8, F9, FA, FB, FC, Fd, FE, FF
	Group A (read/ write)	A0, A1, A2, A3, A4, A5, A6, A7, A8, A9, AA, AB, AC, AD, AE, AF
	Group B (Read/ Write)	B0, B1, B2

The following table shows the addresses of the monitoring function parameters, including the operation command, operation status, operation parameters, and alarm information.

ES810 monitoring function parameters	Status data (read-only)	U0, 8000H
	Control parameters (write-only)	U3, 1000H

8.1.1.2 Description of Parameter Communication Address

There are multiple function parameters in each of the parameter groups F0 to FF, A0 to AF, and B0 to B2. For example, F0-16 indicates parameter number 16 in group F0. The high-order 16 bits in the communication address of a function parameter represent the parameter group number. The low-order 16 bits represent the hexadecimal format of the parameter serial number in the parameter group.

For example, the communication address of F0-16 is 0xF010.

In addition, writing basic function parameters and saving them upon power failure trigger frequent operations on the EEPROM, which reduces the EEPROM service life. Therefore, you can modify some basic function parameters in the RAM through communication without saving them.

See the following table for details.

For parameters in groups F0 to FE, to obtain the RAM address, change the high-order bit F of the parameter address to 0.

For parameters in groups A0 to FA, to obtain the RAM address, change the high-order bit A of the parameter address to 4.

That is, the communication RAM address of F3-12 is 0x030C. The communication RAM address of A0-05 is 0x4005.

Parameter group No.	Communication address	Parameter address in RAM changed via communication
Groups F0 to FE	0xF000 to 0xFEFF	0x0000 to 0x0EFF
Groups A0 to AF	0xA000 to 0xACFF	0x4000 to 0x4CFF
Groups B0 to BF	0xB000 to 0xBFFF	0x5000 to 0x5FFF
U0	0x7000 to 0x70FF	-

Note

- Group FF: The parameters cannot be read or modified.
- Group U0: Parameters can be read, but cannot be modified.
- 1000H and 8000H are Modbus-specific communication addresses. Some functions are the same as those in group U.
- Only the write operation can be performed on communication RAM addresses. They are invalid addresses during the read operation.
- Some parameters cannot be changed when the drive is in the operation state.
- Some parameters cannot be changed regardless of states of the drive.
- When modifying a parameter, pay attention to the range, unit, and description of the parameter.

8.1.1.3 Modbus-Specific Parameter Communication Address

Parameter address	Description
Communication monitoring parameters	
1000H	• Communication setpoint (decimal): -10000 to +10000 • The communication setpoint is a percentage of the relative value. For example, +10000 and -10000 correspond to +100.00% and -100.00%, respectively. • For frequency dimension data, this value is a percentage to the maximum frequency (F0-10). For torque dimension data, this value is a percentage to F2-10 (Digital reference of torque upper limit).
Control commands input to the rectifier unit: (Write-only)	
7311H	• 0000: Stop mode set by F6-10 (Stop mode) • 0001: Forward run • 0002: Reverse run • 0003: Forward jog • 0004: Reverse jog • 0005: Coast to stop • 0006: Decelerate to stop • 0007: Fault reset
Read the rectifier unit status	
703DH	• 0001: Forward run • 0002: Reverse run • 0003: Stop • 0004: Auto-tuning • 0005: Fault
Parameter lock password check	

Parameter address	Description
1F00H	If the value returned is the actual password, it indicates the password passes the verification. (If password protection is not applied, namely the password is 0, the returned value is 0000H.)
DO terminal control	
7312H	• bit0: DO1 output control • bit1: DO2 output control • bit2: Relay 1 output control • bit3: Reserved • bit4: FMR output control • bit5 to bit9: Reserved
Pulse output control	
7315H	0 to 7FFF represent 0% to 100%.
Description of rectifier unit faults	
8000H	• 0000: Normal • 0001: Hardware fault • 0002: Overcurrent during acceleration • 0003: Overcurrent during deceleration • 0004: Overcurrent during operation at constant speed • 0005: Overvoltage during acceleration • 0006: Overvoltage during deceleration • 0007: Overvoltage during operation at constant speed • 0009: Undervoltage • 000A: AC drive overload • 000B: Motor overload • 000C: Input phase loss • 000D: Output phase loss • 000E: Module overtemperature • 000F: External fault • 0010: Communication error • 0013: Motor auto-tuning fault • 0014: Encoder/PG card fault • 0015: Parameter read/write error • 0016: Motor auto-tuning result error • 0017: Motor ground fault • 0018: Phase-to-phase short circuit • 0019: Rectifier fault • 001A: Operating time reached • 001B: User-defined fault 1 • 001C: User-defined fault 2 • 001D: Power-on time arrival • 001E: Load loss • 001F: PID feedback loss during operation • 002A: Excessive speed deviation • 002B: Motor overspeed • 002D: Motor overtemperature • 0050: Fan fault

8.1.2 Modbus Communication

8.1.2.1 Modbus Communication Protocol

The ES810 series rectifier unit and inverter unit provide the RS485 communication interface and support the Modbus-RTU communication protocol. You can implement centralized control by using a PC or PLC and set the operation commands, modify or read parameters, and read the operating status and fault information of the product through the communication protocol.

This serial communication protocol defines the content and format of transmitted messages during serial communication, which includes the master polling (or broadcasting) format and master coding method for the action, transmission data, error check, and so on. The slave uses the same structure for response, including action acknowledgment, data return, and error check. If an error occurs when the slave receives a message, or the slave cannot perform the action required by the master, the slave returns a fault message as a response to the master.

Application

The product is connected to a "single-master multi-slave" PC/PLC control network equipped with RS485 bus to act as a communication slave.

Bus structure

- Topology
  The system consists of one master and multiple slaves. Each communication device in the network has a unique slave address. One device as a communication master (generally the PC, host controller, PLC, or HMI) that actively initiates communication to perform the parameter read or write operation on salves. Other devices as communication slaves that respond to the master inquiry or communication operation. At the same moment, only one device can transmit data and the other can only receive data.

  The address range of the slaves is 1 to 247, and 0 is the broadcast address. A slave address must be unique in the network.

- Communication transmission mode
  The asynchronous serial and half-duplex transmission mode is used. During asynchronous serial communication, data is sent frame by frame in the form of packets. According to the Modbus RTU protocol, an interval that is longer than the transmission time of 3.5 bytes on the communication data line marks the start of a new communication frame.

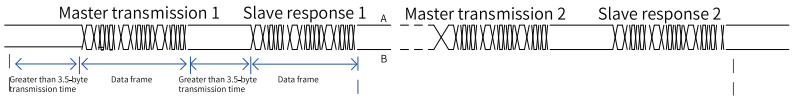

  The built-in communication protocol used by ES810 is the Modbus-RTU slave communication protocol, which allows the device to provide data to respond to "query/command" from the master or execute the action according to "query/command" from the master.

  A master can be a PC, an industrial control device or a PLC. A master can separately communicate with a slave or send broadcast information to all slaves. When the master sends a "query/command" to a single slave, the slave needs to return a response frame. The slave does not need to respond to a broadcast message sent by the master.

8.1.2.2 Networking

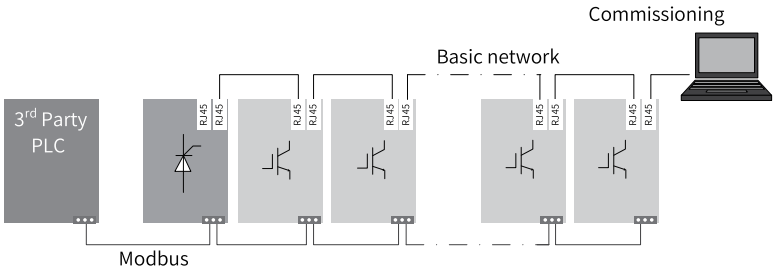

Figure 8-1 Modbus communication networking

8.1.2.3 Terminal Descriptions

The terminal names of 3-pin connection terminals are C485+, C485- and CGND from left to right, as shown below.

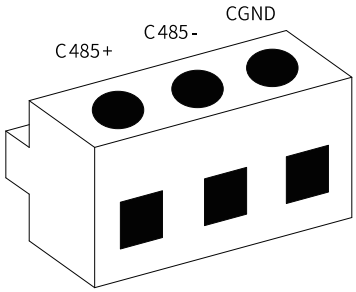

Figure 8-2 3-pin connection terminal

8.1.2.4 Communication Performance

1. A maximum of 128 nodes are supported, with a maximum baud rate of 115.2 Kbps. In this case, the maximum communication distance is 100 m.
2. The maximum transmission distance at the baud rate of 9.6 kbps is 1 km.

8.1.2.5 Related Parameter Setting

Param.	Name	Default value	Value range		Description
Fd-00	Modbus baud rate	5	• 0: 300 bps • 1: 600 bps • 2: 1200 bps • 3: 2400 bps • 4: 4800 bps	• 5: 9600 bps • 6: 19200 bps • 7: 38400 bps • 8: 57600 bps • 9: 115200 bps	Defines data transmission rate between the host controller and the rectifier unit. The higher the baud rate is, the faster the communication can be. The baud rate of the host controller must be the same as that of the rectifier unit. Otherwise, communication can fail.
Fd-02	Modbus local address	1	1–247 (0 is the broadcast address.)		When the local address is set to 0 (that is, the broadcast address), the broadcasting function of the host controller is implemented. The local address is unique (except the broadcast address), which is the basis for point-to-point communication between the host controller and this product.
Fd-03	Modbus response delay	2	0 to 20		Used to set the time interval from the time when the drive finishes data reception to the time when the drive starts to send data to the host controller. If the response delay is shorter than the system processing time, the system processing time prevails. If the response delay is longer than the system processing time, the drive will send data to the host controller only after the system finishes data processing and the response delay expires.
Fd-04	Modbus communi-cation timeout period	0.0	0.0 (Inactive), 0.1s to 60.0s		When it is set to 0.0s, the communication timeout period is inactive. This parameter is generally set to 0. This parameter is used to monitor communication status in a system with continuous communication. When it is set to an active value, if the communication interval between current communication and the next communication exceeds the value of Fd-04, the system reports a communication fault (Err16).

8.1.2.6 Communication Data Frame Structure

The communication data format of Modbus-RTU protocol is as follows. This product only supports read-write of word-type parameters. The read command is 0x03 and the write command is 0x06. The command for writing multiple parameters is 0x10. Bytes or bits cannot be read or written.

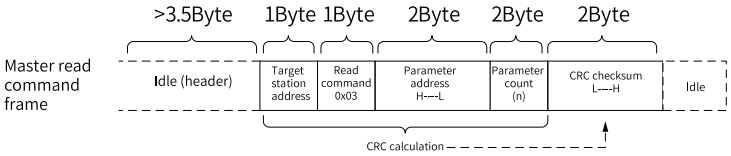

In theory, the host controller can read N consecutive parameters (N ≤ 12) at a time. Note that these parameters must be in the same parameter group; otherwise, a response error will occur.

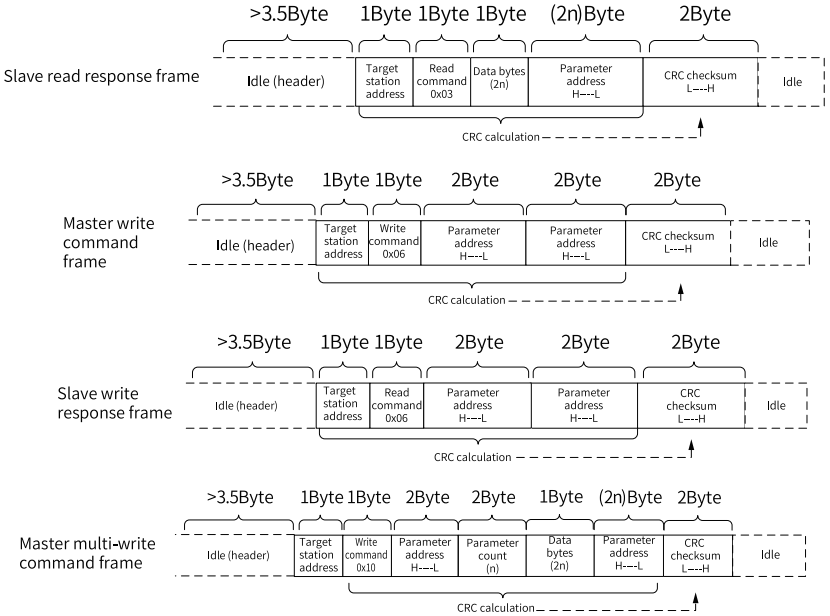

A maximum of 12 consecutive parameters can be read or written.

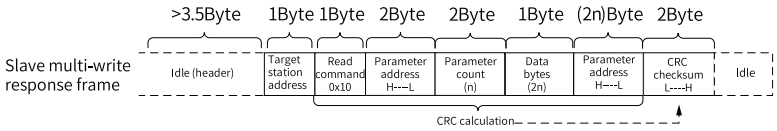

If the slave detects a communication frame error or reading/writing failure caused by other reasons, an error frame will be returned.

Note: No response will be generated for CRC check error.

The command for a reading error responded by the slave is 0x83. The command for a writing error responded by the slave is 0x86. The command for a multi-write error responded by the slave is 0x90.

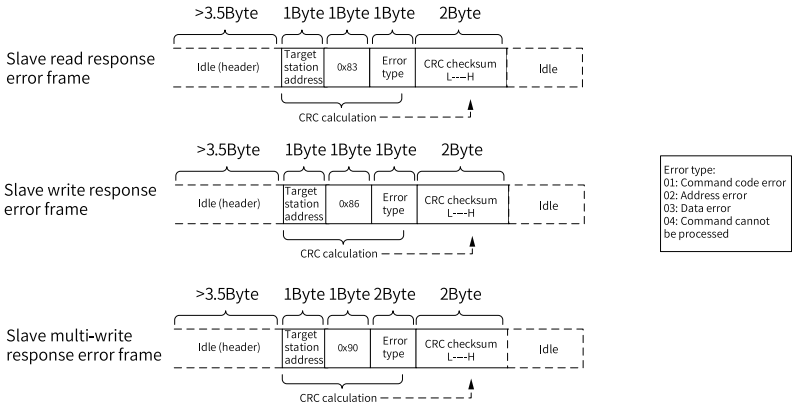

Table 8–1 Data frame fields

Frame header: START	Idle time greater than 3.5-character transmission time
Slave address (ADR)	Communication address range: 1 to 247; 0: Broadcast address
Command code: CMD	• 03H: Read slave parameters • 06: Write slave parameters • 10: Multi-slave parameter writing
Parameter address (H)	Parameter addresses of the drive are represented in hexadecimal, which are divided into parameter type and non-parameter type (such as operating state parameters or operating commands). For details, see address definitions. Big endian mode applied during transmission
Parameter address L	
Parameter count (H)	Indicates the number of parameters read by this frame. If it is 1, one parameter is read. Big endian mode applies during transmission. Only one parameter can be written at a time in this protocol. This field does not exist.
Parameter count (L)	
Data bytes	The data length is twice the parameter count.
Data (H)	Response data or data to be written. The big endian mode applies during transmission.
Data (L)	
CRC low-order bits	Detection value: CRC16 check value. The little endian mode applies during transmission. For the calculation method, see the details of CRC check.
CRC high-order bits	
END	At 3.5-character

CRC check mode:

CRC (Cyclical Redundancy Check) uses the RTU frame format. A Modbus message includes an error detection domain based on CRC method. The CRC field detects the content of the entire message. The CRC field consists of two bytes, including a 16-bit binary value. It is added to the message after being calculated by the transmission device. The reception device recalculates CRC of received messages that is compared with the value in the received CRC domain. If both CRC values are unequal, it indicates that a transmission error occurs.

The CRC calculation initializes the register with 0xFFFF, then executes a process that sequentially processes consecutive 8-bit bytes of the message using the current register value. Only the eight bits in each character are used for the CRC. The start bit, stop bit, and parity bit do not apply to the CRC.

During generation of the CRC, each eight-bit character is in exclusive-OR (XOR) with the content in the register. Then the result is shifted in the direction of the least significant bit (LSB), with a zero filled into the most significant bit (MSB) position. The LSB is extracted and examined. If the LSB was 1, the register then performs XOR with a preset value. If the LSB was 0, no XOR is performed. This process is repeated until eight shifts have been performed. After the last (eighth) shift, the next

eight-bit byte is in XOR with the register's current value, and the process repeats for eight more shifts as described above. The final value in the register, after all the bytes in the message have been applied, is the CRC value.

When CRC is added in a message, high order bytes follow low order bytes. The CRC simple function is as follows.

```
unsigned int crc_chk_value（unsigned char *data_value,unsigned char length）
{
unsigned int crc_value=0xFFFF;
      int i;
      while（length--）
     {
            crc_value^=*data_value++;
            for（i=0;i<8;i++）
            {
                  if（crc_value&0x0001）
            {
                        crc_value=（crc_value>>1）^0xa001;
                  }
                  else
                  {
                        crc_value=crc_value>>1;
                  }
            }
      }
return（crc_value）;
}
```

8.2 Inverter Unit

8.2.1 Introduction To EtherCAT Protocol

EtherCAT features high performance, low cost, ease of use, and flexible topology. It is applicable to ultra high-speed I/O networks in the industrial field, and adopts standard Ethernet physical layer with twisted pair or optical fiber (100Base-TX or 100Base-FX) as the transmission media.

An EtherCAT system includes the master and slave. The master requires a common network adapter, and the slave requires a special slave control integrated circuit, such as ET1100, ET1200, and FPGA.

EtherCAT can process data even at I/O layer.

- No lower-layer sub-bus required
- Extremely low gateway latency
- One system covers all devices,
  - including input/output devices, sensors, activators, drives, and displays.
- Transmission rate:
  - 2 x 100 Mbit/s (high-speed Ethernet, full duplex mode).
- Synchronization: When the cable length is 120 m and the number of nodes between two devices is 300, the synchronization jitter is smaller than 1 μs.
- Refresh time:
  - 256 digital I/Os: 11 μs
  - 1000 digital I/Os distributed in 100 nodes: 30 μs = 0.03 ms
  - 200 analog I/Os (16-bit): 50 μs, sampling rate 20 kHz
  - 100 servo axes (8 byte IN+OUT for each): 100 μs = 0.1 ms
  - 12000 DI/DOs: 350 μs

To support devices of various types and wider applications, the following EtherCAT-based application protocols are established:

- CANopen over EtherCAT (CoE)
- Safety over EtherCAT (SoE, servo drive safety compliant with IEC 61800-7-204)
- Ethernet over EtherCAT (EoE)
- File over EtherCAT (FoE)

The slave device only needs to support the suitable application protocol.

8.2.2 Networking

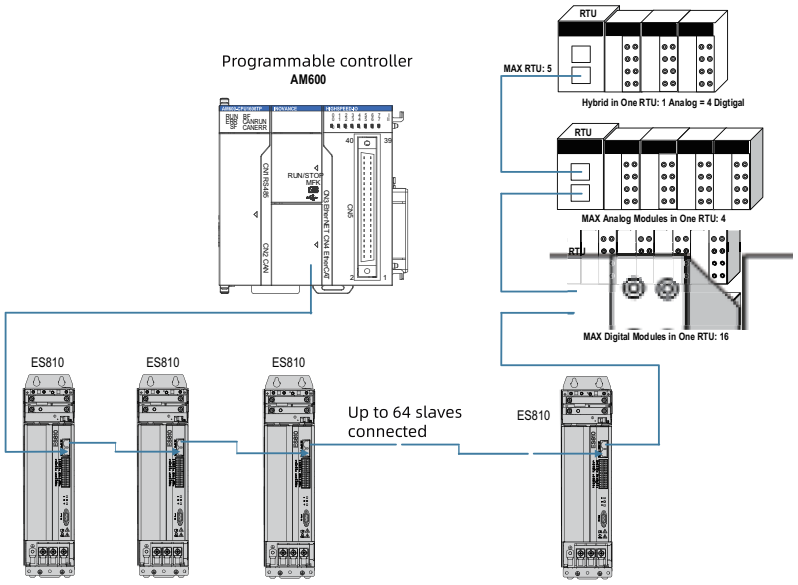

Figure 8-3 EtherCAT networking diagram

8.2.3 Terminal Description

Terminal information

EtherCAT cables are connected to the network ports (IN and OUT) equipped with the metal shield. The electric characteristics are compliant with IEEE 802.3 and ISO 8877 standards.

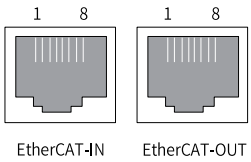

Pin	Definition	Description
1	TX+	Data transmission+
2	TX-	Data transmission-
3	RX+	Data receiving+
4	NULL	Not connected
5	NULL	Not connected
6	RX-	Data receiving-
7	NULL	Not connected
8	NULL	Not connected

Note

Note that the input (EtherCAT-IN) and output (EtherCAT-OUT) terminals cannot be connected inversely. The Cat 5e shielded twisted pair (STP) network cable must be used to ensure stability.

Topology

The communication topology of EtherCAT is flexible without any limit, as shown in the following figures. This drive carries IN and OUT ports.

Linear connection:

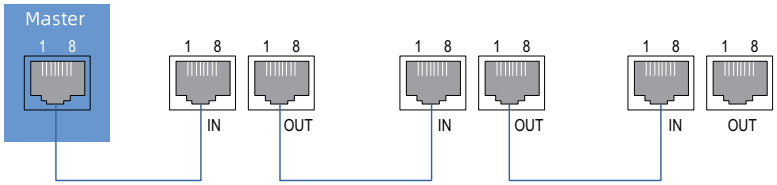

Redundancy ring topology:

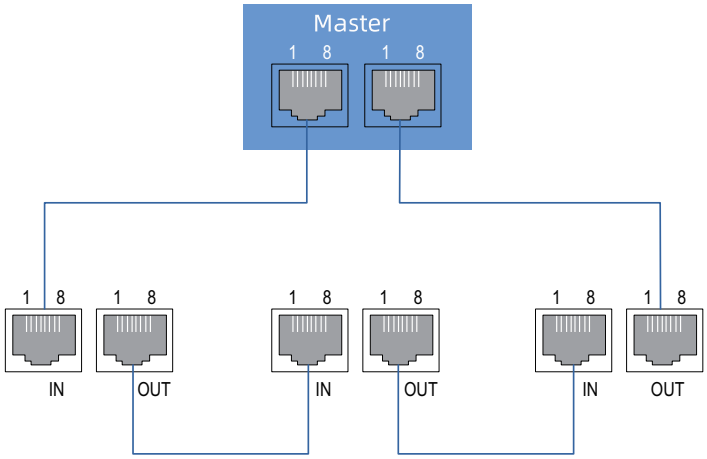

Communication cable

Ethernet Category 5 (100BASE-TX) network cable or high-strength shielded network cable is used as the EtherCAT communication cable, with length shorter than 100 m. The shielded network cable can enhance the anti-interference capacity of the system.

EMC standards

The servo drive complies with the following standards: IEC/EN61800-3:2004 (Adjustable speed electrical power drive systems–part 3: EMC requirements and specific test methods) and GB/t 12668.3.

8.2.4 Communication Performance

Transmission rate	Transmission rate: 2 x 100 Mbit/s (high-speed Ethernet, full duplex mode)
Synchronization	The synchronization jitter is lower than 1 μs when the cable length is 120 m and the number of nodes between two devices is 300.
Refresh time	• 256 digital I/Os: 11 μs • 1000 digital I/Os distributed in 100 nodes: 30 μs = 0.03 ms • 200 analog I/Os (16-bit): 50 μs, sampling rate: 20 kHz • 100 servo axes (8-byte IN+8-byte OUT for each): 100 μs = 0.1 ms • 12000 digital I/Os: 350 μs

8.2.5 Related Parameter Setting

To enable ES810 to access the EtherCAT fieldbus network, set the related parameters properly.

Object dictionary index	Object dictionary sub-index	Name	Value range	Default value
2002	01h	Control mode selection	• 0: Speed control mode • 1: Position control mode • 2: Torque control mode • 3: Speed control mode - torque control mode • 4: Position control mode - speed control mode • 5: Position control mode - torque control mode • 6: Compound mode (position control - speed control - torque control) • 7: Absolute position system mode • 8: CANopen mode • 9: EtherCAT mode	9
200C	0Dh	Update parameters values written through communication to EEPROM	• 1: Disabled • 2: Save 2XXXh parameters • 3: Save 6XXXh parameters • 4: Save all parameters	3

Note

Before saving parameters to EEPROM, set 200C-0Dh to a proper value. Otherwise, these parameters restore to the default settings at next power-on.

8.2.6 EtherCAT Communication Basis

EtherCAT communication specifications

Item		Specification
Communication protocol		IEC 61158 Type 12, IEC 61800-7 CiA402 Drive Profile
Application layer	SDO	SDO request, SDO response
	PDO	Variable PDO mapping
	CiA 402	• Profile position mode (PP) • Profile velocity mode (PV) • Profile torque mode (PT) • Homing (HM) mode • Cyclic synchronous position (CSP) mode • Cyclic synchronous velocity (CSV) mode • Cyclic synchronous torque (CST) mode
Physical layer	Transmission protocol	100BASE-TX (IEEE802.3)
	Maximum distance	100 m
	Interface	RJ45 x 2 (IN, OUT)

Communication structure

Multiple application-layer protocols are available for EtherCAT communication. For the ES810 series rectifier and inverter units, the IEC 61800-7 (CiA402) CANopen motion control profile is adopted.

The following figure shows the EtherCAT communication structure at CANopen application layer.

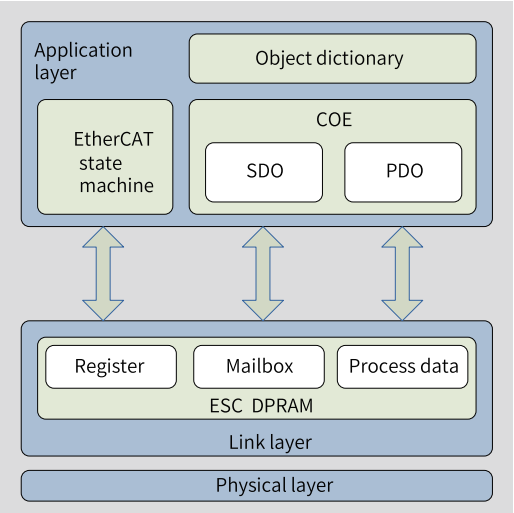

The object dictionary in the application layer contains parameters and application data as well as information on the PDO mapping. The PDO process data object, which contains real-time data during the operation of the product, periodically performs read and write operations. SDO mailbox communication enables acyclic access and modification of communication parameter objects and PDOs.

State machine

The following figure shows the state transition diagram of the EtherCAT state machine.

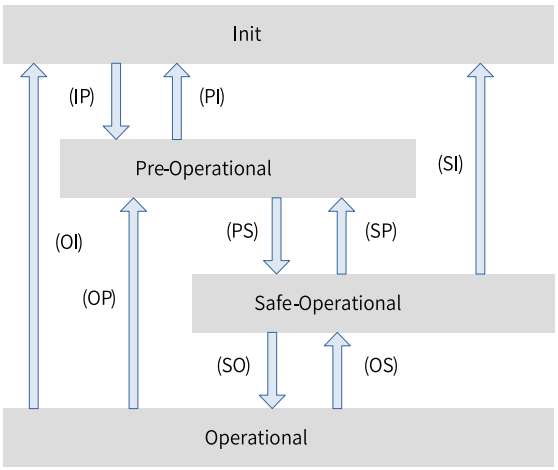

Figure 8-4 EtherCAT state machine

The EtherCAT device must support four states to coordinate state interactions between master and slave application programs during initialization and operation.

- Init: Initialization, abbreviated as I
- Pre-Operational: Abbreviated as P

- Safe-Operational: Abbreviated as S
- Operational: Abbreviated as O

Transition from Init state to Operational state must be in the following sequence: Init→Pre-Operational→Safe-Operational→Operational. In transition from the Operational state to the Init state, certain steps can be skipped. The following table lists the state transition and the initialization process.

State and transition	Operation
Init (I)	No communication is available in the application layer, and the master can only read and write the EtherCASt slave controller (ESC) register.
IP	• The master configures the slave addresses. • Configure the mailbox. • Configure the distributed clock. • Request for "Pre-Operational" state.
Pre-Operational (P)	Service Data Object (SDO) in the application layer
PS	• The master initializes PDO mapping through mailbox communication. • The master configures the Sync Manager channel used during process data communication. • The master configures the FMMU. • The master requests the Safe-Operational state.
Safe-Operational (S)	Process data communication is available. However, the system allows only input data reading, and does not generate output signals (SDO, TPDO).
SO	• The master sends valid output data. • Request for the "Operational state".
Operational (O)	• Both the input and output are active. • Mailbox communication (SDO, TPDO, and RPDO) is still available.

Process data object

PDO data is transmitted in the producer-consumer model. PDOs can be divided into RPDOs (Receive PDO) and TPDOs (Transmit PDO). The slave receives the master's commands through RPDO and feeds back its own status through TPDO.

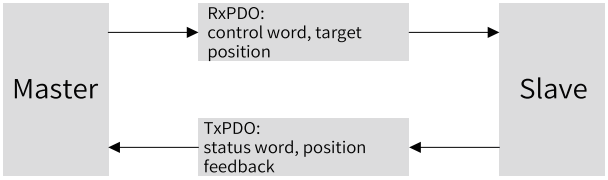

PDO mapping parameters

The PDO mapping indicates the mapping relationship between the object dictionary and PDO. 1600h to 17FFh are RPDOs, and 1A00h to 1BFFh are TPDOs. The ES810 series drive provides six RPDOs and five TPDOs, as listed in the following table.

RPDO (six)	1600h	Variable mapping
	1701h-1705h	Fixed mapping
TPDO (five)	1A00h	Variable mapping
	1B01h-0x1B04h	Fixed mapping

- Fixed PDO mapping

The ES810 provides five fixed RPDOs and four fixed TPDOs. The following table lists typical applications of some RPDOs and TPDOs.

Supported operation mode	PP/CSP
1701h (RPDO258)	Mapping objects (3 mapping objects, 8 bytes)
	• 6040h (Control word) • 607Ah (Target position)
1B01h (TPDO258)	Mapped objects (8 objects, 24 bytes)
	• 603Fh (Error code) • 6041h (Status word) • 6064h (Position actual value) • 6077h (Torque actual value) • 60F4 (Following error actual value) • 60FD (DI state)

Supported operation mode	PP, PV, PT, CSP, CSV, and CST
1702h (RPDO259)	Mapped objects (7 objects, 19 bytes)
	• 6040h (Control word) • 607Ah (Target position) • 60FFh (Target velocity) • 6071h (Target torque) • 6060h (Mode selection) • 607Fh (Max. profile velocity)
1B02h (TPDO259)	Mapped objects (9 objects, 25 bytes)
	• 603Fh (Error code) • 6041h (Status word) • 6064h (Position actual value) • 6077h (Torque actual value) • 6061h (Mode display) • 60FD (DI state)

Supported operation mode	PP, PV, CSP, and CSV
1703h (RPDO260)	Mapped objects (7 objects, 17 bytes)
	• 6040h (Control word) • 607Ah (Target position) • 60FFh (Target velocity) • 6060h (Mode selection) • 60E0h (Positive torque limit value) • 60E1h (Negative torque limit value)
1B03h (TPDO260)	Mapped objects (10 objects, 29 bytes)
	• 603Fh (Error code) • 6041h (Status word) • 6064h (Position actual value) • 6077h (Torque actual value) • 60F4 (Following error actual value) • 6061h (Mode display) • 60FD (DI state)

Supported operation mode	PP, PV, PT, CSP, CSV, and CST
1704h (RPDO261)	Mapped objects (9 objects, 23 bytes)
	• 6040h (Control word) • 607Ah (Target position) • 60FFh (Target velocity) • 6071h (Target torque) • 6060h (Mode selection) • 607Fh (Max. profile velocity) • 60E0h (Positive torque limit value) • 60E1h (Negative torque limit value)
1B02h (TPDO259)	Mapped objects (9 objects, 25 bytes)
	• 603Fh (Error code) • 6041h (Status word) • 6064h (Position actual value) • 6077h (Torque actual value) • 6061h (Mode display) • 60FD (DI state)

Supported operation mode	PP, PV, CSP, and CSV
1705h (RPDO262)	Mapped objects (8 objects, 19 bytes)
	• 6040h (Control word) • 607Ah (Target position) • 60FFh (Target velocity) • 6060h (Mode selection) • 60E0h (Positive torque limit value) • 60E1h (Negative torque limit value) • 60B2h (Torque offset)
1B04h (TPDO261)	Mapped objects (10 objects, 29 bytes)
	• 603Fh (Error code) • 6041h (Status word) • 6064h (Position actual value) • 6077h (Torque actual value) • 6061h (Mode display) • 60F4 (Following error actual value) • 606C (actual speed)

- Variable PDO mapping

  The ES810 provides one variable RPDO and one fixed TPDO.

Variable PDO	Index	Max. number of mapping objects	Maximum bytes	Default mapping object
RPDO1	1600h	10	40	• 6040 (Control word) • 607Ah (Target position)
TPDO1	1A00h	10	40	• 603F (Error code) • 6041h (Status word) • 6064h (Position actual value) • 60FD (DI state)

Sync manager PDO assignment

During EtherCAT cyclic data communication, process data may contain multiple PDO mapping data objects.

The data objects 0x1C10 to 0x1C2F used by the CoE protocol define the PDO mapping object list of the corresponding SM. Multiple PDOs can be mapped to different sub-indexes.

The ES810 series drive supports one RPDO and one TPDO, as described in the following table.

Index	Sub-index	Description
0x1C12	01h	One of 0x1600 and 0x1701 to 0x1705 used as the actual RPDO
0x1C13	01h	One of 0x1A00 and 0x1B01 to 0x1B04 used as the actual TPDO

PDO configuration

PDO mapping parameters include the indicators of process data for PDOs, including indexes, sub-indexes, and the mapping object length. Sub-index 0 indicates the number (N) of mapping objects in the PDO, and the maximum length of each PDO is 4 x N bytes. One or multiple objects can be mapped simultaneously. Sub-indexes 1 to N indicate the mapping content,

The content of mapping parameters is defined as follows.

bit	31	·····	16	15	·····	8	7	·····	0
Definition	Index			Sub-index			Object length		

The index and sub-index together define the position of an object in the object dictionary. The object length indicates the bit length of the object in hexadecimal, as shown below.

Object length	bit length
08h	8-bit
10h	16-bit
20h	32-bit

For example, the mapping parameter of the 16-bit control word 6040h-00 is 60400010h.

Perform the following procedure to configure PDO mapping:

1. The PDO is invalid. Write 0 to sub-index 00h of 1C12h (or 1C13h).

- Clear the original mapping content. All the original mapping content of the PDO is cleared when 0 is written to sub-index 00h of the mapping object.
- Write the PDO mapping content. Write content in sub-indexes 1 to 10 according to the preceding mapping definition.
- Write the total number of PDO mapping objects. Write the number of mapping objects to sub-index 0 of the mapping object.

2. The PDO is valid. Write 1 to sub-index 00h of 1C12h (or 1C13h).

Note

- Configure the PDO only when the EtherCAT state machine is in Pre-operational state ("2" displayed on the operating panel). Otherwise, an error is reported.
- Do not save the PDO configuration parameters in EEPROM. Configure the mapping objects again each time upon power-on. Otherwise, the mapping objects are the default parameters of the drive.
- An SDO fault code is returned when the following operations are performed:
  - Modify PDO parameters in non pre-operational state.
  - Write a value other than 1600/1701 to 1705 in 1C12.
  - Write a value other than 1A00/1B01 to 1B04 in 1C13.

Service data object (SDO)

EtherCAT service data object (SDO) is used to transfer acyclic data, such as communication parameter configuration and drive operation parameter configuration. The EtherCAT CoE service types include:

- Emergency event message
- SDO request
- SDO response
- TxPDO
- RxPDO
- Remote TxPDO transmission request
- Remote RxPDO transmission request
- SDO message

The ES810 series products support:

- SDO request
- SDO response

Distributed clock

The DC enables all EtherCAT devices to use the same system time, therefore controlling synchronous execution of device tasks. A slave generates the synchronization signals according to the synchronized system time. Only DC synchronous mode is supported in the ES810 series rectifier unit and inverter unit. The synchronization cycle is controlled by SYNC0. The cycle range varies with the motion mode.

Status indicators

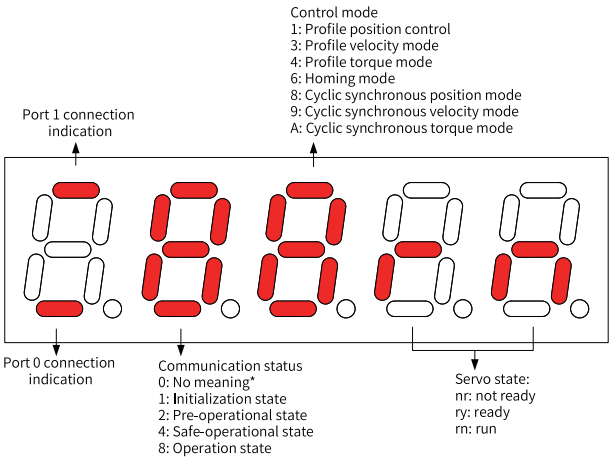

Figure 8-5 Status indicators

Note

If the value 0 is displayed, no value or the value 0 is written to H6060.

Communication connection state

The connection status of the two RJ45 ports is indicated by "-" on the upper and lower part of the leftmost LED. The upper "-" indicates the status of PORT1, and the lower "-" indicates the status of PORT0.

- Steady OFF: No communication connection is detected in the physical layer.
- Steady ON: Communication connection is detected in the physical layer.

Communication status

The 2nd left LED indicates the EtherCAT state machine status of the slave, as described in the following table.

Status of the EtherCAT state machine

Status	SDO	RPDO	TPDO	Description	Panel display
Initialization	No	No	No	Communication initialization	1: Steady ON
Pre-Operational	Yes	No	No	• Network configuration initialization • SDO available	2: Flashing at an interval of 400 ms
Safe-Operational	Yes	No	Yes	SDO, TPDO, and distributed clock mode available	4, Flashing at an interval of 1200 ms (ON for 200ms and OFF for 1000 ms)
Operational	Yes	Yes	Yes	Normal operation state	8: Steady on

Display of operation modes

The communication status and the servo status and the connection status are displayed in the same interface. The 3rd LED indicates the operation mode of the drive in the form of hexadecimal without flashing, as described in the following table.

The operation modes include the following:

Modes of operation display (6060h)	Panel display
1: Profile position mode	1
3: Profile velocity mode	3
4: Profile torque mode	4
6: Homing mode	6
8: Cyclic synchronous position mode	8
9: Cyclic synchronous velocity mode	9

Display of servo status

The 4th and 5th left LEDs indicate the operation status of the slave, as described in the following table.

Servo states include the following.

Status	Description	Panel display
Reset	Initialization	reset 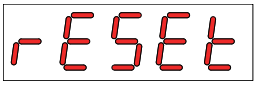
Not ready	Initialization completed and control circuit ON, but main circuit OFF	nr 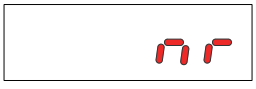

Status	Description	Panel display
Ready	Main circuit ON but servo-ON signal inactive	ry 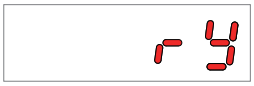 Character "y" flashing at non-zero motor speed When the communication layer is in the pre-operational or safe-operational mode, the flashing frequency is consistent with that of the character "2" or "4". When the communication layer is in the initialization or operational mode, the flashing frequency is 2 Hz.
Operational	Servo-ON signal active and motor energized	rn 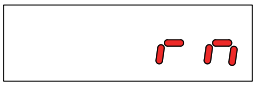 Character "n" flashing at non-zero motor speed When the communication layer is in the pre-operational or safe-operational mode, the flashing frequency is consistent with the flashing frequency of the character "2" or "4". When the communication layer is in the initialization or operation mode, the flashing frequency is 2 Hz.

8.2.7 Introduction To CiA402 Control

To enable the drive to run in the specified status, observe the process stipulated in the CiA 402.

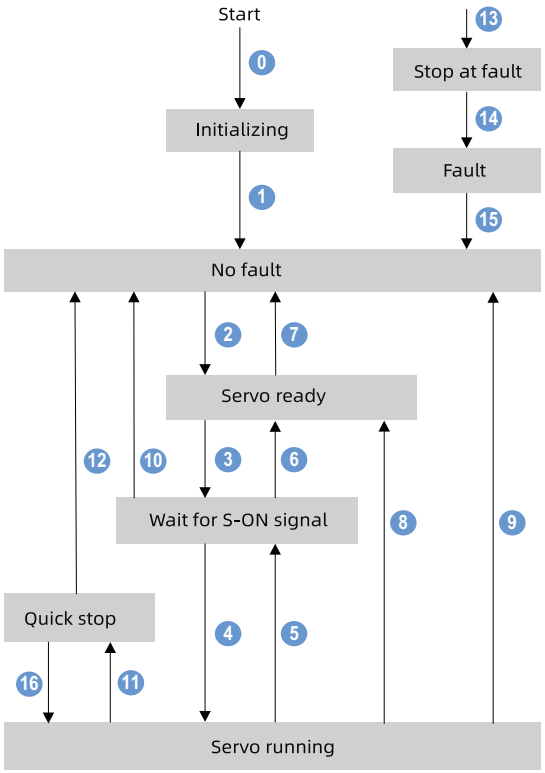

See the following table for descriptions of different states.

Status	Description
Initialization	• Initialization of the drive and internal self-test are done. • Parameters cannot be set, and the driving function cannot be executed.
No fault	• No fault exists in the drive or the fault has been cleared. • Parameter setting of the servo drive is allowed.
Ready to switch on	• The servo drive is ready to run. • Parameter setting of the servo drive is allowed.
Wait for the S-ON signal	• The servo drive is waiting for the S-ON signal. • Parameter setting of the servo drive is allowed.
Operation enabled	• The servo drive is running properly and a certain operation mode is enabled. The motor is energized and starts rotating when the speed reference is not 0. • Only parameters that can be modified during operation can be set.
Quick stop	• Quick stop is activated, and the drive is in the process of quick stop. • Only parameters that can be modified during operation can be set.
Stop at fault	• A fault occurs and the servo drive is in the process of stop. • Only parameters that can be modified during operation can be set.
Fault	The stop process is completed, and all the drive function are inhibited. Parameter setting is allowed for users to eliminate faults.

9 Troubleshooting

9.1 General Safety Instructions

General safety instructions

Danger

- Never perform wiring with power on, and keep all circuit breakers in the OFF state during wiring. Failure to comply may result in electric shock.

Warning

- Ground the drive according to local regulations. Failure to comply can result in the risk of electric shock or fire.
- Do not remove the enclosure or touch the internal circuits when the drive is energized. Failure to comply can result in electric shock.
- Troubleshooting must be performed by professionals. The drive must be inspected, maintained, and repaired by professionals. Failure to comply can result in the risk of electric shock or fire.
- When the drive is installed in an enclosed environment, such as a cabinet or casing box, use a cooling fan or air conditioner to keep the temperature of the inlet air below 50℃. Failure to comply can result in overtemperature or fire.
- Tighten all screws based on the specified tightening torque. Failure to comply may result in electric shock or fire.
- Ensure the input voltage is within the rated voltage range shown on the nameplate. Failure to comply may result in electric shock or a fire.
- Keep combustible and explosive materials away from the equipment.

Caution

- Cover the top of the drive with a piece of cloth or paper during installation to prevent unwanted objects such as metal chippings, oil, and water from falling into the drive. Intrusion of unwanted objects may cause faults.
- Remove the paper or cloth after installation is completed. Otherwise, overtemperature can occur due to poor ventilation.
- Take proper electrostatic discharge (ESD) measures when operating the drive. Failure to comply can result in damage to the internal circuits due to static electricity.

9.2 Rectifier Unit

9.2.1 Fault Display and Solutions

The rectifier unit faults are divided into faults and alarm. The priority of faults is higher than alarms.

1. Example of fault code displayed: E02.00
2. Example of alarm code displayed: A16.13

When a fault occurs during operation, the rectifier unit stops output immediately, the fault indicator TUNE TC flashes in red, and the contact of the fault relay acts. The following table lists the fault types and solutions for specific fault codes. The following information is only for reference. Do not repair or retrofit the device by yourself. If the fault cannot be rectified, contact the agent or Inovance for technical support.

Phase	Solution	Remarks
Upon occurrence of fault	View the operation panel for detailed information of recent three faults, such as fault time, type and frequency, current, bus voltage, DI/DO state, cumulative power-on time and cumulative running time, IGBT temperature, and fault subcode upon occurrence of the faults.	View the information through F9-14 to F9-46. 
Before fault reset	Find and rectify the fault cause according to the fault type displayed on the operating panel.	Rectify the fault according to *"9.2.2 List of Fault Codes" on page 186*.
Fault reset mode	1. Assign function 9 (Fault reset) to the DI by setting any of F4-00 to F4-04 to 9.	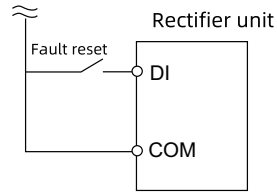
	2. Press the ENTER key on the operation panel to reset the fault.	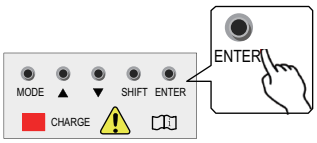
	3. The fault will be reset automatically at next power-on of the rectifier unit. Switch off the main circuit power supply temporarily and perform a power cycle again after the display on the operating panel disappears.	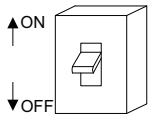
	4. Reset the drive through communication. When F0-02 (Command source) is set to 2 (Communication control), write "7" (Fault reset) to communication address 2000H via the host controller to reset the rectifier unit after the fault is rectified.	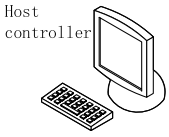

9.2.2 List of Fault Codes

Rectify the fault according to the following table.

Fault name	Panel display	Possible cause	Solution
Input voltage error	E12.01	Input voltage phase R loss	• Check that the three-phase power supply is normal. • Check whether the input cables are broken. • Check whether input terminals are connected properly. • Check the hardware voltage detection circuit.
	E12.02	Input voltage phase S loss	
	E12.03	Input voltage phase T loss	
	E12.04	Input three-phase voltage too high	Adjust the three-phase voltage to a value within the normal range.
	E12.05	Input voltage three-phase unbalance	• Check that the three-phase power supply is normal. • Check the hardware voltage detection circuit.
Module overtempera-ture	E14.00	The ambient temperature is too high.	Lower the ambient temperature.
		The air duct is blocked.	Clean the air duct.
		The fan is damaged.	Replace the fan.
		The thermistor of the module is damaged.	Contact the technical support.
		The module is damaged.	

Fault name	Panel display	Possible cause	Solution
Communication fault	E16.01	Modbus communication timeout	• Check whether the RS485 communication cable is correctly connected. • Check whether the settings of Fd-04 and the PLC communication cycle are proper.
	E16.11	CANopen communication timeout	• Check whether the CAN communication cable is correctly connected. • Check the interference conditions through Fd-15 to Fd-17.
	E16.12	The PDO mapping configured for CANopen is not consistent with the actual communication mapping.	Check the PDO mapping in group AF.
	E16.13	Timeout of inverter in receiving interaction data from rectifier	• Check whether the rectifier unit is in operation. • Check whether the network cable between the rectifier and the inverter is connected. • Check whether the termination resistor is properly connected. • Check whether Fd-12 (CAN baud rate) is correctly set.
	E16.14	Error in receiving interaction data from rectifier by inverter	The rectifier unit is faulty. Rectify the rectifier fault.
	E16.21	CANlink heartbeat timeout	• Check whether the CAN communication cable is correctly connected. • Check the interference conditions through Fd-15 to Fd-17.
	E16.22	CANlink station No. conflict	Modify the repetitive CAN station No. through Fd-13.
	E16.31	PROFIBUS-DP communication timeout (dedicated for PROFIBUS DP-to-CANopen bridge mode)	Check whether the PROFIBUS-DP communication cable is connected properly.
	E16.34	Offline CAN slave detected during configuration of the PROFIBUS DP-to-CANopen bridge	• Check whether the value of "The number of devices" in the PLC matches the actual quantity of stations. • Check whether the station numbers of the slaves are correctly set.
	E16.35	Parameters for configuring PROFIBUS DP-to-CANopen bridge set improperly	Check whether the value of "NO.n" for the PLC is consistent with that of AF-66/67 for the device according to the PLC diagnostic message.
	E16.41	PROFIBUS-DP communication timeout	Check whether the PROFIBUS-DP communication cable is correctly connected.
	E16.42	Parameters for configuring DP-to-CANopen bridge set improperly	Check whether the value of "NO. 1" for the PLC is consistent with that of AF-66/67 for the network bridge unit.
	E16.71	PROFINET communication timeout	• Check the wiring of Ethernet. • Increase the PROFINET timeout time.
	E16.72	CANopen slave communication timeout	• Check the wiring. • Check whether the termination resistor is set correctly.

Fault name	Panel display	Possible cause	Solution
Communication fault	E16.74	The configured CANopen slave is missing.	Modify the drive station number or the PLC configuration to ensure consistent configuration.
	E16.75	CANopen mapping data mismatch	Check the process data mapping of parameter configuration. Ensure that the data length in the PLC configuration is consistent with the process data length of the corresponding slave.
	E16.76	Process data of rectifier unit not matching the configuration	Check the process data mapping of parameter configuration. Ensure that the data length in the PLC configuration is consistent with the process data length of the rectifier unit.
	E16.77	Internal serial port communication fault	Ensure Fd-10 is set to 5 and perform a power cycle to see whether the fault can be rectified. If not, contact the agent or Inovance.
	E16.78	Internal SPI communication fault	Ensure Fd-10 is set to 5 and perform a power cycle to see whether the fault can be rectified. If not, contact the agent or Inovance.
The braking unit is faulty.	E61.01	Braking unit short circuit	• Check whether the braking resistor is short-circuited. • Check whether the braking transistor is shoot-through.
	E61.02	Braking unit overcurrent	• Check whether the resistance and power of the braking resistor are too low. • Check for interference. • Check whether an error occurs during hardware circuit detection.
	E61.03	Braking unit overload	Check whether the resistance and power of the braking resistor are too low.
	E61.04	Braking unit overtemperature pre-alarm	• Lower the ambient temperature. • Check whether the cooling fan runs properly. • Clean the air duct. • Check whether the temperature sensor is damaged.
	E61.05	Braking unit overtemperature	

Table 9–1 Solutions to common faults

No.	Fault symptom	Possible cause	Solution
1	There is no display upon power-on.	The drive is not connected to the grid or the grid voltage is too low.	Check the input power supply.
		The switched-mode power supply on the driver board of the rectifier unit is faulty.	Check the bus voltage.
		The control board or the operating panel is faulty.	Contact Inovance for technical support.
		The rectifier module is damaged.	
2	"HC" is displayed upon power-on.	Related components on the control board are damaged.	Contact Inovance for technical support.
		The motor or the motor cable is short-circuited to ground.	
		The Hall sensor is faulty.	
		The grid voltage is excessively low.	
3	"E23.00" is displayed upon power-on.	The motor or the output cable is short-circuited to ground.	Check the insulation status of the motor and the output cable with a megger.
		The rectifier unit is damaged.	Contact Inovance for technical support.
4	The display is normal while power-on. But after running, "HC" is displayed and the rectifier unit stops.	The cooling fan is damaged or does not rotate.	Replace the fan.
		The cable of the external control terminal is short-circuited.	Rectify external short circuit fault.
5	E14.00 (Module overtemperature) is reported frequently.	The carrier frequency is set to a too high value.	Reduce the carrier frequency (F0-15).
		The cooling fan is damaged or the air duct is clogged.	Replace the fan or clean the air duct.
		Components inside the rectifier unit are damaged (thermistor or others).	Contact Inovance for technical support.
6	DI terminals are deactivated.	Parameters are set improperly.	Check and set the parameters in group F4 again.
		The external signal is incorrect.	Re-connect the external signal cable.
		The jumper across OP and +24 V becomes loose.	Re-confirm the jumper across OP and +24 V.
		The control board is faulty.	Contact Inovance for technical support.
7	The rectifier unit detects overcurrent and overvoltage fault frequently.	Motor parameters are set improperly.	Set the motor parameters or perform motor auto-tuning again.
		The acceleration/deceleration time is improper.	Set a proper acceleration/ deceleration time.
		The load fluctuates.	Contact Inovance for technical support.
8	The braking torque of the motor is insufficient when the motor is in the deceleration or decelerate-to-stop state.	The encoder is disconnected, or overvoltage stall protection is enabled.	• Check the encoder wiring in FVC mode (F0-01 = 1). • If the braking resistor is available, set F3-23 (Overvoltage stall selection) to 0 (Inactive) to disable overvoltage stall.

9.3 Inverter Unit

9.3.1 Fault and Alarm Severity Levels

Faults and alarms of the drive are divided into three severity levels: Level 1 > Level 2 > Level 3, as shown below.

- Level 1 (No. 1) non-resettable faults
- Level 2 (No. 2) resettable faults
- Level 3 (No. 3) resettable alarms

"Resettable" means the operating panel stops displaying the fault/alarm once a "Reset signal" is input.

To reset a fault/alarm, use one of the following methods:

- Set 200D-02h to 1 (Fault reset).
- Enable function 2 (FunIN.2: ALM-RST) of the DI.
- Enable the rising edge of control word 0x6040 bit7 on the host controller.

To reset a level 1 or level 2 fault, disable the S-ON signal first and then send a fault reset signal. To reset a level 3 alarm, send a fault reset signal directly.

Related parameter

Param.	Function	Value range	Description	Setting mode	Effective time	Default
200Dh-02h	Fault reset	• 0: Inactive • 1: Active	For resettable faults and alarms, this parameter stops the operating panel from displaying the fault/alarm. After reset, the parameter is set to 0.	At stop	Real time	0

Related function No.

No.	Function	Function	Description
FunIN.2	ALM-RST	Fault/Alarm reset signal	• This DI function is edge-triggered. It is inactive upon continuous high/low level. • The drive may, depending on the alarm type, continue operating after reset. • If this function is assigned to a low-speed DI and the logic is set to "level-triggered", the drive forcibly changes it to "edge-triggered". The active level change must last for more than 3 ms; otherwise, the fault reset function is inactive. • Do not assign this function to a high-speed DI. Otherwise, this function is inactive. • Inactive: Not resetting the fault/alarm • Active: Resetting the fault/alarm

Fault/Alarm code output

The drive can output the current highest-level fault/alarm code.

To implement fault/alarm output, assign FunOUT.12, FunOUT.13, and FunOUT.14 to set three DOs of the drive:

- FunOUT.12: ALMO1 (first bit of the fault/alarm code, abbreviated as AL1)
- FunOUT.13: ALMO2 (second bit of the fault/alarm code, abbreviated as AL2)
- FunOUT.14: ALMO3 (third bit of the fault/alarm code, abbreviated as AL3)

When different faults/alarms occur, the levels of the three DOs change accordingly.

9.3.2 List of Fault Codes

No.	Fault name	Fault display	Fault category	Default stop mode	0E Group Position	603F	203F
1	Access to FPGA by MCU timeout	E.100.0	Level 1 non-resettable fault	0: Coast to stop	0	0x0100	0x01000100
2	Logic configuration fault	E.102.0	Level 1 non-resettable fault	0: Coast to stop	0	0x7500	0x01020102
3	Mismatch between FPGA and MCU models	E.103.0	Level 1 non-resettable fault	0: Coast to stop	0	0x7500	0x01030103
4	FPGA interruption timeout	E.104.0	Level 1 non-resettable fault	0: Coast to stop	0	0x7500	0x01040104
5	Current loop interrupt or soft interrupt timeout	E.104.1	Level 1 non-resettable fault	0: Coast to stop	1	0x7500	0x11040104
6	Non-resettable system parameter error (requiring parameter initialization)	E.105.0	Level 1 non-resettable fault	0: Coast to stop	1	0x6320	0x01050105
7	Write parameter storage fault	E.108.0	Level 1 non-resettable fault	A: Speed +Torque ramp to stop, keeping position lock status after stop	1	0x5530	0x01080108
8	Read parameter storage fault	E.108.1	Level 1 non-resettable fault	A: Speed +Torque ramp to stop, keeping position lock status after stop	1	0x5530	0x11080108
9	Manufacturer parameter error	E.111.0	Level 1 non-resettable fault	0: Coast to stop	2	0x6320	0x01110111
10	Product models mismatch and no corresponding encoder found	E.120.0	Level 1 non-resettable fault	0: Coast to stop	2	0x7122	0x01200120
11	Product models mismatch and no corresponding motor found	E.120.1	Level 1 non-resettable fault	0: Coast to stop	2	0x7122	0x11200120

No.	Fault name	Fault display	Fault category	Default stop mode	0E Group Position	603F	203F
12	Bus encoder motor code error	E.120.2	Level 1 non-resettable fault	0: Coast to stop	2	0x7122	0x21200120
13	Parameter mismatch when a 2nd generation encoder motor is set	E.122.0	Level 1 non-resettable fault	0: Coast to stop	3	0x7122	0x01220122
14	Product model mismatch and no corresponding drive found	E.123.0	Level 1 non-resettable fault	0: Coast to stop	3	0x0123	0x01230123
15	Data check error or no parameter saved in the motor ROM	E.136.0	Level 1 non-resettable fault	0: Coast to stop	3	0x7305	0x01360136
16	Data check error or no parameter saved in the motor ROM	E.136.1	Level 1 non-resettable fault	0: Coast to stop	3	0x7305	0x11360136
17	FPGA system sampling operation timeout	E.208.0	Level 1 non-resettable fault	0: Coast to stop	4	0x0208	0x02080208
18	Timeout caused by failure of MCU to timely update torque reference	E.208.1	Level 1 non-resettable fault	0: Coast to stop	4	0x0208	0x12080208
19	Error caused by encoder communication timeout	E.208.2	Level 1 non-resettable fault	4: Internal dynamic braking stop, keeping dynamic braking status after stop	4	0x0208	0x22080208
20	Error caused by current sampling (7860) timeout	E.208.3	Level 1 non-resettable fault	0: Coast to stop	4	0x0208	0x32080208
21	Error caused by analog/digital conversion timeout	E.208.4	Level 1 non-resettable fault	0: Coast to stop	5	0x0208	0x42080208
22	Output ground fault	E.210.0	Level 1 non-resettable fault	0: Coast to stop	5	0x2330	0x02100210
23	Output ground fault	E.210.1	Level 1 non-resettable fault	0: Coast to stop	5	0x2330	0x12100210
24	Encoder battery failure	E.731.0	Level 1 non-resettable fault	4: Internal dynamic braking stop, keeping dynamic braking status after stop	5	0x7305	0x07312731

No.	Fault name	Fault display	Fault category	Default stop mode	0E Group Position	603F	203F
25	Encoder multi-turn counting error	E.733.0	Level 1 non-resettable fault	4: Internal dynamic braking stop, keeping dynamic braking status after stop	6	0x7305	0x07330733
26	Encoder multi-turn counter overflow	E.735.0	Level 1 non-resettable fault	4: Internal dynamic braking stop, keeping dynamic braking status after stop	6	0x7305	0x07350735
27	Encoder multi-turn counter overflow	E.735.1	Level 1 non-resettable fault	4: Internal dynamic braking stop, keeping dynamic braking status after stop	6	0x7305	0x17350735
28	Encoder Z signal interference fault	E.740.0	Level 1 non-resettable fault	4: Internal dynamic braking stop, keeping dynamic braking status after stop	6	0x7305	0x07400740
29	Encoder AB signal interference fault	E.740.1	Level 1 non-resettable fault	4: Internal dynamic braking stop, keeping dynamic braking status after stop	7	0x7305	0x17400740
30	Encoder Z signal interference fault	E.740.5	Level 1 non-resettable fault	4: Internal dynamic braking stop, keeping dynamic braking status after stop	7	0x7305	0x57400740
31	Encoder Z signal interference fault	E.740.6	Level 1 non-resettable fault	4: Internal dynamic braking stop, keeping dynamic braking status after stop	7	0x7305	0x67400740

No.	Fault name	Fault display	Fault category	Default stop mode	0E Group Position	603F	203F
32	Encoder Z signal interference fault	E.740.7	Level 1 non-resettable fault	4: Internal dynamic braking stop, keeping dynamic braking status after stop	7	0x7305	0x77400740
33	Encoder Z signal interference fault	E.740.8	Level 1 non-resettable fault	A: Speed +Torque ramp to stop, keeping position lock status after stop	8	0x7305	0x87400740
34	Nikon encoder	E.756.0	Level 1 non-resettable fault	4: Internal dynamic braking stop, keeping dynamic braking status after stop	8	0x7305	0x07560756
35	Nikon encoder EEPROM damaged	E.765.2	Level 1 non-resettable fault	4: Internal dynamic braking stop, keeping dynamic braking status after stop	8	0x0765	0x27650765
36	AD sampling fault reported by FPGA	E.835.0	Level 1 non-resettable fault	A: Speed +Torque ramp to stop, keeping position lock status after stop	8	0x5210	0x08350835
37	Encoder parameter error	E.A33.0	Level 1 non-resettable fault	4: Internal dynamic braking stop, keeping dynamic braking status after stop	9	0x7305	0x0A330A33
38	Encoder echo check error	E.A34.0	Level 1 non-resettable fault	4: Internal dynamic braking stop, keeping dynamic braking status after stop	9	0x7305	0x0A340A34

No.	Fault name	Fault display	Fault category	Default stop mode	0E Group Position	603F	203F
39	Z signal disconnected	E.A35.0	Level 1 non-resettable fault	4: Internal dynamic braking stop, keeping dynamic braking status after stop	9	0x7305	0x0A350A35
40	System parameter error	E.101.0	Level 1 resettable fault	0: Coast to stop	9	0x6320	0x01012101
41	Model code identification failed	E.102.1	Level 1 resettable fault	0: Coast to stop	10	0x7500	0x11022102
42	Motor parameter mismatch upon absolute position function	E.122.1	Level 1 resettable fault	0: Coast to stop	10	0x7122	0x11222122
43	DI function assignment fault	E.130.0	Level 1 resettable fault	0: Coast to stop	10	0x6320	0x01302130
44	DO function assignment fault	E.131.0	Level 1 resettable fault	0: Coast to stop	10	0x6320	0x01312131
45	Error in reading or writing EEPROM in ABSENC	E.135.0	Level 1 resettable fault	4: Internal dynamic braking stop, keeping dynamic braking status after stop	11	0x0135	0x01352135
46	Hardware overcurrent fault	E.201.0	Level 1 resettable fault	0: Coast to stop	11	0x2312	0x02012201
47	Hardware overcurrent fault	E.201.1	Level 1 resettable fault	0: Coast to stop	11	0x2312	0x12012201
48	Hardware overcurrent fault	E.201.2	Level 1 resettable fault	0: Coast to stop	11	0x2312	0x22012201
49	Hardware overcurrent fault	E.201.3	Level 1 resettable fault	0: Coast to stop	12	0x2312	0x32012201
50	d-/q-axis current overflow	E.207.0	Level 1 resettable fault	0: Coast to stop	12	0x0207	0x02072207
51	U, V, and W phase wiring error, requiring exchange of any two phases	E.220.0	Level 1 resettable fault	0: Coast to stop	12	0x0220	0x02202220
52	U, V, and W phase loss	E.220.1	Level 1 resettable fault	0: Coast to stop	12	0x0220	0x12202220
53	Runaway alarm upon incorrect wiring of U, V, and W phases	E.234.0	Level 1 resettable fault	4: Internal dynamic braking stop, keeping dynamic braking status after stop	13	0x0234	0x02342234

No.	Fault name	Fault display	Fault category	Default stop mode	0E Group Position	603F	203F
54	DC bus overvoltage	E.400.0	Level 1 resettable fault	4: Internal dynamic braking stop, keeping dynamic braking status after stop	13	0x3210	0x04002400
55	DC bus undervoltage	E.410.0	Level 1 resettable fault	4: Internal dynamic braking stop, keeping dynamic braking status after stop	13	0x3220	0x04102410
56	The motor speed exceeds the maximum speed.	E.500.0	Level 1 resettable fault	4: Internal dynamic braking stop, keeping dynamic braking status after stop	13	0x8400	0x05002500
57	FPGA internal speed measurement overflow	E.501.0	Level 1 resettable fault	4: Internal dynamic braking stop, keeping dynamic braking status after stop	14	0x0501	0x05012501
58	Offline inertia auto-tuning failure	E.600.0	Level 1 resettable fault	0: Coast to stop	14	0x0600	0x06002600
59	Angle auto-tuning failure	E.602.0	Level 1 resettable fault	0: Coast to stop	14	0x0602	0x06022602
60	Encoder interference fault	E.740.2	Level 1 resettable fault	4: Internal dynamic braking stop, keeping dynamic braking status after stop	14	0x7305	0x27402740
61	Single-turn calculation error	E.740.3	Level 1 resettable fault	4: Internal dynamic braking stop, keeping dynamic braking status after stop	15	0x7305	0x37402740
62	Counting increment error	E.740.4	Level 1 resettable fault	4: Internal dynamic braking stop, keeping dynamic braking status after stop	15	0x7305	0x47402740

No.	Fault name	Fault display	Fault category	Default stop mode	0E Group Position	603F	203F
63	Nikon encoder communication fault	E.755.0	Level 1 resettable fault	4: Internal dynamic braking stop, keeping dynamic braking status after stop	15	0x7305	0x07552755
64	Nikon encoder communication fault	E.755.1	Level 1 resettable fault	4: Internal dynamic braking stop, keeping dynamic braking status after stop	15	0x7305	0x17552755
65	Angle auto-tuning timeout	E.800.0	Level 1 resettable fault	0: Coast to stop	16	0x0800	0x08002800
66	Parameter auto-tuning timeout	E.800.1	Level 1 resettable fault	0: Coast to stop	16	0x0800	0x18002800
67	PI auto-tuning timeout	E.800.2	Level 1 resettable fault	0: Coast to stop	16	0x0800	0x28002800
68	Parameter auto-tuning deactivated	E.801.0	Level 1 resettable fault	0: Coast to stop	16	0x0801	0x08012801
69	AD sampling overvoltage fault of DSP	E.834.1	Level 1 resettable fault	A: Speed +Torque ramp to stop, keeping position lock status after stop	17	0x5210	0x18342834
70	AD sampling overvoltage fault of DSP	E.834.2	Level 1 resettable fault	4: Internal dynamic braking stop, keeping dynamic braking status after stop	17	0x5210	0x28342834
71	AD sampling overvoltage fault of DSP	E.834.3	Level 1 resettable fault	4: Internal dynamic braking stop, keeping dynamic braking status after stop	17	0x5210	0x38342834
72	AD zero drift error	E.836.0	Level 1 resettable fault	A: Speed +Torque ramp to stop, keeping position lock status after stop	17	0x0836	0x08362836
73	Excessive encoder position deviation at next power-on	E.901.0	Level 1 resettable fault	0: Coast to stop	18	0x0901	0x09012901

No.	Fault name	Fault display	Fault category	Default stop mode	0E Group Position	603F	203F
74	Motor power cables are disconnected.	E.939.0	Level 1 resettable fault	0: Coast to stop	18	0x3331	0x09392939
75	Excessive speed deviation	E.044.0	Level 2 resettable fault	4: Internal dynamic braking stop, keeping dynamic braking status after stop	18	0x0044	0x00446044
76	Excessive deviation due to torque limit	E.044.1	Level 2 resettable fault	4: Internal dynamic braking stop, keeping dynamic braking status after stop	18	0x0044	0x10446044
77	Pressure sensor disconnected	E.046.0	Level 2 resettable fault	4: Internal dynamic braking stop, keeping dynamic braking status after stop	19	0x0046	0x00466046
78	Inactive S-ON command	E.121.0	Level 2 resettable fault	4: Internal dynamic braking stop, keeping dynamic braking status after stop	19	0x5441	0x01216121
79	STO signal input protection	E.300.0	Level 2 resettable fault	2: External dynamic braking stop, keeping dynamic braking status after stop	19	0x0300	0x03006300
80	Rectifier fault	E.422.0	Level 2 resettable fault	4: Internal dynamic braking stop, keeping dynamic braking status after stop	19	0x0422	0x04226422
81	Rectifier power-down fault	E.423.0	Level 2 resettable fault	4: Internal dynamic braking stop, keeping dynamic braking status after stop	20	0x0423	0x04236423

No.	Fault name	Fault display	Fault category	Default stop mode	0E Group Position	603F	203F
82	Root extraction error	E.466.0	Level 2 resettable fault	4: Internal dynamic braking stop, keeping dynamic braking status after stop	20	0x0466	0x04666466
83	Frequency division pulse output overspeed	E.510.0	Level 2 resettable fault	4: Internal dynamic braking stop, keeping dynamic braking status after stop	20	0x0510	0x05106510
84	Drive overload	E.610.0	Level 2 resettable fault	4: Internal dynamic braking stop, keeping dynamic braking status after stop	20	0x3230	0x06106610
85	Motor overload	E.620.0	Level 2 resettable fault	4: Internal dynamic braking stop, keeping dynamic braking status after stop	21	0x3230	0x06206620
86	Motor overload	E.620.1	Level 2 resettable fault	4: Internal dynamic braking stop, keeping dynamic braking status after stop	21	0x3230	0x16206620
87	Motor stall overtemperature protection	E.630.0	Level 2 resettable fault	4: Internal dynamic braking stop, keeping dynamic braking status after stop	21	0x7121	0x06306630
88	Heatsink temperature excessively high	E.650.0	Level 2 resettable fault	4: Internal dynamic braking stop, keeping dynamic braking status after stop	21	0x4210	0x06506650

No.	Fault name	Fault display	Fault category	Default stop mode	0E Group Position	603F	203F
89	Motor temperature too high (PTC)	E.660.0	Level 2 resettable fault	A: Speed +Torque ramp to stop, keeping position lock status after stop	22	0x0660	0x06606660
90	Excessively high temperature (KTY)	E.660.1	Level 2 resettable fault	A: Speed +Torque ramp to stop, keeping position lock status after stop	22	0x0660	0x16606660
91	Encoder battery alarm	E.730.0	Level 2 resettable fault	4: Internal dynamic braking stop, keeping dynamic braking status after stop	22	0x7305	0x07306730
92	Encoder Tx-end communication check error	E.732.0	Level 2 resettable fault	4: Internal dynamic braking stop, keeping dynamic braking status after stop	22	0x7305	0x07326732
93	Encoder Z signal interference fault	E.745.0	Level 2 resettable fault	4: Internal dynamic braking stop, keeping dynamic braking status after stop	23	0x7305	0x07456745
94	Encoder Z signal interference fault	E.750.2	Level 2 resettable fault	4: Internal dynamic braking stop, keeping dynamic braking status after stop	23	0x0750	0x27506750
95	Encoder Z signal interference fault	E.750.3	Level 2 resettable fault	4: Internal dynamic braking stop, keeping dynamic braking status after stop	23	0x0750	0x37506750

No.	Fault name	Fault display	Fault category	Default stop mode	0E Group Position	603F	203F
96	Encoder Z signal interference fault	E.750.4	Level 2 resettable fault	4: Internal dynamic braking stop, keeping dynamic braking status after stop	23	0x0750	0x47506750
97	Encoder Z signal interference fault	E.750.5	Level 2 resettable fault	4: Internal dynamic braking stop, keeping dynamic braking status after stop	24	0x0750	0x57506750
98	Encoder Z signal interference fault	E.750.6	Level 2 resettable fault	4: Internal dynamic braking stop, keeping dynamic braking status after stop	24	0x0750	0x67506750
99	Encoder overtemperature	E.760.0	Level 2 resettable fault	4: Internal dynamic braking stop, keeping dynamic braking status after stop	24	0x4210	0x07606760
100	Nikon encoder limit violation	E.765.0	Level 2 resettable fault	4: Internal dynamic braking stop, keeping dynamic braking status after stop	24	0x0765	0x07656765
101	Three-phase unbalance	E.940.0	Level 2 resettable fault	0: Coast to stop	25	0x0940	0x09406940
102	Frequent parameter storage alarm	E.942.0	Level 2 resettable fault	4: Internal dynamic braking stop, keeping dynamic braking status after stop	25	0x7600	0x09426942
103	Position reference or position feedback reaching the limit	E.997.0	Level 2 resettable fault	A: Speed +Torque ramp to stop, keeping position lock status after stop	25	0x0997	0x09976997

No.	Fault name	Fault display	Fault category	Default stop mode	0E Group Position	603F	203F
104	Object dictionary data setting error	E.998.0	Level 2 resettable fault	4: Internal dynamic braking stop, keeping dynamic braking status after stop	25	0x6320	0x09986998
105	Resistance auto-tuning failed	E.A42.1	Level 2 resettable fault	0: Coast to stop	26	0x0A42	0x1A426A42
106	Inductance auto-tuning failed	E.A42.2	Level 2 resettable fault	0: Coast to stop	26	0x0A42	0x2A426A42
107	Back EMF auto-tuning failed	E.A42.3	Level 2 resettable fault	0: Coast to stop	26	0x0A42	0x3A426A42
108	Motor parameter auto-tuning failed	E.A42.6	Level 2 resettable fault	0: Coast to stop	26	0x0A42	0x6A426A42
109	Excessive position deviation	E.B00.6	Level 2 resettable fault	A: Speed +Torque ramp to stop, keeping position lock status after stop	27	0x8611	0x6B006B00
110	Position reference input error	E.B01.0	Level 2 resettable fault	A: Speed +Torque ramp to stop, keeping position lock status after stop	27	0x0B01	0x0B016B01
111	Electronic gear ratio setting error	E.B03.0	Level 2 resettable fault	4: Internal dynamic braking stop, keeping dynamic braking status after stop	27	0x6320	0x0B036B03
112	Electronic gear ratio setting error	E.B03.1	Level 2 resettable fault	A: Speed +Torque ramp to stop, keeping position lock status after stop	27	0x6320	0x1B036B03
113	Electronic gear ratio setting error	E.B03.2	Level 2 resettable fault	4: Internal dynamic braking stop, keeping dynamic braking status after stop	28	0x6320	0x2B036B03

No.	Fault name	Fault display	Fault category	Default stop mode	0E Group Position	603F	203F
114	ECT electronic gear ratio set improperly	E.B03.3	Level 2 resettable fault	4: Internal dynamic braking stop, keeping dynamic braking status after stop	28	0x6320	0x3B036B03
115	Switchover (internal/external) not allowed during hybrid use of fully closed-loop and multi-position absolute modes	E.B04.0	Level 2 resettable fault	4: Internal dynamic braking stop, keeping dynamic braking status after stop	28	0x6320	0x0B046B04
116	Mold protection parameter read error	E.B05.0	Level 2 resettable fault	A: Speed +Torque ramp to stop, keeping position lock status after stop	28	0x0B05	0x0B056B05
117	Reset after saving the mold protection parameters	E.B06.0	Level 2 resettable fault	A: Speed +Torque ramp to stop, keeping position lock status after stop	29	0x0B06	0x0B066B06
118	Number of points to be sampled higher than the maximum number of points 8 x 1024	E.B07.0	Level 2 resettable fault	A: Speed +Torque ramp to stop, keeping position lock status after stop	29	0x0B07	0x0B076B07
119	Mold protection triggered	E.B08.0	Level 2 resettable fault	A: Speed +Torque ramp to stop, keeping position lock status after stop	29	0x0B08	0x0B086B08
120	Communication interrupted	E.D03.0	Level 2 resettable fault	A: Speed +Torque ramp to stop, keeping position lock status after stop	29	0x0D03	0x0D036D03

No.	Fault name	Fault display	Fault category	Default stop mode	0E Group Position	603F	203F
121	CANopen communication timeout	E.D04.0	Level 2 resettable fault	A: Speed +Torque ramp to stop, keeping position lock status after stop	30	0x0D04	0x0D046D04
122	CANopen communication initialized	E.D05.0	Level 2 resettable fault	A: Speed +Torque ramp to stop, keeping position lock status after stop	30	0x8160	0x0D056D05
123	CANopen communication reset	E.D06.0	Level 2 resettable fault	A: Speed +Torque ramp to stop, keeping position lock status after stop	30	0x8170	0x0D066D06
124	Bus-off error	E.D07.0	Level 2 resettable fault	A: Speed +Torque ramp to stop, keeping position lock status after stop	30	0x0D07	0x0D076D07
125	Bus PDO transmission length error	E.D08.0	Level 2 resettable fault	A: Speed +Torque ramp to stop, keeping position lock status after stop	31	0x0D08	0x0D086D08
126	Lower limit of software position higher than the upper limit	E.D09.0	Level 2 resettable fault	A: Speed +Torque ramp to stop, keeping position lock status after stop	31	0x6320	0x0D096D09
127	Home offset outside the software position limit	E.D10.0	Level 2 resettable fault	A: Speed +Torque ramp to stop, keeping position lock status after stop	31	0x6320	0x0D106D10

No.	Fault name	Fault display	Fault category	Default stop mode	0E Group Position	603F	203F
128	Synchronization frame error exceeds 1/4 of the synchronization cycle.	E.D11.0	Level 2 resettable fault	A: Speed +Torque ramp to stop, keeping position lock status after stop	31	0x6320	0x0D116D11
129	Rectifier CAN information lost	E.D12.0	Level 2 resettable fault	A: Speed +Torque ramp to stop, keeping position lock status after stop	32	0x0D12	0x0D126D12
130	Bus disconnected	E.E01.0	Level 2 resettable fault	A: Speed +Torque ramp to stop, keeping position lock status after stop	32	0x0E01	0x0E016E01
131	Bus off	E.E02.0	Level 2 resettable fault	A: Speed +Torque ramp to stop, keeping position lock status after stop	32	0x0E02	0x0E026E02
132	Bus connection timeout	E.E03.0	Level 2 resettable fault	A: Speed +Torque ramp to stop, keeping position lock status after stop	32	0x0E03	0x0E036E03
133	Internal communication of the expansion card timeout	E.E04.0	Level 2 resettable fault	A: Speed +Torque ramp to stop, keeping position lock status after stop	33	0x0E04	0x0E046E04
134	Station No. conflict	E.E05.0	Level 2 resettable fault	A: Speed +Torque ramp to stop, keeping position lock status after stop	33	0x0E05	0x0E056E05

No.	Fault name	Fault display	Fault category	Default stop mode	0E Group Position	603F	203F
135	Station No. setting error	E.E06.0	Level 2 resettable fault	A: Speed +Torque ramp to stop, keeping position lock status after stop	33	0x0E06	0x0E066E06
136	Communication state machine error	E.E07.6	Level 2 resettable fault	A: Speed +Torque ramp to stop, keeping position lock status after stop	33	0x0E07	0x6E076E07
137	Synchronization loss	E.E08.0	Level 2 resettable fault	4: Internal dynamic braking stop, keeping dynamic braking status after stop	34	0x0E08	0x0E086E08
138	System parameter error	E.E09.0	Level 2 resettable fault	A: Speed +Torque ramp to stop, keeping position lock status after stop	34	0x0E09	0x0E096E09
139	Configuration error	E.E0A.0	Level 2 resettable fault	A: Speed +Torque ramp to stop, keeping position lock status after stop	34	0x0E0A	0x0E0A6E0A
140	ESI configuration file not programmed	E.E11.6	Level 2 resettable fault	4: Internal dynamic braking stop, keeping dynamic braking status after stop	34	0x0E11	0x6E116E11
141	ECAT initialization failure	E.E12.0	Level 2 resettable fault	A: Speed +Torque ramp to stop, keeping position lock status after stop	35	0x0E12	0x0E126E12

No.	Fault name	Fault display	Fault category	Default stop mode	0E Group Position	603F	203F
142	ECAT synchronization cycle not a multiple of the PWM cycle	E.E13.0	Level 2 resettable fault	A: Speed +Torque ramp to stop, keeping position lock status after stop	35	0x0E13	0x0E136E13
143	Excessive deviation of the ECAT synchronization signal	E.E15.0	Level 2 resettable fault	A: Speed +Torque ramp to stop, keeping position lock status after stop	35	0x0E15	0x0E156E15
144	Master and slave synchronous reception failed	E.E20.1	Level 2 resettable fault	A: Speed +Torque ramp to stop, keeping position lock status after stop	35	0x0E20	0x1E206E20
145	Master and slave synchronous transmission failure	E.E20.2	Level 2 resettable fault	A: Speed +Torque ramp to stop, keeping position lock status after stop	36	0x0E20	0x2E206E20
146	Excessive synchronous transmission delay of master and slave	E.E20.3	Level 2 resettable fault	A: Speed +Torque ramp to stop, keeping position lock status after stop	36	0x0E20	0x3E206E20
147	Excessive position deviation during master-slave synchronization	E.E20.4	Level 2 resettable fault	A: Speed +Torque ramp to stop, keeping position lock status after stop	36	0x0E20	0x4E206E20
148	Excessive torque deviation during master-slave synchronization	E.E20.5	Level 2 resettable fault	4: Internal dynamic braking stop, keeping dynamic braking status after stop	36	0x0E20	0x5E206E20

No.	Fault name	Fault display	Fault category	Default stop mode	0E Group Position	603F	203F
149	Master and slave axes faulty	E.E20.6	Level 1 resettable fault	A: Speed +Torque ramp to stop, keeping position lock status after stop	37	0x0E20	0x6E202E20
150	False home	E.E20.7	Level 2 resettable fault	A: Speed +Torque ramp to stop, keeping position lock status after stop	37	0x0E20	0x7E206E20
151	Injection axis limit alarm	E.B09.0	Level 2 resettable fault	A: Speed +Torque ramp to stop, keeping position lock status after stop	37	0x0B09	0x0B096B09
152	Process parameter setting error	E.B10.0	Level 2 resettable fault	A: Speed +Torque ramp to stop, keeping position lock status after stop	37	0x0B10	0x0B106B10
153	Associated fault trip under parallel screw torque synchronization mode	E.E21.0	Level 2 resettable fault	4: Internal dynamic braking stop, keeping dynamic braking status after stop	38	0x0E21	0x0E216E21
154	STO signal input protection - Used when 03-37 = 2	E.300.1	Level 2 resettable fault	2: External dynamic braking stop, keeping dynamic braking status after stop	38	0x0300	0x13006300
155	Brake error	E.310.0	Level 2 resettable fault	A: Speed +Torque ramp to stop, keeping position lock status after stop	38	0x0310	0x03106310

No.	Fault name	Fault display	Fault category	Default stop mode	0E Group Position	603F	203F
156	ESI check failed (XML_FLASH checksum failed): regarded as empty	E.E11.0	Level 2 resettable fault	A: Speed +Torque ramp to stop, keeping position lock status after stop	38	0x0E11	0x0E116E11
157	XML EEPROM read-write failure	E.E11.1	Level 2 resettable fault	A: Speed +Torque ramp to stop, keeping position lock status after stop	39	0x0E11	0x1E116E11
158	Pressure sensor disconnected (voltage too low)	E.046.1	Level 2 resettable fault	4: Internal dynamic braking stop, keeping dynamic braking status after stop	39	0x0046	0x10466046
159	Braking unit DI loss	E.311.1	Level 2 resettable fault	A: Speed +Torque ramp to stop, keeping position lock status after stop	39	0x0311	0x13116311
160	Synchronous quick stop of master and slave	E.E25.0	Level 2 resettable fault	A: Speed +Torque ramp to stop, keeping position lock status after stop	39	0x0E25	0x0E256E25
161	Forward overtravel fault	E.010.0	Level 2 resettable fault	4: Internal dynamic braking stop, keeping dynamic braking status after stop	40	0x0010	0x00106010

No.	Fault name	Fault display	Fault category	Default stop mode	0E Group Position	603F	203F
162	Reverse overtravel fault	E.010.1	Level 2 resettable fault	4: Internal dynamic braking stop, keeping dynamic braking status after stop	40	0x0010	0x10106010
163	Positive/Negative limit setting error	E.010.2	Level 2 resettable fault	4: Internal dynamic braking stop, keeping dynamic braking status after stop	40	0x0010	0x20106010

The above faults can be set to different stop modes according to parameters in group 0E. One parameter can be used to set four stop modes. Stop modes are as follows:

- 0: Coast to stop
- 1: External dynamic braking stop, keeping de-energized status after stop
- 2: External dynamic braking stop, keeping dynamic braking status after stop
- 3: Internal dynamic braking stop, keeping de-energized status after stop
- 4: Internal dynamic braking stop, keeping dynamic braking status after stop
- 5: Stop at zero speed, keeping de-energized status after stop
- 6: Stop at zero speed, keeping position lock status after stop
- 7: Ramp to stop, keeping the de-energized status after stop
- 8: Ramp to stop, keeping the de-energized status after stop
- 9: Speed+Torque ramp to stop, keeping de-energized status after stop
- A: Speed+Torque ramp to stop, keeping position lock status after stop

9.3.3 List of Alarm Codes

Alarm code	Name	603F	203F
A.120.3	Rated current of motor higher than that of the drive	0x7122	0x3120E120
A.110.0	Frequency-division pulse output setting error	0x6320	0x0110E110
A.601.0	Homing timeout error	0x0601	0x0601E601
A.831.0	AI zero offset excessively high	0x5210	0x0831E831
A.900.0	Emergency stop alarm	0x5442	0x0900E900
A.941.0	Parameters changed can be activated at next power-on only	0x6320	0x0941E941
A.950.0	Forward overtravel alarm	0x5443	0x0950E950
A.952.0	Reverse overtravel alarm	0x5444	0x0952E952
A.A40.0	Parameter auto-tuning failed	0x0A40	0x0A40EA40
A.A40.1	Parameter auto-tuning failed (H0806 = 2)	0x0A40	0x1A40EA40
A.A40.2	Parameter auto-tuning failed (sampling error)	0x0A40	0x2A40EA40

Alarm code	Name	603F	203F
A.A40.3	Parameter auto-tuning failed (rising time check error)	0x0A40	0x3A40EA40
A.A40.4	Parameter auto-tuning failed (overshoot check error)	0x0A40	0x4A40EA40
A.A40.5	Parameter auto-tuning failed (q-axis current steady-state error check function)	0x0A40	0x5A40EA40
A.A40.6	Parameter auto-tuning failed (q-axis current steady-state error check function)	0x0A40	0x6A40EA40
A.765.1	Nikon encoder EEPROM busy	0x0765	0x1765E765
A.980.0	Encoder algorithm error alarm	0x7305	0x0980E980
A.E20.0	Synchronous parameter inconsistent	0x0E20	0x0E20EE20
A.B10.1	Process mode not matching control word	0x0B10	0x1B10EB10
A.611.0	Drive overload alarm	0x0611	0x0611E611
A.621.0	Motor overload alarm 1	0x0621	0x0621E621
A.622.0	Motor overload alarm 2	0x0622	0x0622E622
A.631.0	Motor stall overtemperature protection alarm	0x0631	0x0631E631
A.E22.8	Alarm for dual-screw leveling not done	0x0E22	0x8E22EE22
A.301.1	STO signal input protection (used when 03-37 = 3)	0x0301	0x1301E301

9.3.4 SDO Transfer Abort Codes

Abort code	Function	Abort code	Function
0503 0000	Trigger bits not alternated	0607 0012	Incorrect data type: service parameter too long
0504 0000	SDO protocol timed out.	0607 0013	Incorrect data type: service parameter too short
0504 0001	Invalid or unknown client/server command word	0609 0011	Sub-index not exist
0504 0005	Memory overflow	0609 0030	Invalid parameter value
0601 0000	Inaccessible object	0609 0031	Excessively high value written
0601 0001	Attempt to read a write-only object	0609 0032	Excessively low value written
0601 0002	Attempt to write a read-only object	0609 0036	Maximum value lower than minimum value
0602 0000	Object not exist in the object dictionary	0800 0000	General error
0604 0041	Object cannot be mapped to the PDO	0800 0020	Data cannot be transmitted or saved to the application
0604 0042	Number and length of mapped objects exceeds PDO length	0800 0021	Failed to transmit or save data to the application due to local control
0604 0043	General parameter incompatibility	0800 0022	Failed to transmit or save data to the application due to the device state
0604 0047	General internal incompatibility	0800 0023	Dynamic error in object dictionary or object dictionary not exist
0606 0000	Failed to access objects due to hardware errors	0800 0024	Value not exist
0607 0010	Incorrect data type: incorrect service parameter length	-	-

9.3.5 Solutions To Faults

E.044.x : Excessive speed deviation

Cause:

The deviation between the speed feedback and speed reference is excessive.

Fault code	Cause	Verification method	Solution
E.044.0	The load is excessive.	Check whether the current output reaches the limit through the software.	Increase the torque limit, or replace with a drive of higher power rating.
E.044.1	Torque limited	Check whether the torque is limited to a value below 120%.	Increase the torque limit.

E.046.x: Pressure sensor open circuit

Cause:

The drive output current is greater than a certain threshold; however, the pressure sensor feedback cannot be detected.

Fault code	Cause	Verification method	Solution
E.046.0	The pressure sensor is wired incorrectly.	Check whether the pressure sensor is wired correctly.	Wire cables correctly.
	AI3 sampling error	Use a multimeter to detect the feedback voltage of the pressure sensor and compare it with the sampling value in H0B-23.	Replace the drive.

E.101.x: Internal parameter error

Cause:

The total number of parameters changes, which generally occurs after software update. Values of parameters in groups 2002 and above exceed the limit, which generally occurs after software update.

Fault code	Cause	Verification method	Solution
E.101.0	The voltage of the control circuit power supply drops instantaneously.	Measure whether the input voltage of the control circuit cable on the non-drive side is within the following range: Bus voltage: 537 VDC to 679 VDC	Increase the power capacity or replace with a power supply of higher capacity. Restore the default setting (2002-20h = 1), and write the parameters again.
	Instantaneous power failure occurs during saving parameters.	Check whether instantaneous power failure occurs when saving parameters.	Hold the MODE key down for 3s for an automatic reset. Restore system parameters to default values by setting 2002-20h to 1 and rewrite parameters.
	The software is updated.	Check whether the software is updated.	Set the drive model and motor model again, and restore the default setting (2002-20h = 1).
	The drive is faulty.	If the fault persists after repeated power cycling and parameter initialization, the inverter unit is faulty.	Replace the drive.
E.101.1	The number of write operations within a certain period of time exceeds the limit.	Check whether parameters are updated frequently through the host controller.	Change the parameter writing method and write the parameters again. If the drive is faulty, replace it.

E.102.x: Programmable logic configuration fault

Cause:

The multi-core logical configuration is faulty, the shared RAM verification is faulty, or the software version of each core does not match.

Fault code	Cause	Verification method	Solution
E.102.0	The FPGA does not match each version of the CPU core software.	View the FPGA software version (2001-03h), CPU0 software version (2001-04h), and CPU1 software version (2001-05h) through the operating panel or software tool. Check whether the non-zero values of the most significant bit of the software versions are consistent.	Contact Inovance for technical support. Update the FPGA or CPU software to make them match.
	The FPGA is faulty.	The fault persists after repeated power cycling.	Replace the drive.
E.102.1	Model code identification failed	The fault persists after repeated power cycling.	Replace the drive.

E.103.x: FPGA software version too early

Cause:

The FPGA version (2001-02h) is earlier than 0112.0, and the MCU software version (2001-01h) is 0101.7 or later.

Fault code	Cause	Verification method	Solution
E.103.0	The FPGA version in 2001-02h is earlier than 0112.0.	View the MCU software version (2001-01h) and the FPGA software version (2001-02h) via the operating panel or software tool.	Update the FPGA or MCU software to make them match.
	The FPGA is faulty.	The fault persists after repeated power cycling.	Replace the drive.

E.104.x: Programmable logic interruption

The drive displays different internal fault codes under the same fault code. To distinguish fault causes, you can view these internal fault codes in 200B-2Eh.

Cause:

Access timeout between CPU or FPGA interrupts/Runtime timeout for current loop interrupt or software interrupt

Fault code	Cause	Verification method	Solution
E.104.0	The FPGA is faulty.	The fault persists after repeated power cycling.	Replace the drive.
	The communication handshake between FPGA and MCU is abnormal.		
E.104.1	Current loop interrupt or soft interrupt timeout		

E.105.x: Internal program error

Cause:

The total number of parameters read/written from the EEPROM is abnormal. The range of parameter values is abnormal (which generally occurs after program update).

Fault code	Cause	Verification method	Solution
E.105.0	EEPROM fault	Check the causes according to the method of E.101.0.	Restore system parameters to default values by setting 2002-20h to 1, and hold the MODE key down for 3s for an automatic reset.
	The drive is faulty.	The fault persists after repeated power cycling.	Replace the drive.

E.108.x: Parameter storage fault

Cause:

The attempt to write parameter values to EEPROM or read parameter values from EEPROM failed.

Fault code	Cause	Verification method	Solution
E.108.0	A fault occurs when writing parameters.	Modify a certain parameter, power cycle the drive, and check whether the modified value is saved.	If the modified value is not saved and the fault persists after repeated power cycling, replace the drive.
E.108.1	A fault occurs when reading parameters.		

E.120.x: Product match fault

Cause:

The motor model and the drive model do not match or parameter settings are incorrect.

Fault code	Cause	Verification method	Solution
E.120.0	Product models mismatch and no corresponding encoder is found.	See whether this model exists according to *"2.1.1 Rectifier Unit" on page 17* and *"2.1.2 Inverter Unit" on page 18*.	If the model does not exist, set the model correctly based on the nameplate according to *"2.1.1 Rectifier Unit" on page 17* and *"2.1.2 Inverter Unit" on page 18*.
E.120.1	Product models mismatch and no corresponding motor is found.	View the motor nameplate to check whether the motor is suitable. Check whether 2000-01h is set properly.	Set 2000-01h (Motor code) correctly according to the motor nameplate or replace with a matching motor.
E.120.2	Bus encoder motor code error		
A.120.3	The power rating of the motor does not match that of the drive.		

E.121.x: Inactive S-ON command

Cause:

A redundant S-ON signal is sent when some auxiliary functions are used.

Fault code	Cause	Verification method	Solution
E.121.0	The S-ON signal is activated through communication when the drive is already enabled internally.	Check whether an S-ON signal is sent from the host controller when auxiliary functions (200D-03h, 200D-04h, 200D-0Ch) are used.	Switch off the S-ON signal sent from the host controller.

E.130.x: Different DIs assigned with the same function

Cause:

The same DI function is assigned repeatedly, including hardware DI and virtual DI. The DI function number exceeds the number of DI functions. The DI function is not supported.

Fault code	Cause	Verification method	Solution
E.130.0	The same function is assigned to different DIs.	View 2003-03h, 2003-05h, 2003-07h to 2003-31h to check whether they are assigned with the same non-zero DI function No..	Re-assign different DI function numbers to the parameters assigned with the same non-zero function No.. Then restart the control circuit to activate the re-assignment, or switch off the S-ON signal and send a RESET signal to activate the re-assignment.
	The DI function No. exceeds the maximum setting number allowed for DI functions.	Check whether the MCU program is updated.	Restore system parameters to default values by setting 2002-20h to 1, and hold the MODE key down for 3s for an automatic reset.
	The DI function is not supported.	Check whether the DI function set by parameters in groups 2003h and 2017h is supported.	Do not set a DI function No. not included in the DI/DO function definition table.

E.131.x: DO function No. exceeding the number of DO functions

Cause:

The DO function No. exceeds the number of DO functions.

Fault code	Cause	Verification method	Solution
E.131.0	The DO function No. exceeds the maximum setting number allowed for DO functions.	Check whether the MCU program is updated.	Restore system parameters to default values by setting 2002-20h to 1, and hold the MODE key down for 3s for an automatic reset.

E.136.x: Data check error or no parameter saved in the motor ROM

Cause:

When reading parameters from the encoder ROM, the drive detects that no parameters are saved or parameter values are inconsistent with the agreed values.

Fault code	Cause	Verification method	Solution
E.136.0 E.136.1	The drive and motor do not match.	Check whether ES810 series servo drive and servo motor are used.	Replace with the mutually-matching drive and motor.
	A parameter check error occurs, or no parameter is saved in the ROM of the bus incremental encoder.	Check whether the encoder cable provided is used. The cable must be connected securely without scratching, breaking or poor contact on both ends. Measure signals PS+, PS-, +5V and GND at both ends of the encoder cable and observe whether signals at both ends are consistent. For signal assignment, see Chapter "Wiring" in the hardware guide.	Use the encoder cable provided. Ensure motor terminals and servo drive screws are connected securely. Use a new encoder cable if necessary. Route encoder cables and power cables (U/V/W) through different routes.
	The encoder cable is connected improperly.	Check the encoder cable connection. Check whether ambient vibration is excessive, which loosens the encoder cable and even damages the encoder.	Connect the cables again according to the correct wiring diagram and ensure encoder terminals are connected securely.
	The drive is faulty.	Hold the MODE key down for 3s to reset the fault. Check whether the fault persists.	If yes, replace the drive.

E.201.x: Hardware overcurrent

Cause:

Hardware overcurrent is detected.

Fault code	Cause	Verification method	Solution
E.201.1 E.201.2 E.201.3	Commands are input simultaneously at the servo drive startup or the command input is too early.	Check whether a command is input before the operating panel displays "ry".	After the operating panel displays "ry", switch on the S-ON signal, and then input a command. If allowed, add a reference filter time constant or increase the acceleration/ deceleration time.
	Motor cables are in poor contact.	Check whether the drive power cables and motor cables connected to the U, V, and W terminals of the drive become loose.	Tighten the cables that are loose or disconnected.
	Motor cables are grounded.	After confirming the servo drive power cables and motor cables are connected properly, measure whether the insulation resistance between the drive U/V/W side and the PE cable is at MΩ level.	Replace the motor if the insulation is poor.
	U/V/W cables of the motor are short-circuited.	Disconnect the motor cables and check whether short circuit occurs among U, V, and W cables and whether burrs exist on the cable connections.	Connect the motor cables correctly.
	The motor is damaged due to overtemperature.	Disconnect the motor cables and measure whether the resistance among U, V, and W cables are balanced.	Replace the motor if the resistance is unbalanced.
	The gain is set improperly and the motor oscillates.	Check whether the motor vibrates or generates a sharp noise during startup and operation, or view the current feedback through software tool.	Perform gain tuning.
	The encoder cable is aged, corroded, or connected incorrectly or loosely.	Check whether the encoder cable provided by Inovance is used and whether the cable is aging, corroded, or connected loosely. Switch off the S-ON signal, rotate the motor shaft manually, and check whether the value of 200B-12h changes as the motor shaft rotates.	Re-solder, tighten or replace the encoder cable.
	The drive is faulty.	Disconnect the motor cable, and hold the MODE key down for 3s to reset the fault. Check whether the fault persists.	If yes, replace the drive.

E.207.x: d-/q-axis current overflow

Cause:

A current feedback error causes internal register overflow. An encoder feedback error causes internal register fault.

Fault code	Cause	Verification method	Solution
E.207.0	The d-/q-axis current overflows.	If the fault persists after repeated power cycling, the drive is faulty.	Replace the drive.

E.208.x: FPGA sampling operation timeout

Cause:

A Current feedback error causes the internal register overflow. An encoder feedback error causes the internal register fault.

Fault code	Cause	Verification method	Solution
E.208.0	FPGA operation timeout	See the following descriptions.	See the following descriptions.
E.208.1	Torque reference update by MCU times out.	The fault persists after repeated power cycling.	Replace the drive.
E.208.2	Encoder communication timeout	• Encoder wiring is incorrect. • The encoder cable is loosened. • The encoder cable is excessively long. • The encoder communication is disturbed. • The encoder is faulty.	• It is recommended to use the cables provided. If custom encoder cables are used, check whether the cables meet the specifications and whether they are shielded twisted pairs (STPs). • Check whether the connectors at both ends of the encoder are in good contact. • Contact the manufacturer. • Do not bundle or route motor cables and encoder cables together. Ensure the servo motor and servo drive are grounded properly. • Replace the drive.
E.208.3	Current sampling timeout	• Check whether large-scale devices are generating disturbance or disturbance sources such as variable-frequency devices exist inside the cabinet. • The internal current sampling integrated circuit is damaged.	• Route high-current cables and low-current cables through different routes and avoid bundling them together. • Replace the drive.
E.208.4	High-accuracy AD conversion times out.	Interference exists in high-accuracy AI channel. Check AI wiring according to the correct wiring diagram.	Use the twisted shielded pair cables and shorten the circuit length.

E.210.x: Output ground fault

Cause:

The drive detects motor phase current or bus voltage is abnormal during self-test at power-on.

Fault code	Cause	Verification method	Solution
E.210.0 E.210.1	The servo drive power cables (UVW) are short-circuited to ground.	Disconnect the motor cables, and measure whether the servo drive power cables (U/V/W) are short-circuited to ground (PE).	Re-connect the cables or replace the drive power cables.
	The motor is short-circuited to the ground.	After confirming the servo drive power cables and motor cables are connected properly, measure whether the insulation resistance between the servo drive U/V/W side and the PE cable is at MΩ level.	Replace the motor.
	The drive is faulty.	Remove the power cables from the drive. Check whether the fault persists after repeated power cycling.	If yes, replace the drive.

E.220.x: Incorrect phase sequence

Cause:

The drive detects abnormal motor phase sequence during auto-tuning or operation.

Fault code	Cause	Verification method	Solution
E.210.0 E.210.1	The servo drive power cables (UVW) are short-circuited to ground.	Disconnect the motor cable and measure continuity between each pair of power cable phases U, V and W respectively.	Re-connect the cables or replace the drive power cables.
	The phase sequence of power cables (U/V/W) is incorrect.	Check whether the wiring sequence of the U, V, W cables on the drive side is the same as that on the motor side.	Change the phase sequence of the motor cable.

E.234.x: Runaway

Cause:

The torque reference direction is opposite to the speed feedback direction in the torque control mode. The speed feedback direction is opposite to the speed reference direction in the position or speed control mode.

Fault code	Cause	Verification method	Solution
E.234.0	The UVW phase sequence is incorrect.	Check whether the servo drive power cables are in the same phase sequence as the motor U, V, and W cables.	Connect the U/V/W cables according to correct phase sequence.
	An error occurs on the initial phase detection of the motor rotor due to disturbing signals upon power-on.	The U/V/W phase sequence is correct, but E.234.0 occurs when the inverter unit is enabled.	Hold the MODE key down for 3s to reset the fault.
	The encoder model is wrong or the wiring is incorrect.	View the servo drive and servo motor nameplates to check whether ES810 series products and 20-bit servo motor (-A2***) are used.	Use matching servo drives and servo motors. If you use Inovance ES810 series products and 20-bit servo motors, set 2000-01h to 14000. Check the motor model, encoder type, and encoder cable connection again.
	The encoder cable is aged, corroded, or connected incorrectly or loosely.	• Check whether the encoder cable provided by Inovance is used and whether the cable is aging, corroded, or connected loosely. • Switch off the S-ON signal, rotate the motor shaft manually, and check whether the value of 200B-12h changes as the motor shaft rotates.	Re-solder, tighten or replace the encoder cable.

E.400.x: Main circuit overvoltage

Cause:

The DC bus voltage between + and - exceeds the overvoltage threshold (normal value: 537 V, overvoltage threshold: 820 V).

Fault code	Cause	Verification method	Solution
E.400.0	The voltage input to the main circuit is too high.	Check the specifications of the input power supply. Measure whether the input voltage (U, V, W) of the main circuit on the inverter unit side complies with the following specifications: DC bus voltage: 537 VDC to 679 VDC	Replace or adjust the power supply according to the specifications.
	The power supply is unstable or affected by lightning.	Check whether the power supply is unstable, affected by lightning, or complies with the preceding range.	Connect a surge protection device (SPD) and switch on the power supplies of the control circuit and the main circuit. If the fault persists, replace the drive.
	The motor is in abrupt acceleration/deceleration status and the maximum braking energy exceeds the absorptive capacity.	Check the acceleration/ deceleration time during operation and measure the DC bus voltage between + and - to check whether overvoltage occurs during deceleration.	After checking that the input voltage of the main circuit is within the specified range, increase the acceleration/ deceleration time if allowed.
	The bus voltage sampling value deviates greatly from the measured value.	Check whether 200B-1Bh (Bus voltage) is in the following range: 200B-1Bh > 820 V. Measure whether the DC bus voltage between + and - is within the normal range and is lower than 200B-1Bh.	Contact Inovance for technical support.
	The drive is faulty.	Check whether the fault persists after repeated power cycling of the main circuit.	Replace the drive.

E.410.x: Main circuit undervoltage

Cause:

The DC bus voltage between + and - is lower than the undervoltage threshold (normal value: 537 V; undervoltage threshold: 350 V).

Fault code	Cause	Verification method	Solution
E.410.0	The power supply of the main circuit is unstable or power failure occurs.	Check the specifications of the input power supply. Measure whether the input voltage of the main circuit on the non-inverter-unit side and the inverter unit (U/V/W) side is within the following range: DC bus voltage: 537 VDC to 679 VDC	Increase the capacity of the power supply.
	Instantaneous power-off occurs.		
	Check whether the power voltage drops during operation.	Monitor the power supply voltage and check whether the main circuit power supply is applied to other devices, resulting in insufficient power capacity and voltage drop.	
	The drive is faulty.	Check whether 200B-1Bh (Bus voltage) is in the following range: 200B-1Bh < 350 V. Check whether the fault persists after the main circuit is powered off and on repeatedly.	If yes, replace the drive.

E.422.x: Rectifier fault

Cause:

The rectifier unit is faulty.

Fault code	Cause	Verification method	Solution
E.422.0	The rectifier is faulty.	Check the fault code of the rectifier.	Check the rectifier user guide for troubleshooting.

E.423.x: Power failure of the rectifier

Cause:

The power supply of the rectifier unit fails.

Fault code	Cause	Verification method	Solution
E.423.0	The voltage on the input end of the rectifier unit is abnormal.	Check the bus voltage of the inverter unit and the fault code of the rectifier unit.	Check the rectifier user guide for troubleshooting.

E.500.x: Overspeed

Cause:

The actual speed of the motor exceeds the overspeed threshold.

Fault code	Cause	Verification method	Solution
E.500.0 E.500.1	The U/V/W phase sequence of motor cables is wrong.	Check whether the servo drive power cables are in the same phase sequence as the motor U,V, and W cables.	Connect the U/V/W cables according to correct phase sequence.
	200A-09h is set improperly.	Check whether the overspeed threshold is lower than the actual maximum motor speed. • Overspeed threshold = 1.2 x maximum motor speed (200A-09h = 0). • Overspeed threshold = 200A-09h (200A-09h ≠ 0, and 200A-09h < 1.2 x maximum motor speed)	Reset the overspeed threshold according to the mechanical requirements.
	The input reference exceeds the overspeed fault threshold.	Check whether the motor speed corresponding to the input reference exceeds the overspeed fault threshold. Position control mode: • In CSP mode, view the gear ratio 6091-01h/6091-02h to check the position reference increment for a single-shot synchronous cycle and convert it to the speed information. • In PP mode, view the gear ratio 6091-01h/6091-02h and check the value of 6081h (Profile velocity). • In HM mode, view the gear ratio 6091-01h/6091-02h, and determine the values of 6099-01h and 6099-02h. In speed control mode, view the gear ratio 6091h, 60FFh (Target velocity), 2006-07h to 2006-0Ah, and 607Fh (Max profile velocity). In torque control mode, view the value of 2007-12h (Speed limit source) and the corresponding speed limit value.	Position control mode: • CSP: Decrease the position reference increment for a single-shot synchronous cycle. Position ramps need to be added when planning commands in the host controller. • PP: Decrease the value of 6081h, or increase the acceleration/deceleration ramp (6083h, 6084h). • HM: Decrease 6099-01h and 6099-02h or increase the acceleration/deceleration ramp (609Ah). Reduce the gear ratio as needed. Speed control mode: Reduce the target velocity, speed limit, and gear ratio. In PV mode, increase the speed ramp 6083h and 6084h. In CSV mode, add speed ramp processing in the host controller. Torque control mode: Set the speed limit to a value lower than the overspeed threshold.
	The motor speed overshoots.	Check in the software tool whether the speed feedback exceeds the overspeed fault threshold.	Adjust the gains or mechanical operating conditions.
	The drive is faulty.	Hold the MODE key down for 3s to reset the fault. Check whether the fault persists.	If yes, replace the drive.

E.510.x: Pulse output overspeed

Cause:

When the pulse output function is used (2005-27h = 0 or 1), the output pulse frequency exceeds the frequency upper limit (1 MHz) allowed by the hardware.

Fault code	Cause	Verification method	Solution
E.510.0	The output pulse frequency exceeds the frequency upper limit (1 MHz) allowed by the hardware.	When 2005-27h is set to 0 (Encoder frequency-division output), calculate the output pulse frequency corresponding to the motor speed upon fault and check whether the pulse frequency exceeds the limit.	Decrease 2005-12h (Encoder frequency-division pulses) to make the output pulse frequency fall below the frequency upper limit allowed by hardware within the speed range required by mechanical conditions.
		When 2005-27h is set to 1 (Pulse reference synchronous output), the input pulse frequency exceeds 1 MHz or interference exists on pulse input pins. High-speed pulse input pins: • Differential input terminals: HPULSE+, HPULSE-, HSIGN+, HSIGN- • Maximum pulse frequency: 1 Mpps	Decrease the input pulse frequency to a value within the frequency upper limit allowed by hardware. Note: In this case, if you do not modify the electronic gear ratio, the motor speed decreases. If the input pulse frequency is high but still within the frequency upper limit allowed by hardware, take anti-interference measures (use STP cable for pulse input and set pin filter parameters 200A-19h or 200A-1F). This prevents interference pulses from being superimposed to actual pulse references, which can result in a false fault.

E.610.x: Drive overload

Cause:

Heat accumulation of the drive reaches the fault threshold.

Fault code	Cause	Verification method	Solution
E.610.0	The motor and encoder cables are connected improperly or in poor contact.	Check the cable connections among the motor, drive, and encoder according to *"5.5 System Wiring Diagram" on page 71*.	• Connect cables according to the wiring diagram. • It is recommended to use the cables provided. • When custom cables are used, prepare and connect the cables according to the hardware wiring instructions.
	The load is excessive, and the effective torque outputted by the motor keeps exceeding the rated torque.	• Confirm the overload characteristics of the motor or drive. • Check whether the average load rate of the inverter unit (200B-0DH) keeps exceeding 100.0%.	• Replace with a servo drive of higher capacity and a matching servo motor. • You can also reduce the load and increase the acceleration/deceleration time.
	Acceleration/deceleration is too frequent or the load inertia is excessively high.	• Calculate the mechanical inertia ratio or perform inertia auto-tuning and view 2008-10h (Inertia ratio). • Check the single-shot operation cycle when the motor runs cyclically.	Increase the acceleration/deceleration time during single-shot operation.
	The gains are improper or the stiffness level is excessively high.	Check whether the motor vibrates and generates unusual noise during operation.	Adjust the gain again.
	The model of the drive or motor is set improperly.	Check the bus motor model in 2000-06h and inverter unit model in 2001-0Bh.	Check the drive nameplate and set the drive model and motor model correctly.
	The motor is stalled due to mechanical factors, resulting in overload during operation.	Check the operation reference and motor speed (200B-01h) through the software tool or operating panel: • Operation reference in position control: 200B-0Eh (Input reference pulse counter) • Operation reference in speed control: 200B-02h (Speed reference) • Operation reference in torque control: 200B-03h (Internal torque reference) Check whether the reference value is not 0 but the motor speed is 0 rpm in the corresponding mode.	Eliminate mechanical factors.
	The drive is faulty.	After power-off, hold the MODE key down for 3s to reset the fault. Check whether the fault persists.	If yes, replace the drive.

E.620.x: Motor overload

Cause:

Heat accumulation of the motor reaches the fault threshold.

Fault code	Cause	Verification method	Solution
E.620.0 E.620.1	The motor and encoder cables are connected improperly or in poor contact.	Check the cable connections among the motor, drive, and encoder according to *"5.5 System Wiring Diagram" on page 71*.	• Connect cables according to the wiring diagram. • It is recommended to use the cables provided. • When custom cables are used, prepare and connect the cables according to the hardware wiring instructions.
	The load is excessive, and the effective torque outputted by the motor keeps exceeding the rated torque.	• Confirm the overload characteristics of the motor or drive. • Check whether the average load rate of the inverter unit (200B-0DH) keeps exceeding 100.0%.	• Replace with a servo drive of higher capacity and a matching servo motor. • You can also reduce the load and increase the acceleration/deceleration time.
	Acceleration/deceleration is too frequent or the load inertia is excessively high.	• Calculate the mechanical inertia ratio or perform inertia auto-tuning and view 2008-10h (Inertia ratio). • Check the single-shot operation cycle when the motor runs cyclically.	Increase the acceleration/deceleration time during single-shot operation.
	The gains are improper or the stiffness level is excessively high.	Check whether the motor vibrates and generates unusual noise during operation.	Adjust the gain again.
	The model of the drive or motor is set improperly.	Check the bus motor model in 2000-06h and inverter unit model in 2001-0Bh.	Check the drive nameplate and set the drive model and motor model correctly.
	The motor is stalled due to mechanical factors, resulting in overload during operation.	Check the operation reference and motor speed (200B-01h) through the software tool or operating panel: • Operation reference in position control: 200B-0Eh (Input reference pulse counter) • Operation reference in speed control: 200B-02h (Speed reference) • Operation reference in torque control: 200B-03h (Internal torque reference) Check whether the reference value is not 0 but the motor speed is 0 rpm in the corresponding mode.	Eliminate mechanical factors.
	The drive is faulty.	After power-off, hold the MODE key down for 3s to reset the fault. Check whether the fault persists.	Replace the drive.

E.630.x: Motor stall over-temperature protection

Cause:

The actual motor speed is lower than 10 rpm but the torque reference reaches the limit. The duration reaches the value set by 200A-21h.

Fault code	Cause	Verification method	Solution
E.630.0	U/V/W phase loss or incorrect phase sequence occurs on the drive.	Perform a no-load trial run on the motor and check the wiring.	Connect cables again according to the correct wiring diagram or replace the cables.
	The drive U/V/W cables or the encoder cable is disconnected.	Check the wiring.	Connect cables again according to the correct wiring diagram or replace the cables.
	The motor is stalled due to mechanical factors.	Check the operation reference and motor speed (200B-01h) through the software tool or operating panel: • Operation reference in position control: 200B-0Eh (Input reference pulse counter) • Operation reference in speed control: 200B-02h (Speed reference) • Operation reference in torque control: 200B-03h (Internal torque reference) Check whether the reference value is not 0 but the motor speed is 0 rpm in the corresponding mode.	Eliminate mechanical factors.

E.650.x: Heatsink overheat

Cause:

The temperature of the power module is higher than the overtemperature threshold.

Fault code	Cause	Verification method	Solution
E.650.0	The ambient temperature is too high.	Measure the ambient temperature.	Improve the cooling conditions of the drive to reduce the ambient temperature.
	The drive is restarted repeatedly to reset the overload fault.	Check whether an overload fault or alarm (E.610, E.620, E.630, E.650, and E.909) occurs through the fault log (200B-22h and 200B-23h).	Change the fault reset method. After overload occurs, wait for 30s and then perform the reset operation. Increase the capacity of the servo drive and servo motor, increase the acceleration/ deceleration time, and reduce the load.
	The fan is damaged.	Observe whether the fan works during operation.	Replace the drive.
	The installation direction of internal units and the clearance between units are improper.	Check whether the drive is installed properly.	Install the drive according to installation standards.
	The drive is faulty.	The fault persists even though the drive is restarted 10 minutes after power-off.	Replace the drive.

E.730.x: Encoder battery alarm

Cause:

The battery voltage of the absolute encoder is lower than 3.0 V.

Fault code	Cause	Verification method	Solution
E.730.0	The battery voltage of the absolute encoder is lower than 3.0 V.	Measure the battery voltage.	Replace with a new battery that meets the voltage requirements and set H0A-02 to 0.

E.731.x: Encoder battery failure

Cause:

The battery voltage of the absolute encoder is lower than 3.0 V.

Fault code	Cause	Verification method	Solution
E.731.0	The battery is not connected during power-off.	Check whether the battery is connected during power-off.	Set 200D-15h to 1 to clear the fault.
	The encoder battery voltage is excessively low.	Measure the battery voltage.	Replace with a new battery of the matching voltage.

E.733.x: Encoder multi-turn counting error

Cause:

An encoder multi-turn counting error occurs.

Fault code	Cause	Verification method	Solution
E.733.0	The encoder is faulty.	Set 200D-15h to 2 to clear the fault, and hold the MODE key for 3s to reset the fault. Check whether the fault persists.	Replace the motor.

E.740.x: Encoder interference

Cause:

The encoder Z signal is disturbed, resulting in excessive change of corresponding electrical angle of Z signal.

Fault code	Cause	Verification method	Solution
E.740.0 E.740.1 E.740.2 E.740.3 E.740.4 E.740.5 E.740.6 E.740.7 E.740.8	Encoder wiring is incorrect.	Check the encoder wiring.	Connect the encoder cables according to the correct wiring diagram.
	The encoder cable is loosened.	Check whether on-site vibration is excessive, which loosens the encoder cable and even damages the encoder.	Re-connect the encoder cables and ensure the encoder terminals are connected securely.
	The encoder Z signal suffers from interference.	Check the routing conditions on site. • Check whether ambient devices are generating disturbance and whether multiple disturbance sources such as variable-frequency devices are present inside the cabinet. • Make the drive stay in "rdy" status and rotate the motor shaft counterclockwise (CCW) manually. Then observe whether the value of 200B-12h (Electrical angle) increases/decreases smoothly. Turning one circle corresponds to five 0-360° (for Z series motor). For X series motors, turning one circle corresponds to four 0-360°. • If 200B-12h changes abnormally during rotation, the encoder is faulty. • If no alarm is reported during rotation but an alarm is reported during operation of the drive, interference may exist.	• It is recommended to use the cables provided. • If non-standard cables are used, check whether the cables meet the specifications and whether the cables are shielded twisted pair cables. • Lay the high-current cables and low-current cables separately. Do not bundle the motor cables and the encoder cables together. Ensure the servo motor and servo drive are well grounded. • Check whether the connectors at both ends of the encoder are in good contact and whether any pin retracts.
	The encoder is faulty.	• Replace with a new encoder cable. If the fault no longer occurs after cable replacement, it indicates the original encoder cable is damaged. • Keep the motor in a fixed position, power on and off the motor repeatedly and observe the change of 200B-12h (Electrical angle). The electrical angle deviation should be within ±30°.	• Use a new encoder cable. • If the fault persists after the encoder cable is replaced, the encoder may be faulty. In this case, replace the servo motor.

E.834.x: AD sampling overvoltage

Cause:

The AI sampling value is higher than 11.5.

Fault code	Cause	Verification method	Solution
E.834.1 E.834.2 E.834.3	The AI voltage is too high.	Measure the AI voltage and check whether the sampling voltage (H0B-21, H0B-22, or H0B-23) is higher than 11.5 V.	Adjust the input voltage and observe the sampling voltage until the sampling voltage falls below 11.5 V.
	AI wiring is incorrect or interference exists.	Check the AI wiring according to correct wiring diagram.	Use shielded twisted pair cables and shorten the circuit length. Increase the AI filter time constant: • AI1 filter time constant: H03-51 • AI2 filter time constant: H03-56 • AI3 filter time constant: H03-61

E.836.x: AD zero drift error

Cause:

The drive is not connected to 380 V power supply, and AI zero drift correction is only carried out under 24 V power supply.

Fault code	Cause	Verification method	Solution
E.836.0	The drive is not connected to 380 V power supply, and AI zero drift correction is performed only under 24 V power supply.	Check whether the drive is connected to the 380 V power supply.	After the main circuit is switched on, perform AI zero drift correction.

E.901.x: Excessive encoder position deviation

Cause:

When H00-39 is not zero and the position detection upon power-on is enabled, the difference between the position upon power-on and that upon power-off is greater than the angle set by H00-39.

Fault code	Cause	Verification method	Solution
E.901.0	The motor encoder is driven by mechanical adjustment upon power failure.	Power on again, and check the position deviation upon power-on and power-off.	Set H09-41 (dedicated for E.901.0) to 1 to reset the fault. After the fault is set, H09-41 is set to 0 automatically.
			Set H00-39 according to actual conditions. • Set H00-39 to 0 to mask fault E.901.0. • Increase H00-39 to increase the allowable deviation.
	The retention function upon power failure is not enabled.	Check whether H0A-03 is set to 1.	Set H0A-03 to 1.
	The encoder is damaged.	Check the preceding two conditions.	Replace the motor or encoder.

E.939.x: Motor power cable disconnected

Cause:

The actual phase current of the motor is lower than 10% of the rated current, and the actual motor speed is low but the internal torque reference value is high.

Fault code	Cause	Verification method	Solution
E.939.0	Motor power cables are disconnected.	Check whether the difference between 200B-19h (Phase current effective value) and 200B-03h (Internal torque reference) exceeds 500%, and whether 200B-01 (Actual motor speed) is lower than 1/4 of the rated motor speed.	Check the motor power cable connection and re-connect the cables. If necessary, replace with new cables.

E.940.x: Drive three-phase output current unbalanced

Cause:

The drive output is short-circuited to ground or current sampling fault occurs.

Fault code	Cause	Verification method	Solution
E.940.0	The drive output is short-circuited to ground or phase-to-phase short circuit occurs.	Check the wiring on site.	Wire cables correctly.
	A drive current sampling fault occurs.	Sample the drive output three-phase current waveform through the software tool.	Replace the drive.

E.942.x: Frequent parameter storage

Cause:

The number of parameters modified at the same time exceeds 200.

Fault code	Cause	Verification method	Solution
E.942.0	A great number of parameters are modified and saved frequently to EEPROM (200C-0Eh = 1).	Check whether parameters are modified frequently through the host controller.	Check the operation mode. For parameters that need not be saved in EEPROM, set 200C-0Eh to 0 before the host controller writes parameters.

E.A33.x: Encoder data error

Cause:

The drive output is short-circuited to ground or current sampling fault occurs.

Fault code	Cause	Verification method	Solution
E.A33.0	The bus incremental encoder cable is disconnected or loose.	Check the wiring.	Check for incorrect connection, open circuit, and poor contact of the encoder cable. Route the motor cable and encoder cable through different routes.
	An error occurs when reading/ writing the serial incremental encoder parameters.	If the fault persists after repeated power cycling, the encoder is faulty.	Replace the servo motor.

E.A34: Encoder echo check error

Cause:

After power-on, an error occurs during reading the rotor initial phase information of the 2500-PPR incremental encoder.

Fault code	Cause	Verification method	Solution
E.A34.0	The drive and motor do not match.	According to the drive and motor nameplate, check whether the correct drive and motor are used and whether 2000-01h (Motor code) is set to 14000.	Replace with matching drive and motor.
	The encoder cable is disconnected.	Check whether encoder cable is disconnected and whether the cable ends are connected firmly to the servo motor and servo drive.	Use a new encoder cable and connect it securely.

E.A35: Encoder Z signal loss

Cause:

The Z signal of the 2500-PPR incremental encoder is lost or AB signal edges change.

Fault code	Cause	Verification method	Solution
E.A35.0	The Z signal is lost due to encoder fault.	Use a new encoder cable and connect cables correctly. Then rotate motor shaft manually and check whether the fault persists.	If yes, replace the servo motor.
	Poor contact or incorrect wiring results in Z signal loss.	Rotate the motor shaft manually and check whether the fault persists.	Check whether the encoder cable is in good contact. Re-connect the encoder cable or replace the cable.

E.B00.x: Excessive position deviation

Cause:

The position deviation is higher than the value of 6065h in position control mode.

Fault code	Cause	Verification method	Solution
E.B00.6	U/V/W phase loss or incorrect phase sequence occurs on the drive.	Perform a no-load trial run on the motor and check the wiring.	Connect cables again according to the correct wiring diagram or replace the cables.
	The drive U/V/W cables or the encoder cable is disconnected.	Check the wiring.	Perform wiring again. The U/V/W terminals of the servo motor power cables must correspond with those of the drive power cables. If necessary, replace all cables and connect cables properly.
	The motor is stalled due to mechanical factors.	Check the operation reference and motor speed (200B-01h) through the software tool or operating panel: • Operation reference in position control: 200B-0Eh (Input reference pulse counter) • Operation reference in speed control: 200B-02h (Speed reference) • Operation reference in torque control: 200B-03h (Internal torque reference) Check whether the reference value is not 0 but the motor speed is 0 rpm in the corresponding mode.	Eliminate mechanical factors.
	The drive gain values are excessively low.	Check the position loop gain and speed loop gain of the drive. • 1st gain set: 2008-01h to 2008-03h • 2nd gain set: 2008-04h to 2008-06h	Adjust the gain manually or perform automatic gain auto-tuning.
	The position reference increment is excessive.	Position control mode: • In CSP mode, view the gear ratio 6091-01h/6091-02h to check the position reference increment for a single-shot synchronous cycle and convert it to the speed information. • In PP mode, view the gear ratio 6091-01h/6091-02h and check the value of 6081h (Profile velocity). • In HM mode, view the gear ratio 6091-01h/6091-02h, and determine the values of 6099-01h and 6099-02h.	• CSP: Decrease the position reference increment for a single-shot synchronous cycle. The host controller needs to add position ramps when generating references. • PP: Decrease the value of 6081h, or increase the acceleration/deceleration ramp (6083h, 6084h). • HM: Decrease 6099-01h and 6099-02h, or increase the acceleration/deceleration ramp (609Ah). Decrease the gear ratio according to actual conditions.

Fault code	Cause	Verification method	Solution
E.B00.6	The value of 6065h is too low under the operating conditions.	Check whether the value of 6065h is excessively low.	Increase the value of 6065h.
	The drive or motor is faulty.	Monitor the operation waveform through the oscilloscope function in the software tool: position reference, position feedback, speed reference, and torque reference.	If the position reference is not 0 but the position feedback is always 0, replace the drive or motor.

E.B01: Position reference too large

Cause:

The position reference for the adjacent synchronization cycle is too large.

Fault code	Cause	Verification method	Solution
E.B01.0	The position reference increment is excessive.	Check the target position reference increment of the adjacent synchronous cycle (namely, motor speed reference).	Reduce the target position reference increment.
	The target position (607Ah) is not aligned with the current position before mode switchover or S-ON signal activation.	Check whether mode switchover or S-ON signal activation is performed in the controller software.	Assign the value of the current position to the target position (607A) before mode switchover or S-ON signal activation.
	The cumulative position reference is too large due to synchronization signal loss.	Monitor SYNC and IRQ phases through the oscilloscope and check whether excessive fluctuation occurs.	For the host controller AM600, set the synchronous offset to 0. For other host controllers, check the communication state.
	The motor speed limit is set improperly.	Check the maximum motor speed and maximum profile speed.	Check whether the maximum speed of the motor meets the requirements and whether the maximum profile speed (607Fh) is too low.

E.B02.x: Excessive position deviation in fully closed-loop mode

Cause:

The absolute value of the position deviation in fully closed-loop mode exceeds 200F-09h (Excessive position deviation threshold in fully closed-loop mode).

Fault code	Cause	Verification method	Solution
E.B02.0	U/V/W phase loss or incorrect phase sequence occurs on the drive.	Perform a no-load trial run on the motor and check the wiring.	Connect cables again according to the correct wiring diagram or replace the cables.
	The drive U/V/W cables or encoder cable is disconnected.	Check the wiring.	Perform wiring again. The U/V/W terminals of the servo motor power cables must correspond with those of the drive power cables. If necessary, replace all cables and connect cables properly.
	The motor is stalled due to mechanical factors.	Check the operation reference and motor speed (200B-01h) through the software tool or operating panel: • Operation reference in position control: 200B-0Eh (Input reference pulse counter) • Operation reference in speed control: 200B-02h (Speed reference) • Operation reference in torque control: 200B-03h (Internal torque reference) Check whether the reference value is not 0 but the motor speed is 0 rpm in the corresponding mode.	Eliminate mechanical factors.
	The drive gain values are excessively low.	Check the position loop gain and speed loop gain of the drive. • 1st gain set: 2008-01h to 2008-03h • 2nd gain set: 2008-04h to 2008-06h	Adjust the gain manually or perform automatic gain auto-tuning.
	The position reference increment is excessive.	Position control mode: • In CSP mode, view the gear ratio 6091-01h/6091-02h to check the position reference increment for a single-shot synchronous cycle and convert it to the speed information. • In PP mode, view the gear ratio 6091-01h/6091-02h and check the value of 6081h (Profile velocity). • In HM mode, view the gear ratio 6091-01h/6091-02h, and determine the values of 6099-01h and 6099-02h.	• CSP: Decrease the position reference increment for a single-shot synchronous cycle. The host controller needs to add position ramps when generating references. • PP: Decrease the value of 6081h, or increase the acceleration/deceleration ramp (6083h, 6084h). • HM: Decrease 6099-01h and 6099-02h, or increase the acceleration/deceleration ramp (609Ah). Decrease the gear ratio according to actual conditions.

Fault code	Cause	Verification method	Solution
E.B02.0	The value of 6065h is too low under the operating conditions.	Check whether the value of 6065h is excessively low.	Increase the value of 200F-09h.
	The drive or motor is faulty.	Monitor the operation waveform through the oscilloscope function in the software tool: position reference, position feedback, speed reference, and torque reference.	If the position reference is not 0 but the position feedback is always 0, replace the drive or motor.

E.B03.x: Electronic gear ratio limit violation

Cause:

An electronic gear ratio exceeds the limit: (0.001 x Encoder resolution/10000, 4000 x Encoder resolution/10000).

Fault code	Cause	Verification method	Solution
E.B03.0 E.B03.3	The set electronic gear ratio exceeds the preceding range.	Check whether the ratio value of 6091-01h/6091-02h exceeds the preceding range.	Set the gear ratio according to the preceding range.
	Parameters are modified in a wrong sequence.	Check whether this fault is reported when you modify a gear ratio that is within the preceding range.	Hold the MODE key down for 3s to reset the fault.

E.D12.x: CAN information loss of the rectifier unit

Cause:

The CAN communication between the rectifier unit and the inverter unit is interrupted.

Fault code	Cause	Verification method	Solution
E.D12.0	The CAN communication cable is damaged.	Check whether the CAN connection between the rectifier unit and inverter unit is proper.	Replace with a qualified CAN cable.

9.3.6 Solutions To Alarms

A.110.x: Frequency-division pulse output setting fault

Cause:

When using the encoder frequency-division output function (2005-27h = 0), the number of encoder frequency-division pulses does not match the threshold determined by the encoder specification.

Fault code	Cause	Verification method	Solution
A.110.0	The number of encoder frequency-division pulses is outside the specified range.	• For incremental encoders, the number of frequency-division pulses cannot exceed the encoder resolution. • The resolution of a 20-bit bus incremental encoder is 1048576 P/r. • The resolution of a 2500-PPR incremental encoder is 10000 P/r. • For the absolute encoder, the number of frequency-division pulses cannot exceed 1/4 of the encoder resolution.	Reset the frequency-division pulses in 2005-12h according to the specified range.

A.730.x: Encoder battery alarm

Cause:

The battery voltage of the absolute encoder is lower than 3.0 V.

Fault code	Cause	Verification method	Solution
A.730.0	The battery voltage of the absolute encoder is lower than 3.0 V.	Measure the battery voltage.	Replace with a new battery that meets the voltage requirements and set H0A-02 to 0. The low battery voltage leads to encoder position loss. After the battery is replaced, the mechanical position corresponding to the encoder position needs to be re-calibrated.

A.900.x: DA emergency brake

Cause:

The logic of the DI (including the hardware DI and virtual DI) assigned with DI function 34 (FunIN.34: EmergencyStop) is activated.

Fault code	Cause	Verification method	Solution
A.900.0	The DI function 34 (FunIN.34: Emergency stop) is triggered.	Check whether the logic of DI assigned with FunIN.34: Emergency stop is activated.	Check the operation mode and deactivate the DI braking signal without affecting the safety performance.

A.941.x: Parameter modification can be activated only after the MODE key is held down for 3s

Cause:

Modifications of some parameters take effect only at next power-on. When these parameters are modified, the drive reminds users to hold MODE key down for 3s to perform an automatic reset.

Fault code	Cause	Verification method	Solution
A.941.0	The parameters modified are designated to be activated at next power-on.	Check whether these parameters are modified.	Hold the MODE key down for 3s to reset the fault.

A.942.x: Frequent parameter storage

Cause:

The number of parameters modified at the same time exceeds 200.

Fault code	Cause	Verification method	Solution
A.942.0	A great number of parameters are modified and saved frequently to EEPROM (200C-0Eh = 1).	Check whether parameters are modified frequently through the host controller.	Check the operation mode. For parameters that need not be saved in EEPROM, set 200C-0Eh to 0 before the host controller writes parameters.

A.950.x: Forward overtravel alarm

Cause:

The logic of the DI assigned with FunIN.14: P-OT (Positive limit switch) is active.

Fault code	Cause	Verification method	Solution
A.950.0	The logic of the DI assigned with FunIN.14: P-OT (Positive limit switch) is active.	• Check whether a DI is assigned with FunIN14 (P-OT) in group 2003h. • Check whether the DI logic of the corresponding bit of 200C-0Eh (Monitored input signal) is active.	Check the operation mode. On the prerequisite of safety, send a reverse run command or rotate the motor to deactivate the DI function 14.

A.952.x: Reverse overtravel alarm

Cause:

The logic of the DI assigned with FunIN.15: N-OT (Negative limit switch) is active.

Fault code	Cause	Verification method	Solution
A.952.0	The logic of the DI assigned with function 15 (FunIN.15, N-OT, negative overtravel switch) is active.	• Check whether a certain DI terminal in group 2003h is assigned with DI function 15. • Check whether the DI logic of the corresponding bit of 200C-0Eh (Monitored input signal) is active.	Check the operation mode. Send a forward run command or rotate the motor to deactivate the logic of DI assigned with FunIN.15 without affecting the safety performance.

A.980.x: Encoder internal fault

Cause:

An encoder algorithm error occurs.

Fault code	Cause	Verification method	Solution
A.980.0	An internal fault occurs on the encoder.	If the fault persists after repeated power cycling, the encoder is faulty.	Replace the servo motor.

9.3.7 Communication Fault Recovery Mode

E.E08.x: Sync loss

Cause:

Synchronous signal loss occurs on the master during synchronous communication.

Fault code	Cause	Verification method	Solution
E.E08.0	The master synchronization signal is lost during synchronous communication.	• Check whether the shielded twisted cable is used as the communication cable. • Check whether the drive is grounded properly.	• Use shielded twisted pair cables. • Perform wiring according to the wiring instructions. • Set the synchronization cycle for pre-use, and switch the EtherCAT state machine to the operation mode. • If excessive error exists in the master synchronization cycle, adjust the master or increase the synchronous loss fault tolerance (200C-24h).

E.E11.x: XML configuration file not programmed

Cause:

The XML configuration file is not programmed.

Fault code	Cause	Verification method	Solution
E.E11.6	The device configuration file is not programmed.	When the host controller scans the slave, its ID is null.	Program the device configuration file.
	The device configuration file is not programmed.	The drive is faulty.	Replace the drive.

E.E12.x: Network initialization failure

Cause:

Network initialization fails.

Fault code	Cause	Verification method	Solution
E.E12.0	The FPGA firmware is not programmed.	Check whether 2001-02h is set to 01XX.Y.	Program the FPGA firmware.
	The device configuration file is not programmed.	After connecting the drive to the master, view whether the first left LED on the operating panel displays the states of the corresponding network port, and the second LED displays a number among 1, 2, 4, 8.	Program the device configuration file.
	The drive is faulty.	The drive is faulty.	Replace the drive.

E.E13.x: Synchronization cycle setting error

Cause:

After the system switches to the operation mode, the synchronization cycle is not an integer multiple of 125 us or 250 us.

Fault code	Cause	Verification method	Solution
E.E13.0	The synchronization cycle is not an integer multiple of 125 μs or 250 μs.	Check the synchronization cycle set in the host controller.	Modify the synchronization cycle to an integer multiple of 125 us or 250 us.

E.E15.x: Excessive synchronization cycle error

Cause:

The synchronization cycle error exceeds the threshold.

Fault code	Cause	Verification method	Solution
E.E15.0	The synchronization cycle error of the controller is excessive.	Measure the synchronization cycle of the controller. • Measure the synchronization cycle • through a digital oscilloscope or the oscilloscope function in the software tool.	Increase 200C-2Dh and continue the test. If this fault persists, set 200C-2Ch to 2.

10 Routine Maintenance

10.1 Daily Maintenance Items

Average annual ambient temperature: 30°C Average load rate: < 80% Daily operating time: < 20 h

Perform daily and regular inspections according to the following table.

Type	Cycle	Item
Routine Inspection	Daily	Check the ambient temperature, humidity, dust, and foreign objects.
		Check whether there is abnormal vibration and noise.
		Check whether the power supply voltage is normal.
		Check whether there is foreign odor.
		Check whether the air vent is stuck with fiber threads.
		Check whether the front end and connectors of the drive are clean.
		Check whether there are foreign objects on the load side.
Regular inspection	One year	Check whether the fastening parts are loose.
		Check for signs of overtemperature.
		Check whether the terminal block is damaged.
		Check whether the fastening parts of the terminal block become loose.

10.1.1 Routine Cleaning Items

Check the following items during routine cleaning.

No.	Routine Cleaning Items	Tick
1	Clean the dust on the equipment surface, especially the metallic dust.	□
2	Keep the front end of the servo drive and the connectors clean.	□

Note

- Before cleaning, switch off the power supply and clean with an air gun or a piece of dry cloth.
- Do not use gasoline, dilutes, alcohol, or acid or alkaline detergent to prevent enclosure discolor or damage.

10.1.2 Routine Checklist

The internal components of the product may be aged due to temperature, humidity, dust, and vibration, leading to potential faults or shortening the service life of the drive. Therefore, it is necessary to carry out routine and periodic maintenance. More frequent inspection will be required if it is used in harsh environments, such as high ambient temperature, frequent start and stop, fluctuations in the AC power supply or load, excessive vibrations or shock, dust, and hydrochloric acid corrosion.

Check the following items daily to avoid deterioration in performance or product failure. Copy this checklist and sign the "checked" column after each inspection.

Item	Description	Solution	Tick
Motor	The motor encounters unusual vibration and noise.	• Ensure mechanical connections are normal. • Ensure no phase loss occurs on the motor. • Ensure that motor fixing screws are connected properly.	□
Fan of the cabinet unit	Check whether the cooling fans of the drive and the motor operate properly.	• Check whether the fan of the high-voltage unit is operating. • Ensure normal cooling fan of the motor. • Ensure unobstructed air filter. • Ensure that the ambient temperature is within the allowable range.	□
Installation Environment	The power cabinet and cable trays are abnormal.	• Check that the insulation of inlet/outlet cables are not damaged. • Ensure that the mounting bracket does not vibrate. • Ensure that the copper busbar and terminals are tightened and not corroded.	□
Load	The operating current of the drive exceeds the rated current of the drive and the motor for a certain period.	• Ensure motor parameters are set properly. • Ensure motor overload does not occur. • Ensure excessive mechanical vibration (typically below 0.6 g) does not occur.	□
Input voltage	The supply voltage between the main circuit and control circuit is abnormal.	• Ensure that the input voltage is within the allowable range. • Check that no heavy load is started around the drive.	□
With brake	The brake circuit is abnormal.	• Check that the control wiring is secure and there are no signs of discoloration or melting. • Ensure that the brake acts properly. Perform the brake action test separately.	□

10.1.3 Periodic Inspection Checklist

Perform periodic inspection on items that are difficult to check during operation. Clear the dust especially metal powders on the surface of the drive to prevent the dust from entering the drive. Clear the greasy dirt from the cooling fan of the drive.

Danger

- Do not perform inspection when the power supply is switched on.
- Before inspection, cut off all power supplies and wait for at least 10 minutes before further operations to avoid danger caused by the residual voltage in the capacitor of the product.

Item	Description	Solution	Tick
Drive	There are wastes, dirt, or dust on the surface.	• Check whether the drive is powered off. • Use a vacuum cleaner (rather than directly touch components) to suck up wastes and dust. • Wipe the surface dirt difficult to clean with alcohol and wait until the surface becomes dry.	☐
Cable	• Power cables or connections discolor occur. • The insulation layer ages or cracks.	• Replace cracked cables. • Replace damaged terminals.	☐
Peripherals of the electromagnetic contactor	• The contactor cannot fully be closed and has abnormal sound when it operates. • There are short circuits, water stain, expansion or cracking occurs on any peripheral device.	Replace the abnormal components.	☐
Air duct	• The air filter and heatsink are clogged. • The fan is damaged.	• Clean the air duct. • Replacing the Fan	☐
Control circuit	• Control components are in poor contact. • The terminal screws are loose. • The insulation of the control cable is cracked.	• Clean the unwanted objects on the surface of control cables and terminals. • Replace damaged or corroded control cables.	☐

Main Circuit Insulation Test

Caution

- Before measuring the insulation resistance with a megameter (500 VDC megameter recommended), disconnect the main circuit from the drive.
- Do not conduct insulation test on the control circuit with an insulation resistance meter. See the following figure for details. Do not perform the high voltage (> 500 V) test because it has been completed before delivery.

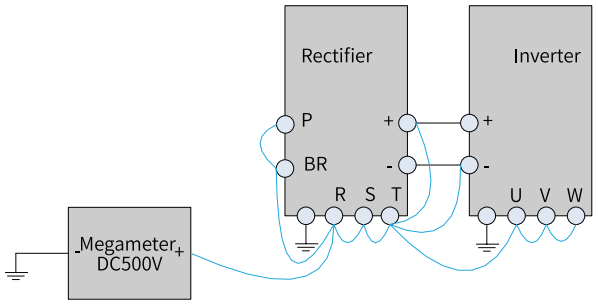

Figure 10-1 Insulation test on the main circuit

The measured insulation resistance must be greater than 5 MΩ.

Before test, remove the voltage dependent resistor (VDR) screw, as shown in the following position.

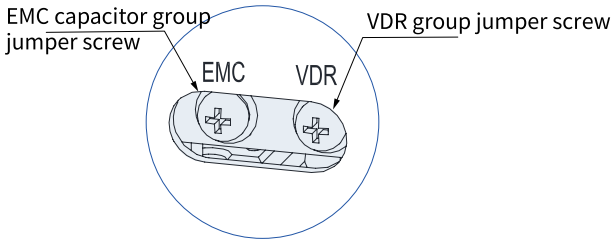

Figure 10-2 Positions of VDR and EMC grounding jumpers

10.2 Components Replacement

10.2.1 Maintainable Parts

The electrical and electronic parts inside the servo drive may be mechanically worn out and degraded, replace the parts based on the following table. Contact Inovance or Inovance agent before replacement to check whether the part needs to be replaced.

Category	Standard replacement interval	Remarks
Fan	Inverter unit: ≥ 3 years rectifier unit: ≥ 5 years	The standard replacement interval is for reference only. If any device or component works improperly before the replacement cycle expires, replace it immediately.

10.2.2 Replacing the Cooling Fan

rectifier unit

The cooling fan is easy to wear, and the general service time is equal to or longer than five years.

Note

The standard lifetime indicates the lifetime when the components are used in the following conditions. You can determine when to replace these components according to the actual operating time.

- Ambient temperature: 40°C
- Load rate: 80%
- Operating rate: 24 hours per day

1. Possible damage cause: Bearing worn, blade aging.
2. How to determine whether the cooling fan needs to be replaced: a. Check whether the blade is cracked. b. Check whether the fan generates an unexpected noise during start. c. Check whether the blade works properly.
3. Replacement of the cooling fan:
   - Press the fan cover hook and pull the fan outward.

- After replacing the fan, ensure the fan blows the air upward.

Number of cooling fans

Table 10–1 Size and number of fans on the rectifier unit

Model	Number of Fans			
	40 × 40 × 28 mm	80 × 80 × 25 mm	80 × 80 × 32 mm	80 × 80 × 38 mm
ES810-20M4T56-10	1	-	-	-
ES810-20M4T110-10	-	1	-	-
ES810-20M4T240-00	-	-	2	-
ES810-20M4T358-00	-	-	-	3

Removing and installing the cooling fan

- Removing and installing the fan (80 × 80 mm) of the unit with the same height

Removing the fan	
1. Gently press the snap-fit joint of the fan cover, and remove the fan cover. 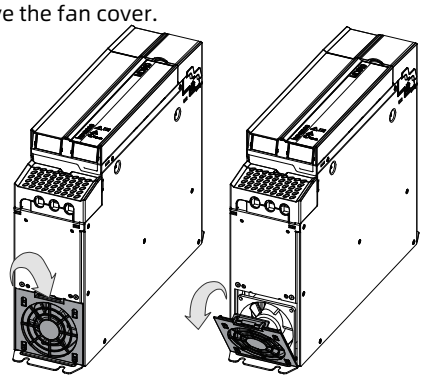	2. Pull the fan outward and remove the connector of the power cable from the socket. 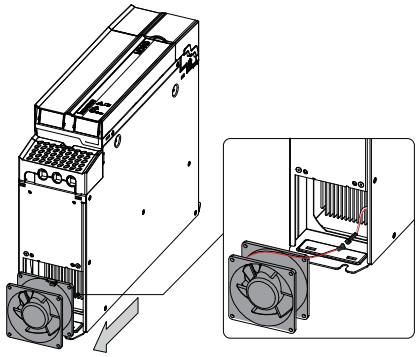
Installing the fan	

1. Install the fan in the reverse order of removal and ensure the correct direction of the fan. Plug the power cable plug into the socket, as shown in the following figure. 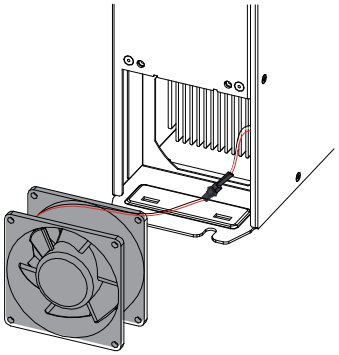	2. Install the fan into the drive with the fixing holes at the bottom of the fan aligned with the positioning pins on the drive. 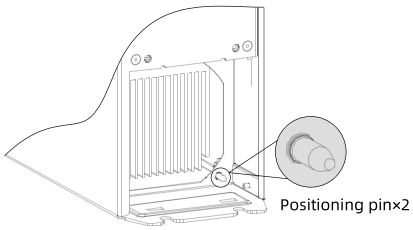
3. Insert the two snap-fit joints into the groove and press down to fix the snap-fit joints. 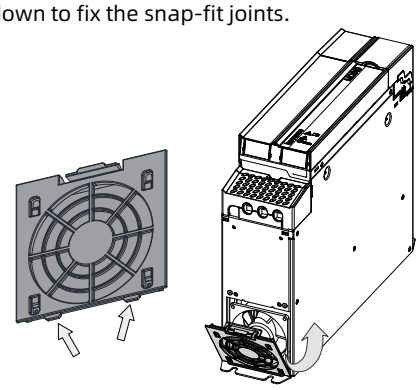	4. After replacement is completed, check that the air flow direction is upright.

Inverter unit

The cooling fan is easy to wear, and the general service time is equal to or longer than three years.

Note

The standard lifetime indicates the lifetime when the components are used in the following conditions. You can determine when to replace these components according to the actual operating time.

- Ambient temperature: 40℃
- Load rate: 80%
- Operating rate: 24 hours per day

1. Possible damage cause: Bearing worn, blade aging.
2. How to determine whether the cooling fan needs to be replaced: a. Check whether the blade is cracked. b. Check whether the fan generates an unexpected noise during start. c. Check whether the blade works properly.
3. Replacement of the cooling fan:

   - Press the fan cover hook and pull the fan outward.
   - After replacing the fan, ensure the fan blows the air upward.

Number of cooling fans

Table 10–2 Cooling fan

Model	Number of Fans						
	40 × 40 × 28 mm	50 × 50 × 15 mm	80 × 80 × 25 mm	80 × 80 × 32 mm	80 × 80 × 38 mm	120 × 120 × 38 mm	Exhaust status
ES810-50M4T005-xx ES810-50M4T009-xx ES810-50M4T013-xx	1	-	-	-	-	-	Blow status
ES810-50M4T017-xx ES810-50M4T025-xx ES810-50M4T032-xx	-	-	1	-	-	-	
ES810-50M4T037-xx	-	-	-	1	-	-	
ES810-50M4T045-xx ES810-50M4T060-xx ES810-50M4T075-xx	-	1	-	1	-	-	
ES810-50M4T091-xx ES810-50M4T112-xx ES810-50M4T150-xx	-	-	-	-	2	-	Suction
ES810-50M4T200-xx ES810-50M4T240-xx	-	-	-	-	3	-	

Table 10–3 Built-in fan

Model	Number of Fans
ES810-50M4T005-xx ES810-50M4T009-xx ES810-50M4T013-xx	DC fan 12V-2.4W-13.1CFM-42.5dB(A)-40 × 40 × 28mm-IP52
ES810-50M4T017-xx ES810-50M4T025-xx ES810-50M4T032-xx	DC fan-24 V-3.84W-56.16CFM-43.4 dB(A)-80 × 80 × 25 mm-IP52
ES810-50M4T037-xx	DC fan-24 V-10.5W-87.9 CFM-55dB(A)-80 × 80 × 32 mm-IP52 (glued)
ES810-50M4T045-xx ES810-50M4T060-xx ES810-50M4T075-xx	DC fan-24 V-10.5W-87.9 CFM-55dB(A)-80 × 80 × 32 mm-IP52 (glued) DC fan-24V-2.88W-20.2CFM-38dB(A)-50 × 50 × 15 mm-IP52 (glued)
ES810-50M4T091-xx ES810-50M4T112-xx ES810-50M4T150-xx	DC fan-24 V-10.5W-87.9 CFM-55dB(A)-80 × 80 × 32 mm-IP52 (glued)
ES810-50M4T200-xx ES810-50M4T240-xx	DC fan-24 V-10.5W-87.9 CFM-55dB(A)-80 × 80 × 32 mm-IP52 (glued)

Removing and installing the cooling fan

- Removing and installing the fan (80 × 80 mm) of the unit with the same height

<table>
<tr><th colspan="2">Removing the fan</th></tr>
<tr><td>1. Gently press the snap-fit joint of the fan cover, and remove the fan cover.
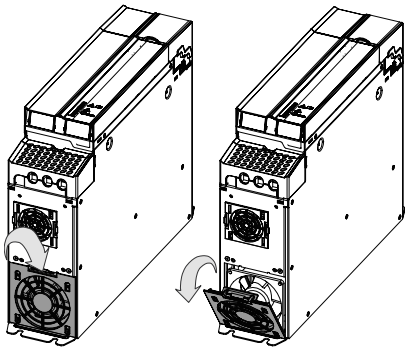</td><td>2. Pull the fan outward and remove the connector of the power cable from the socket.
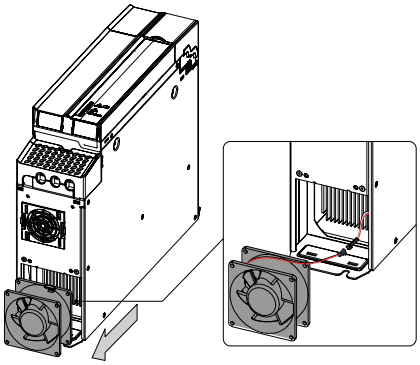</td></tr>
<tr><th colspan="2">Installing the fan</th></tr>
<tr><td>1. Install the fan in the reverse order of removal and ensure the correct direction of the fan. Plug the power cable plug into the socket, as shown in the following figure.
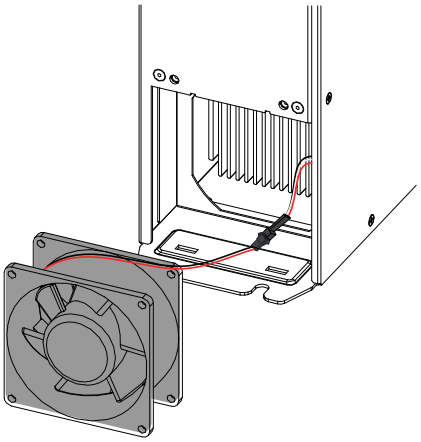</td><td>2. Install the fan into the drive with the fixing holes at the bottom of the fan aligned with the positioning pins on the drive.
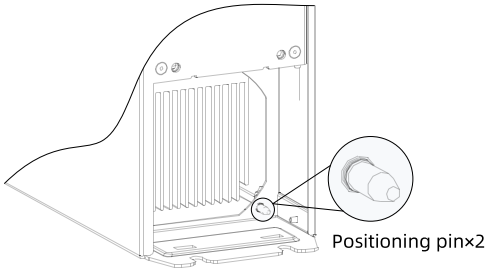
</td></tr>
<tr><td>3. Insert the two snap-fit joints into the groove and press down to fix the snap-fit joints.
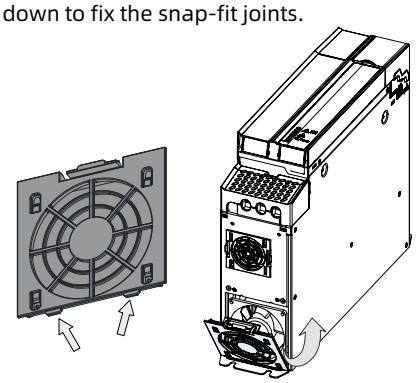</td><td>4. After replacement is completed, check that the air flow direction is upright.</td></tr>
</table>

- Removing and installing the fan (40 × 40 mm, 50 × 50 mm) of the booksize unit

<table>
<tr><th colspan="2">Removing the fan</th></tr>
<tr><td>Press the snap-fit joint at both sides of the fan cover and remove the fan cover and the fan.
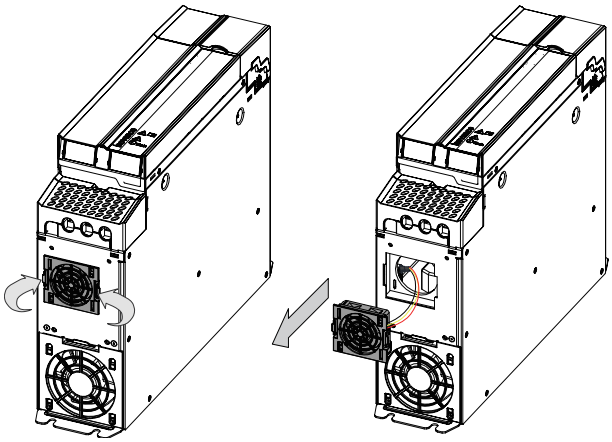</td><td>Detach the fan cover from the fan upwards and disconnect the power cable plug from the socket.
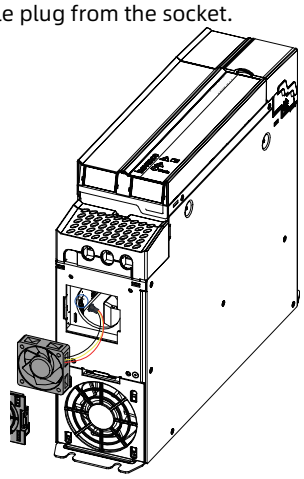</td></tr>
<tr><th colspan="2">Installing the fan</th></tr>
<tr><td colspan="2">1. Install the fan in the reverse order of removal and ensure the correct direction of the fan.
• Plug the power cable plug into the socket.
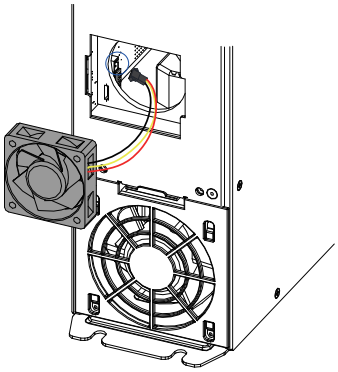
• Install the fan into the fan cover, place the assembly into the drive, and install the snap-fit joint at both sides of the fan into the groove.
• After replacing the fan, ensure the fan blows the air upward.</td></tr>
</table>

11 List of Options

11.1 List of Options

Name		Applicable model	Model	No.
External power terminal for common bus	External power terminal for 100 A common bus	22 kW	MD810-CON1	01040014
	External power terminal for 200 A common bus	45 kW, 110 kW, and 160 kW	MD810-CON2	01040015
Through-hole mounting bracket	50-mm-wide through-hole mounting bracket	22 kW	MD810-AZJ50M-W1	01040039
	100-mm-wide through-hole mounting bracket	45 kW	MD810-AZJ50M-W2	01040040
	200-mm-wide through-hole mounting bracket	110 kW	MD810-AZJ20M-W3	01040042
	300-mm-wide through-hole mounting bracket	160 kW	MD810-AZJ20M-W4	01040043
Air guide plate	50-mm-wide air guide plate	22 kW	MD810-DLB-W1	01040044
	100-mm-wide air guide plate	45 kW	MD810-DLB-W2	01040045
	200-mm-wide air guide plate	110 kW	MD810-DLB-W3	01040046
	300-mm-wide air guide plate	160 kW	MD810-DLB-W4	01040047
Shield bracket	50-mm-wide shield bracket	22 kW	MD810-PBJ50M-W1	1040048
	100-mm-wide shield bracket	45 kW	MD810-PBJ50M-W2	1040049
	200-mm-wide shield bracket	110 kW	MD810-PBJ50M-W3	1040050
External LCD operating panel	SOP-20 external LCD operating panel	All series	SOP-20-810	01040028
Network cable for the external operating panel	3 m network cable	All series	C45590-GNCN-C25003	01040020
Network cable	250 mm network cable	Applicable to 100-mm-wide model	C45590-GNCN-C2500025	01040018
	350 mm network cable	Applicable to 200-mm-wide model	C45590-GNCN-C2500035	01040019
	430 mm network cable	Applicable to 300-mm-wide model	C45590-GNCN-C2500043	01040021

11.2 External Power Terminals of Common Bus

100 A applicable to 22 kW rectifier unit (50-mm-wide model)

The external power terminals for 200 A common bus are applicable to 45 kW, 110 kW, and 160 kW rectifier units (100-mm/200-mm/300-mm-wide models).

The appearance is shown below.

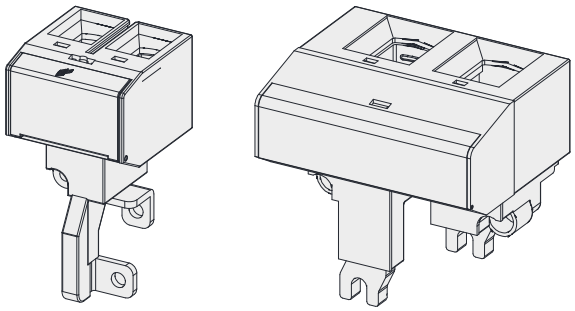

Figure 11-1 Appearance of the external terminal for common bus

Table 11–1 Recommended cross-sectional area for external terminal of common bus

Model	Specifications
External power terminal for 100 A common bus	10AWG to 1AWG
External power terminal for 200 A common bus	6 AWG to 250 kcmil

11.3 Through-hole Mounting Bracket and Backplate Cut-out Dimensions

The through-hole mounting bracket is only applicable to single-row installation. When installing a booksize unit, select a through-hole mounting bracket based on the width of the unit.

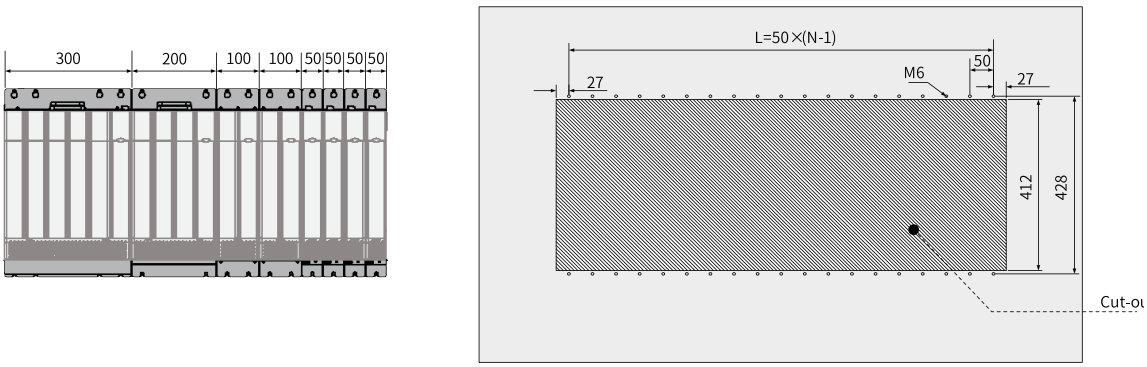

Figure 11-2 Dimensions of the through-hole mounting bracket and cut-out dimensions on the back-plate (unit: mm)

11.4 Air Guide Plate

The air guide plate is applicable to double-row installation. When installing a booksize unit, select an air guide plate based on the width of the unit.

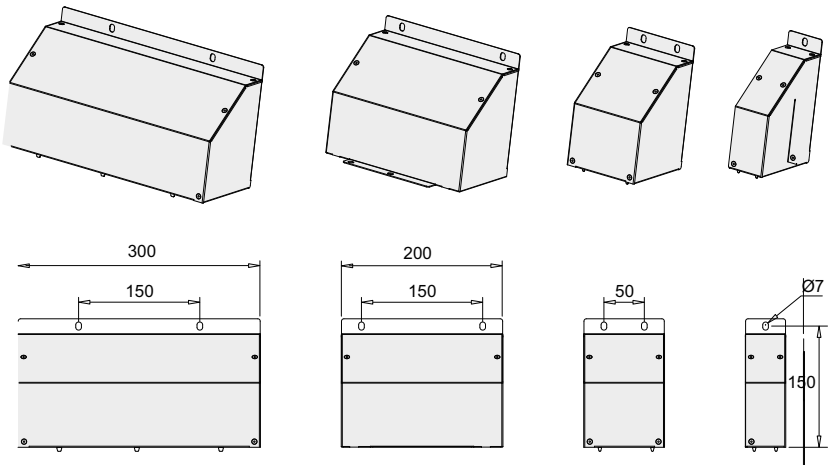

Figure 11-3 Dimensions of the air guide plate (unit: mm)

11.5 Shield Bracket

Use a shield bracket to fix the shield of the input cables of the booksize rectifier unit.

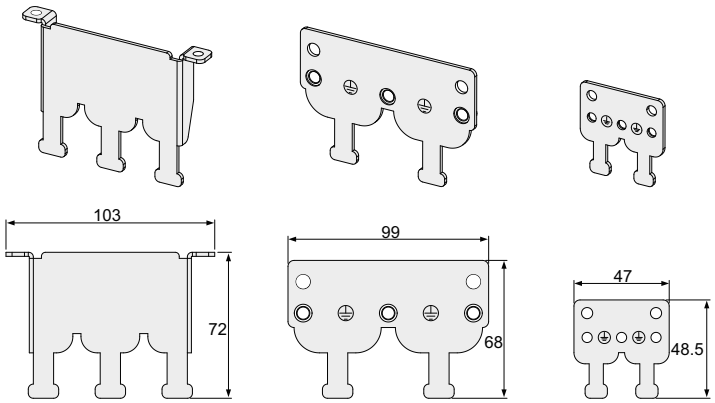

Figure 11-4 Dimensions of the shield bracket (unit: mm)

11.6 External LCD operating panel

The external LCD operating panel SOP-20-810 supports parameter copy, parameter modification, and programming functions. See the following figure for outline and mounting dimensions.

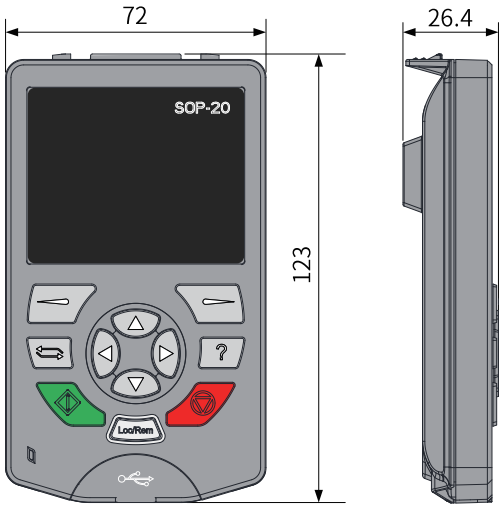

Figure 11-5 Outline dimensions of the external LCD operating panel (unit: mm)

11.7 Instructions for Braking Component Model Selection

11.7.1 Selecting the Resistance of the Braking Resistor

During braking, almost all regenerative energy of the motor is consumed by the braking resistor. The resistance of the braking resistor can be calculated using the following formula:

$$U \times U/R = Pb$$

Where:

- U - Braking voltage at stable system braking condition. (The value of U varies with the systems. The default braking voltage of ES810 series rectifier unit is 760 VDC, which can be adjusted via F9-08.)
- Pb: Braking power

11.7.2 Braking Resistor Power Selection

In theory, the power of the braking resistor is the same as the braking power. However, given the derating coefficient K, the power of the braking resistor is calculated by the following formula:

$$K \times Pr = Pb \times D$$

, in which

- K = about 50%
- Pr = Power of the braking resistor
- D = Braking frequency, that is, percentage of the regenerative process to the whole working process.

Therefore,

$$K \times Pr = Pb \times D = U \times U/R \times DPr = (U \times U \times D)/(R \times K);$$

$$Pr = (U \times U \times D)/(R \times K)$$

You can calculate the power of the braking resistor using this formula.

K is the derating factor of the braking resistor. A small K value ensures that the braking resistor does not overheat. You can increase the value of K properly under the condition that the cooling condition of the braking resistor is good. However, keep the value of K to a value lower than 50% to avoid the risk of fire caused by overtemperature of the resistor.

The braking frequency D is determined based on actual applications. The following table lists the typical values in common applications.

Table 11–2 Braking frequency

Common application scenarios	Elevator	Unwinding and winding	Centrifuge	Occasional braking load	General scenario
Braking frequency value	20% to 30%	20% to 30%	50% to 60%	5%	10%

11.7.3 Braking Component Model Selection

Rectifier unit model	Applicable motor (kW)	Braking unit		125% braking torque (10% ED, Max. 10s)		Remarks	Minimum braking resistance (Ω)
		Model	Quantity	Specifications of the recommended braking resistor	Quantity of braking resistors		
ES810-20M4T56-10	22	Built-in		4 kW 32 Ω	1	-	24
ES810-20M4T110-10	45	Built-in		9 kW 13 Ω	1	-	12.8
ES810-20M4T240-00	110	MDBUN-60-T	2	11 kW, 9.4 Ω	2	Input voltage ≤ 440 VAC	9.3 x 2
	110	MDBUN-60-5T	2	11 kW 10.5 Ω	2	Input voltage > 440 VAC	10.5 x 2
ES810-20M4T358-00	160	MDBUN-90-T	2	16 kW 6.3 Ω	2	Input voltage ≤ 440 VAC	6.2 x 2
	160	MDBUN-90-5T	2	16 kW 7.2 Ω	2	Input voltage > 440 VAC	7.0 x 2

11.7.4 Outline and Mounting Dimensions of the Braking Unit

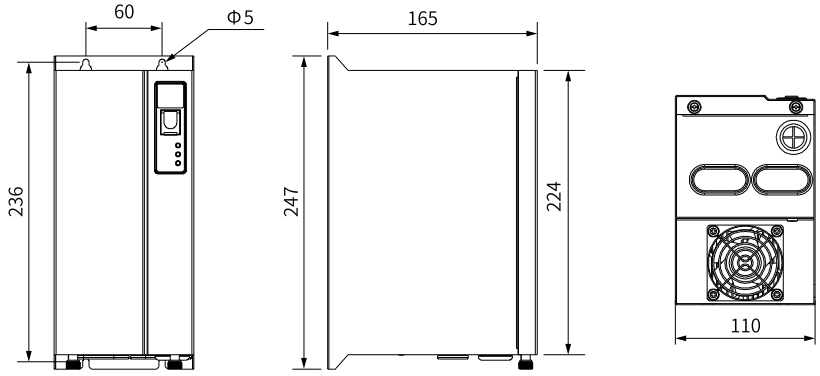

Figure 11-6 Outline dimensions of MDBUN series braking unit (mm)

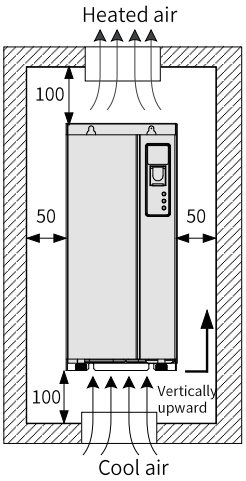

Figure 11-7 Mounting dimensions of MDBUN series braking unit (mm)

Note

- For details on how to install and use the MDBUN, see *MDBUN Series Braking Unit User Guide*.

11.7.5 Outline and Mounting Dimensions of the Regenerative Unit

The active front end (AFE) is an optional unit used to feed the energy generated by the motor during braking back to the grid, which removes the use of the braking unit and braking resistor and reduces heat emission. Inovance AFE units are featured with energy saving, low noise, low harmonics pollution, and high power factor.

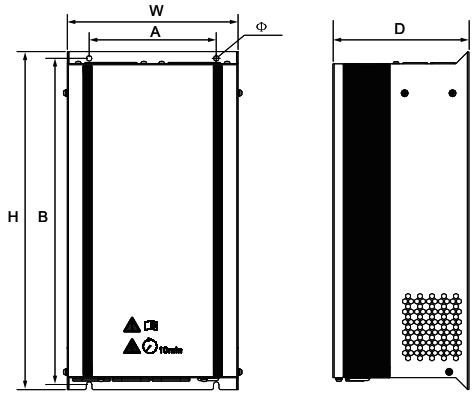

Figure 11-8 Dimensions of MD051 series AFE (unit: mm)

Table 11–3 Dimensions of MD051 series AFE

Model	Overall dimensions (mm)			Mounting hole (mm)		Hole diameter (mm)	Weight (kg)
	H	W	D	A	B		
MD051T5.5G	305	190	163	130	290	7.0	7.2
MD051T7.5G	305	190	163	130	290	7.0	7.2
MD051T11G	305	190	163	130	290	7.0	7.2
MD051T15G	425	215	174	160	410	7.0	13.2
MD051T18.5G	425	215	174	160	410	7.0	13.2
MD051T22G	490	260	200	160	475	7.0	19.6
MD051T30G	490	260	200	160	475	7.0	21.3

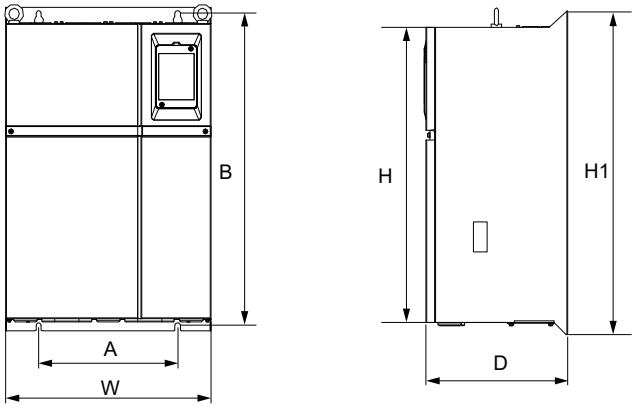

Figure 11-9 Outline dimensions of MD050 series AFE unit (unit: mm)

Table 11–4 Outline dimensions of MD050 series AFE unit

Model	Overall dimensions (mm)				Mounting hole (mm)		Hole diameter (mm)	Weight (kg)
	H	H1	W	D	A	B		
MD050-T37G	549	600	385	265	260	580	10	32
MD050-T45G								
MD050-T55G								
MD050-T75G	660	700	473	307	343	678	10	47
MD050-T90G								
MD050-T110G	880	930	579	380	449	903	10	90
MD050-T132G								
MD050-T160G								

Model	Overall dimensions (mm)				Mounting hole (mm)		Hole diameter (mm)	Weight (kg)
	H	H1	W	D	A	B		
MD050-T200G	983	1060	650	377	420	1030	12	130
MD050-T220G								
MD050-T250G								
MD050-T280G								
MD050-T315G	1203	1358	800	400	520	1300	14	200
MD050-T355G								
MD050-T400G								
MD050-T450G								

Note

- For installation and use of the energy regenerative unit, see *MD051 Series Active Front End (AFE) User Guide* or *MD050 Series Active Front End (AFE) User Guide*.
- MD050 and MD051 cannot be used with the rectifier unit.

11.8 Instructions for Peripheral Electrical Component Model Selection

11.8.1 Recommended AC Input Breakers and Contactors

Model	Input IEC Cable Specifications (mm^2)<1>	IEC grounding cable(mm^2)	Rectifier unit terminal width (mm)	Screw specification	Fuse (Bussmann, UL-compliant)		Contactor	Circuit breaker specifications
					Rated current (A)	Model	Rated current (A)	Rated current (A)
Three-phase 380–480 V, 50/60 Hz								
ES810-20M4T56-10	3 x 10	10	14	M6	100	FWH-100B	65	80
ES810-20M4T110-10	3 x 25	16	18	M6	150	FWH-150B	95	160
ES810-20M4T240-00	3 x 95	70	28	M10	325	FWH-325A	205	400
ES810-20M4T358-00	3 x 185	95	38	M12	500	FWH-500A	300	400

11.8.2 Instructions for Cable Lug Model Selection



GTNR series TNR series TNS series

Figure 11-10 Cable lugs manufactured by Suzhou Yuanli Metal Enterprise Co., Ltd.

Dimensions of TNR series cable lugs

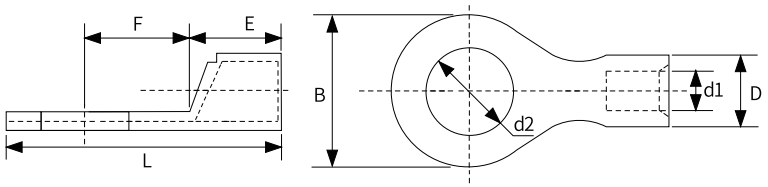

Figure 11-11 TNR series cable lug size

Table 11–5 Models and dimension of TNR series cable lugs (unit: mm)

Model	Cable range		D	d1	E	F	B	d2	L	Current (A)	Crimping tool
	AWG/MCM	mm^2									
TNR0.75-4	22 to 16	0.25 to 1.0	2.8	1.3	4.5	6.6	8.0	5.3	15	10	RYO-8
TNR1.25-4	22 to 16	0.25 to 1.65	3.4	1.7	4.5	7.3	8.0	5.3	15.8	19	AK-1M

GTNR series cable lugs

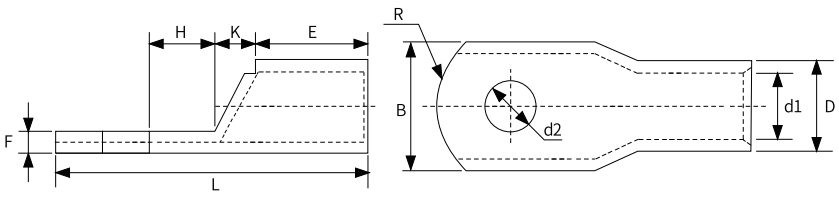

Figure 11-12 Dimensions of GTNR series cable lugs

Table 11–6 Models and dimensions of GTNR series cable lugs (unit: mm)

Model	D	d1	E	H	K	B	d2	F	L	R	Crimping tool
GTNR1.5-5	4.0	2.2	5.0	5.0	2.0	8.0	5.3	1.0	16.0	5.0	RYO-8 YYT-8 RYO-14
GTNR2.5-4	4.5	2.9	7.0	5.0	2.0	8.0	4.3	1.0	18.0		
GTNR2.5-5				6.0			5.3		20.0	7.0	
GTNR2.5-6						10.2	6.4	0.8			
GTNR4-5	5.2	3.6	7.0	6.0	2.0	10.0	5.3	1.0	20.0		
GTNR4-6							6.4				
GTNR6-5	6.0	4.2	9.0	6.0	3.0	10.0	5.3	1.2	23.0		
GTNR6-6				7.5			6.4		26.0		
GTNR6-8						12.0	8.4	1.0			
GTNR10-6	7.0	5.0	9.0	8.0	3.5	12.4	6.4	1.3	26.5		
GTNR10-8							8.4		27.5		
GTNR16-6	7.8	5.8	12.0	8.0	4.0	12.4	6.4	1.3	31.0		CT-38 CT-100
GTNR16-8							8.4				
GTNR25-6	9.5	7.5	12.0	8.0	4.5	14.0	6.4	2.0	32.0	10.0	
GTNR25-8				9.0		15.5	8.4	1.6	34.0		
GTNR25-10				10.5		17.5	10.5	1.4	37.0		
GTNR35-6	11.4	8.6	15.0	9.0	5.0	15.5	6.4	2.8	38.0		
GTNR35-8							8.4				
GTNR35-10				10.5		17.5	10.5	2.5	40.5		
GTNR50-8	12.6	9.6	16.0	11.0	6.0	18.0	8.4	2.8	43.5		CT-100
GTNR50-10							10.5				
GTNR70-8	15.0	12.0	18.0	13.0	7.0	21.0	8.4	2.8	50.0	14.0	
GTNR70-10							10.5				
GTNR70-12							13.0				
GTNR95-10	17.4	13.5	20.0	13.0	9.0	25.0	10.5	3.9	55.0		
GTNR95-12							13				
GTNR120-12	19.8	15.0	22.0	14.0	10.0	28.0	13.0	4.7	60.0	16.0	RYC-150
GTNR120-16				16.0			17.0		64.0		
GTNR150-12	21.2	16.5	26.0	16.0	11.0	30.0	13.0	4.7	69.0	24.0	
GTNR150-16							17.0				
GTNR185-16	23.5	18.5	32.0	17.0	12.0	34.0	17.0	5.0	78.0		
GTNR240-16	26.5	21.5	38.0	20.0	14.0	38.0	17.0	5.5	92.0		
GTNR240-20							21.0				

Dimensions of TNS series cable lugs

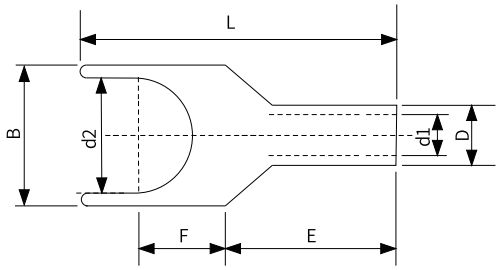

Figure 11-13 TNS series cable lug size

Table 11–7 Model and dimensions of TNS series cable lug (unit: mm)

Model	D	d1	E	H	k	B	d2	F	L	R	Crimping tool
TNS1.5-5	4.0	2.2	5.0	5.0	2.0	8.0	5.3	1.0	16.0	5.0	RYO-8 YYT-8 RYO-14
TNS2.5-4	4.5	2.9	7.0	5.0	2.0	8.0	4.3	1.0	18.0		
TNS2.5-5				6.0			5.3		20.0	7	
TNS2.5-6						10.2	6.4	1.0			
TNS4-5	5.2	3.6	7.0	6.0	2.0	10.0	5.3	1.0	20.0		
TNS4-6							6.4				
TNS6-5	6.0	4.2	9.0	6.0	3.0	10.0	5.3	1.2	23.0		
TNS6-6				7.5			6.4		26.0		
TNS6-8						12.0	8.4	1.0			
TNS10-6	7.0	5.0	9.0	8.0	3.5	12.4	6.4	1.3	26.5		
TNS10-8							8.4		27.5		
TNS16-6	7.8	5.8	12.0	8.0	4.0	12.4	6.4	1.3	31.0	7	
TNS16-8							8.4				
TNS25-6	9.5	7.5	12.0	8.0	4.5	14.0	6.4	2.0	32.0	10	CT-38 CT-100
TNS25-8				9.0		15.5	8.4	1.6	34.0		
TNS25-10				10.5		17.5	10.5	1.4	37.0		
TNS35-6	11.4	8.6	15.0	9.0	5.0	15.5	6.4	2.8	38.0		
TNS35-8							8.4				
TNS35-10				10.5		17.5	10.5	2.5	40.5		
TNS50-8	12.6	9.6	16.0	11.0	6.0	18.0	8.4	2.8	43.5		CT-100
TNS50-10							10.5				
TNS70-8	15.0	12.0	18.0	13.0	7.0	21.0	8.4	2.8	50.0	14	
TNS70-10							10.5				
TNS70-12							13.0				
TNS95-10	17.4	13.5	20.0	13.0	9.0	25.0	10.5	3.9	55.0		
TNS95-12							13.0				

Model	D	d1	E	H	k	B	d2	F	L	R	Crimping tool
TNS120-12	19.8	15.0	22.0	14.0	10.0	28.0	13.0	4.7	60.0	16	RYC-150
TNS120-16				16.0			17.0		64.0		
TNS150-12	21.2	16.5	26.0	16.0	11.0	30.0	13.0	4.7	69.0	24	
TNS150-16							17.0				
TNS185-16	23.5	18.5	32.0	17.0	12.0	34.0	17.0	5.0	78.0		
TNS240-16	26.5	21.5	38.0	20.0	14.0	38.0	17.0	5.5	92.0		
TNS240-20							21.0				

11.8.3 Selection of the AC Input Reactor

An AC input reactor is an option used to reduce harmonics in the input current. Therefore, when the application has high requirements on harmonic suppression, install an AC reactor. For models above 200 G, ensure that the cabinet has sufficient space for installing the reactor. The following table lists the recommended manufacturers and models of input reactors.

Table 11–8 Recommended AC input reactor models

Rectifier unit model	AC input reactor model (Inovance)
ES810-20M4T56-10	MD-ACL-60-0.24-4T-2%
ES810-20M4T110-10	MD-ACL-120-0.12-4T-2%
ES810-20M4T240-00	MD-ACL-250-0.056-4T-2%
ES810-20M4T358-00	MD-ACL-330-0.042-4T-2%

Model description

Description of the AC input reactor model is shown in the following figure:

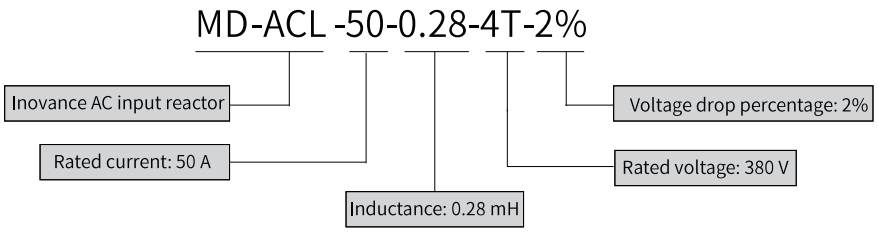

Figure 11-14 Description of AC input reactor model

Dimensions

- Dimensions of the AC input reactor (60 A)

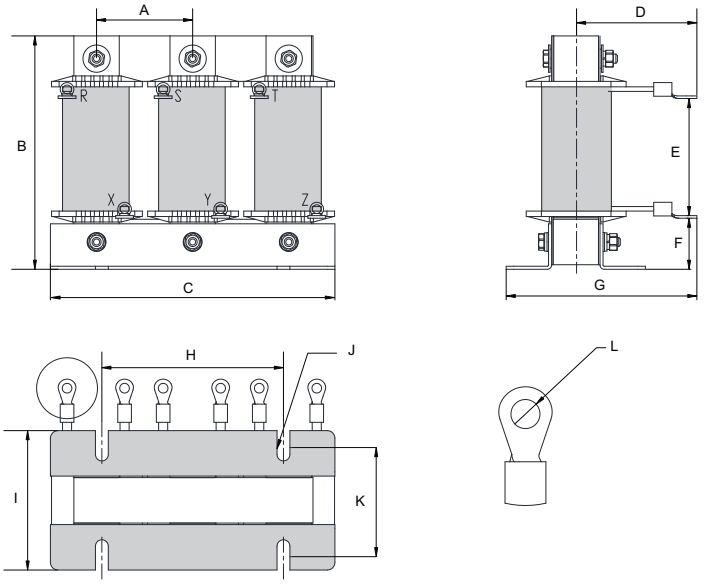

Table 11–9 Dimensions (unit: mm) of the AC input reactor (60 A)

Rated current (A)	A	B	C	D	E	F	G	H	I	J	K	L
60	64	160	195	80±10	75±5	35±5	135	120±1	92±2	Φ8.5 x 20	72±2	Φ6.4

- Dimensions of the AC input reactor (120 A)

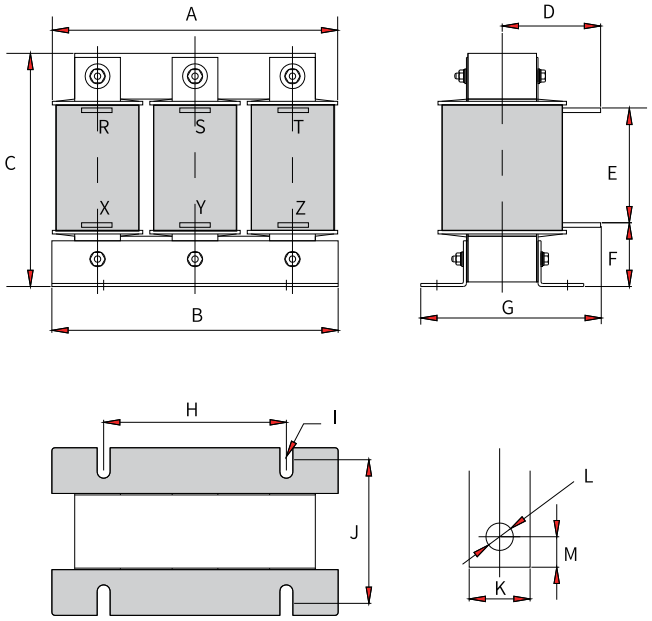

Figure 11-15 Dimensions of AC output reactor (120 A)

Table 11–10 Dimensions (unit: mm) of the AC input reactor (120 A)

Rated current (A)	A	B	C	D	E	F	G	H	I	J	K	L	M
120	195	188±1	160	78±10	79±5	40±5	135	120±1	Φ8.5 x 20	92±2	20	Φ9	10

- Dimensions of the AC input reactor (250 A/330 A)

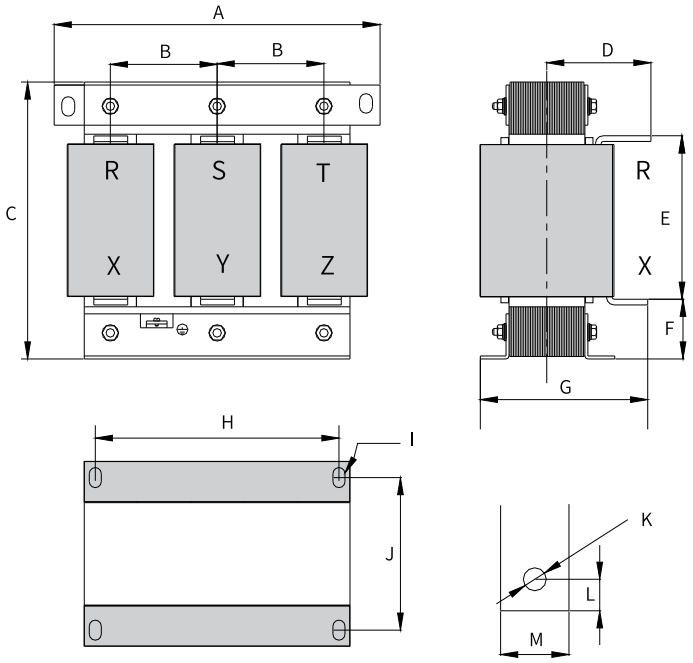

Figure 11-16 Dimensions of the AC input reactor (250 A/330 A)

Table 11–11 Dimensions (unit: mm) of the AC input reactor (250 A/330 A)

Rated current (A)	A	B	C	D	E	F	G	H	I	J	K	L	M
250	250	81±5	260	102±10	160±5	50±5	175	182±1	Φ11 x 18	96±2	Φ11	13	25
330	290	95±5	275	107±10	160±5	60±5	180	214±1	Φ11 x 18	100±2	ϕ12	15	30

- Dimensions of the AC input reactor (800 A)

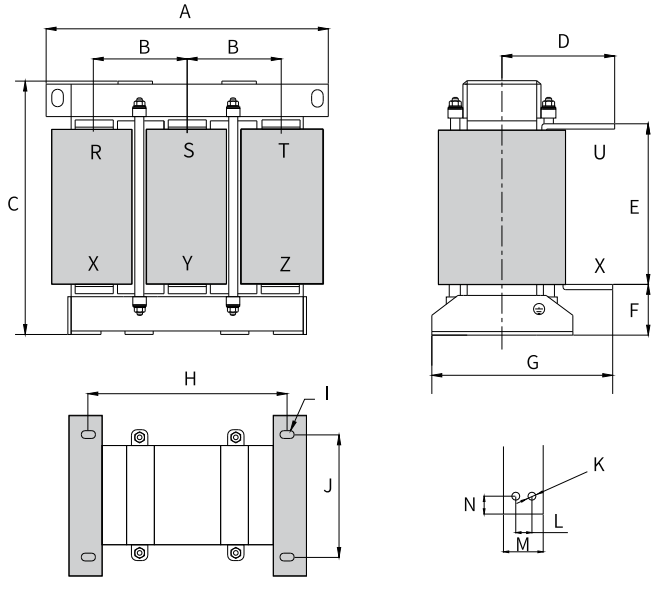

Figure 11-17 Dimensions of the AC input reactor (800 A)

Table 11–12 Dimensions (unit: mm) of the AC input reactor (800 A)

Rated current (A)	A	B	C	D	E	F	G	H	I	J	K	L	M	N
800	385	123±5	390	142±10	238±5	70±5	250	260±2	Φ12 x 20	175±1	ϕ12	22	50	23

11.8.4 Selection of the External EMC Filter

Standard EMC filter

The external EMC filter meets the EN 61800-3 C2 emission requirement of CE certification. Ground the filter properly and ensure that the length of the cable connecting the rectifier unit and filter is shorter than 30 cm.

Note

- The length of the cable connecting the rectifier unit and the filter must be shorter than 30 cm and as short as short possible. Meanwhile, ensure that the filter and rectifier unit are connected to the same grounding reference plane to achieve reliable grounding of the filter. Otherwise, the performance of the filter will be affected.
- The rectifier unit with the built-in filter capacitor conforms to European EMC directive 2014/30/ EU and the standard EN 61800-3 C3. It applies to the second environment.

Appearance

Table 11–13 EMC filter models and appearance

Filter model		Appearance
Schaffner	FN3258 series	
	FN3359 series	
Jianli	-	

Model selection

Schaffner and Jianli filters are recommended, as listed in the following table.

Table 11–14 Recommended manufacturers and models of EMC input filter

Rectifier unit model	External EMC filter model (Schaffner)	External EMC filter model (Jianli)
ES810-20M4T56-10	FN 3258-75-34	DL-65EBK5
ES810-20M4T110-10	FN 3258-100-35	DL-100EBK5
ES810-20M4T240-00	FN 3359-250-28	DL-250EBK5
ES810-20M4T358-00	FN 3270H-320-99	DL-400EBK3

Dimensions (Schaffner)

- Dimensions of FN 3258 series filters (50 A to 180 A)

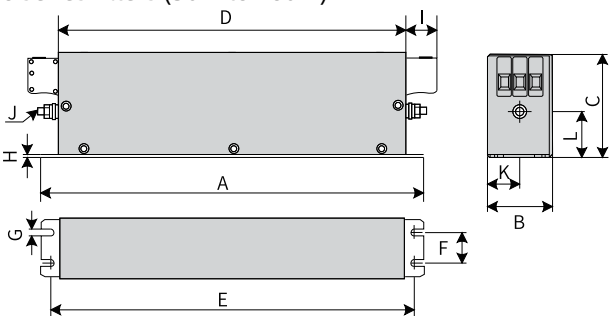

Figure 11-18 Dimensions of FN 3258 series filters (50 A to 180 A, unit: mm)

Table 11–15 Dimensions of FN 3258 series filters (50 A to 180 A, unit: mm)

Rated current (A)	A	B	C	D	E	F	G	H	I	J	K	L
7	190	40	70	160	180	20	4.5	1	22	M5	20	29.5
16	250	45	70	220	235	25	5.4	1	22	M5	22.5	29.5
30	270	50	85	240	255	30	5.4	1	25	M5	25	39.5
42	310	50	85	280	295	30	5.4	1	25	M6	25	37.5
55	250	85	90	220	235	60	5.4	1	39	M6	42.5	26.5
75	270	80	135	240	255	60	6.5	1.5	39	M6	40	70.5
100	270	90	150	240	255	65	6.5	1.5	45	M10	45	64
130	270	90	150	240	255	65	6.5	1.5	45	M10	45	64
180	380	120	170	350	365	102	6.5	1.5	51	M10	60	47

- Dimensions of FN 3359 series filters (150 A to 2500 A)

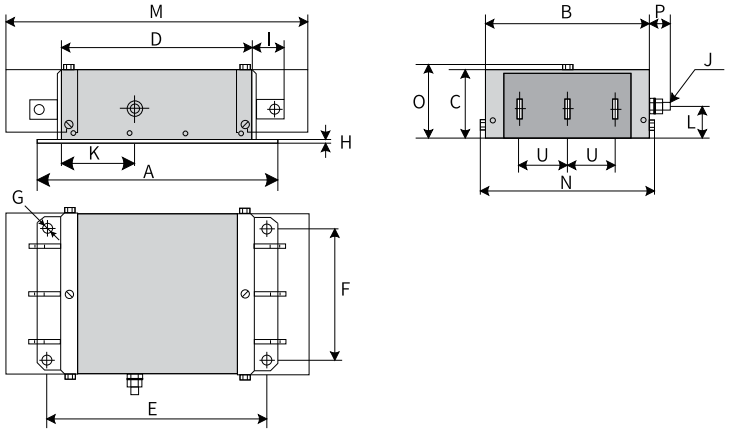

Figure 11-19 Dimensions (unit: mm) of FN 3359 series filters (150 A to 2500 A)

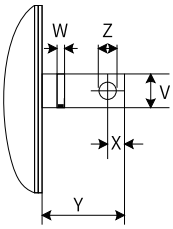

Figure 11-20 Dimensions of grounding copper busbar (unit: mm)

Table 11–16 Dimensions (unit: mm) of FN 3359 series filters (150 A to 2500 A)

Symbol	150 A	180 A	250 A	320 A	400 A	600 A	800 A	1000 A	1600 A	2500 A
A	300	300	300	300	300	300	350	350	400	600
B	210	210	230	260	260	260	280	280	300	370
C	120	120	125	115	115	135	170	170	160	200
D	160	160	180	210	210	210	230	230	250	300
E	120	120	120	120	120	120	145	145	170	250
F	185	185	205	235	235	235	255	255	275	330
G	ϕ12	ϕ12	ϕ12	ϕ12	ϕ12	ϕ12	ϕ12	ϕ12	ϕ12	ϕ14
H	2	2	2	2	2	2	3	3	3	3
I	33	33	33	43	43	43	53	53	93	98
J	M10	M10	M10	M12	M12	M12	M12	M12	M12	M16
K	55	55	62.5	20	20	20	25	25	25	25
L	30	30	35	20	20	20	25	25	25	25
M	420	420	420	440	440	440	510	510	-	-
N	171	171	191	221	221	221	241	241	-	-
O	127	127	132	122	122	142	177	177	-	-
S	-	-	-	-	-	-	-	-	26	35
T	-	-	-	-	-	-	-	-	26	35
U	50	50	55	60	60	60	60	60	60	100
V	-	-	-	25	25	25	40	40	60	70
W	-	-	-	6	6	8	8	8	10	15
X	-	-	-	15	15	15	20	20	17	20
Y	-	-	-	40	40	40	50	50	90	95
Z	-	-	-	ϕ10.5	ϕ10.5	ϕ10.5	ϕ14	ϕ14	ϕ14	ϕ14

Dimensions (Jianli)

- Dimensions of Jianli filters (50 A to 200 A):

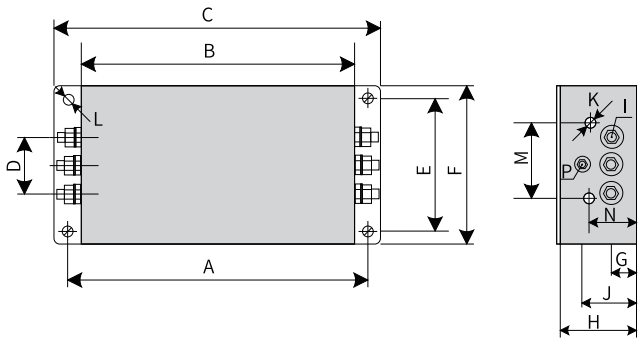

Figure 11-21 Dimensions (unit: mm) of Jianli filters (25 A to 200 A)

Table 11–17 Dimensions (unit: mm) of Jianli filters (50 A to 200 A)

Model	A	B	C	D	E	F	G	H	I	J	K	M	N	P	L
DL-25EBK5	243	224	265	58	70	102	25	92	M6	58	M4	74	49	M6	6.4x9.4
DL-35EBK5															
DL-50EBK5															
DL-65EBK5															
DL-80EBK5	354	323	388	66	155	188	30	92	M8	62	M4	86	56	M8	6.4x9.4
DL-100EBK5															
DL-130EBK5															
DL-160EBK5															
DL-200EBK5															

- Dimensions of Jianli filters (250 A to 800 A):

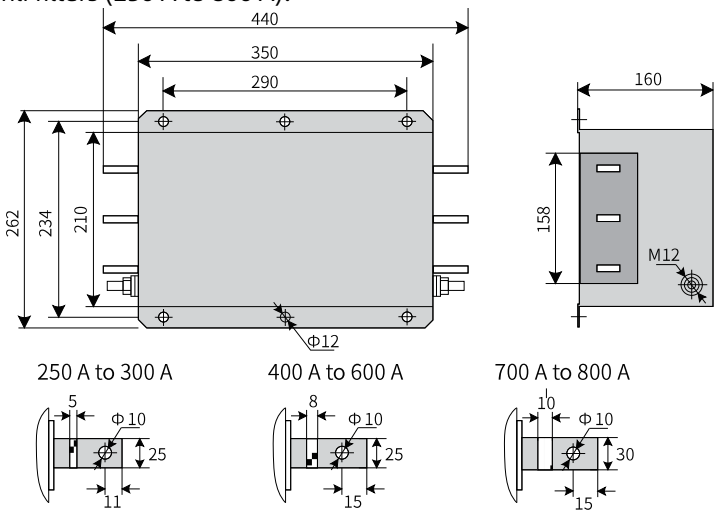

Figure 11-22 Dimensions (unit: mm) of Jianli filters (250 A to 800 A)

- Dimensions of Jianli series filters (1000 A)

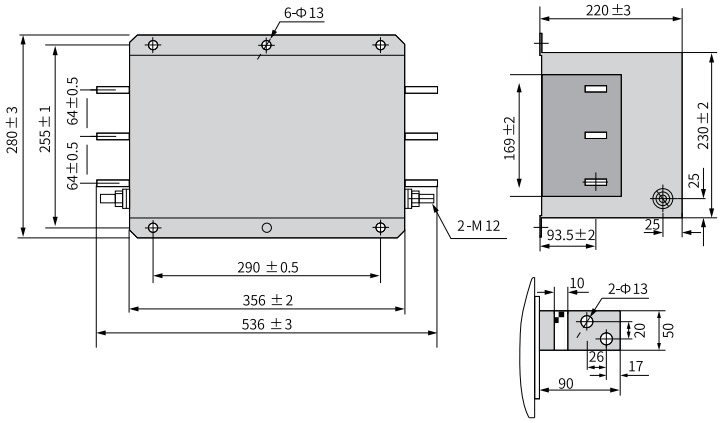

Figure 11-23 Dimensions (unit: mm) of Jianli series filters (1000 A)

Simple EMC input filter

A simple EMC input filter can effectively suppress the interference generated by the field and the rectifier unit during operation.

Ground the simple EMC filter properly and ensure that the length of the cable connecting the rectifier unit and the filter is shorter than 30 cm.

Dimensions

Rectifier unit model	Simple EMC AC input filter model
ES810-20M4T56-10	DL65EB1/10
ES810-20M4T110-10	DL-120EB1/10
ES810-20M4T240-00	-
ES810-20M4T358-00	-

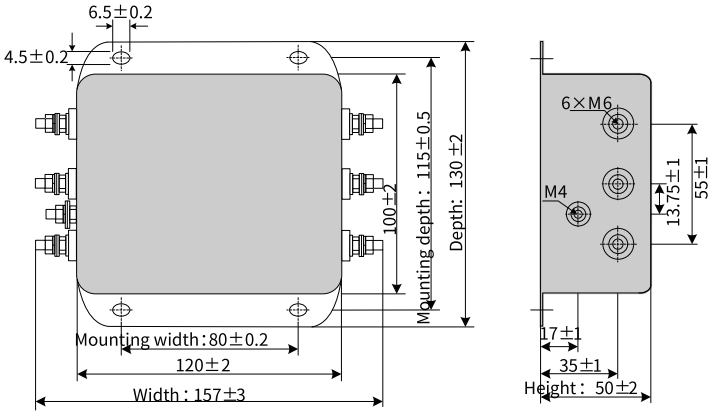

Figure 11-24 Outline dimensions of the simple filter (unit: mm)

Table 11–18 Overall and mounting dimensions of the simple EMC filter

Model	Dimensions (Width x Depth x Height in units of mm)	Mounting dimensions (With x Depth in units of mm)
DL-15EB1/10	157 x 130 x 50	80 x 115
DL-35EB1/10	218 x 140 x 80	184 x 112
DL-65EB1/10	218 x 140 x 80	184 x 112
DL-120EB1/10	334 x 185 x 90	304 x 155
DL-180EB1/10	388 x 220 x 100	354 x 190

12 Appendix A: Inverter Unit Parameters

12.1 Object Group 1000h

Index (hex)	Sub-index (hex)	Name	Access	PDO mapping	Data type	Unit	Data range	Default
1000	00	Drive type	RO	No	UINT32	-	-	0x00020192
1008	00	Drive name	RO	No	-	-	-	ES810-ECAT
1009	00	Hardware version	RO	No	-	-	-	Software version dependent
100 A	00	Software version	RO	No	-	-	-	Hardware version dependent
1018	ID object							
	00	Highest sub-index supported	RO	No	UINT8	-	-	0x04
	01	Vendor ID	RO	No	UINT32	-	-	0x00100000
	02	Product code	RO	No	UINT32	-	-	0x01190108
	03	Revision No.	RO	No	UINT32	-	-	0x00010001
1C00	Manufacturer software version							
	00	Number of Sync Manger channels	RO	No	UINT8	-	-	0x04
	01	Communica-tion type of SM0	RO	No	UINT8	-	-	0x01
	02	Communica-tion type of SM1	RO	No	UINT8	-	-	0x02
	03	Communica-tion type of SM2	RO	No	UINT8	-	-	0x03
	04	Communica-tion type of SM3	RO	No	UINT8	-	-	0x04

Index (hex)	Sub-index (hex)	Name	Access	PDO mapping	Data type	Unit	Data range	Default
1600	RPDO1 mapped object							
	00	Number of mapped objects in RPDO1	RW	No	UINT8	-	0 to 0x0A	0x05
	01	1st mapped object	RW	No	UINT32	-	0 to 0xFFFFFFFF	0x60400010
	02	2nd mapped object	RW	No	UINT32	-	0 to 0xFFFFFFFF	0x60600008
	03	3rd mapped object	RW	No	UINT32	-	0 to 0xFFFFFFFF	0x607A0020
	04	4th mapped object	RW	No	UINT32	-	0 to 0xFFFFFFFF	0x60B80010
	05	5th mapped object	RW	No	UINT32	-	0 to 0xFFFFFFFF	0x60FF0020
	06	6th mapped object	RW	No	UINT32	-	0 to 0xFFFFFFFF	
	07	7th mapped object	RW	No	UINT32	-	0 to 0xFFFFFFFF	-
	08	8th mapped object	RW	No	UINT32	-	0 to 0xFFFFFFFF	-
	09	9th mapped object	RW	No	UINT32	-	0 to 0xFFFFFFFF	-
	0 A	10th mapped object	RW	No	UINT32	-	0 to 0xFFFFFFFF	-

Index (hex)	Sub-index (hex)	Name	Access	PDO mapping	Data type	Unit	Data range	Default
1610	RPDO11 mapped object							
	00	Number of mapped objects in RPDO11	RW	No	UINT8	-	0 to 0x0A	0x05
	01	1st mapped object	RW	No	UINT32	-	0 to 0xFFFFFFFF	0x68400010
	02	2nd mapped object	RW	No	UINT32	-	0 to 0xFFFFFFFF	0x68600008
	03	3rd mapped object	RW	No	UINT32	-	0 to 0xFFFFFFFF	0x687A0020
	04	4th mapped object	RW	No	UINT32	-	0 to 0xFFFFFFFF	0x68B80010
	05	5th mapped object	RW	No	UINT32	-	0 to 0xFFFFFFFF	0x68FF0020
	06	6th mapped object	RW	No	UINT32	-	0 to 0xFFFFFFFF	
	07	7th mapped object	RW	No	UINT32	-	0 to 0xFFFFFFFF	-
	08	8th mapped object	RW	No	UINT32	-	0 to 0xFFFFFFFF	-
	09	9th mapped object	RW	No	UINT32	-	0 to 0xFFFFFFFF	-
	0 A	10th mapped object	RW	No	UINT32	-	0 to 0xFFFFFFFF	-

Index (hex)	Sub-index (hex)	Name	Access	PDO mapping	Data type	Unit	Data range	Default
1A00	TPDO1 mapped object							
	00	Number of mapped objects in TPDO1	RW	No	UINT8	-	0 to 0x0A	0x0A
	01	1st mapped object	RW	No	UINT32	-	0 to 0xFFFFFFFF	0x603F0010
	02	2nd mapped object	RW	No	UINT32	-	0 to 0xFFFFFFFF	0x60410010
	03	3rd mapped object	RW	No	UINT32	-	0 to 0xFFFFFFFF	0x60610008
	04	4th mapped object	RW	No	UINT32	-	0 to 0xFFFFFFFF	0x60640020
	05	5th mapped object	RW	No	UINT32	-	0 to 0xFFFFFFFF	0x606C0020
	06	6th mapped object	RW	No	UINT32	-	0 to 0xFFFFFFFF	0x60B90010
	07	7th mapped object	RW	No	UINT32	-	0 to 0xFFFFFFFF	0x60BA0020
	08	8th mapped object	RW	No	UINT32	-	0 to 0xFFFFFFFF	0x60BC0020
	09	9th mapped object	RW	No	UINT32	-	0 to 0xFFFFFFFF	0x60F40010
	0 A	10th mapped object	RW	No	UINT32	-	0 to 0xFFFFFFFF	0x60FD0010

Index (hex)	Sub-index (hex)	Name	Access	PDO mapping	Data type	Unit	Data range	Default
1A10	TPDO11 mapped object							
	00	Number of mapping objects in TPDO11	RW	No	UINT8	-	0 to 0x0A	0x0A
	01	1st mapped object	RW	No	UINT32	-	0 to 0xFFFFFFFF	0x683F0010
	02	2nd mapped object	RW	No	UINT32	-	0 to 0xFFFFFFFF	0x68410010
	03	3rd mapped object	RW	No	UINT32	-	0 to 0xFFFFFFFF	0x68610008
	04	4th mapped object	RW	No	UINT32	-	0 to 0xFFFFFFFF	0x68640020
	05	5th mapped object	RW	No	UINT32	-	0 to 0xFFFFFFFF	0x686C0020
	06	6th mapped object	RW	No	UINT32	-	0 to 0xFFFFFFFF	0x68B90010
	07	7th mapped object	RW	No	UINT32	-	0 to 0xFFFFFFFF	0x68BA0020
	08	8th mapped object	RW	No	UINT32	-	0 to 0xFFFFFFFF	0x68BC0020
	09	9th mapped object	RW	No	UINT32	-	0 to 0xFFFFFFFF	0x68F40010
	0 A	10th mapped object	RW	No	UINT32	-	0 to 0xFFFFFFFF	0x68FD0010
1C12	Sync Manager 2_RPDO assignment							
	00	Sync Manager 2_Highest sub-index assigned by RPDO	RW	No	UINT8	-	0 to 0x02	0x02
	01	Index of object 1 assigned to RPDO	RW	Yes	UINT16	-	0 to 0xFFFF	0x1600
	02	Index of object 2 assigned to RPDO	RW	Yes	UINT16	-	0 to 0xFFFF	0x1610
1C13	Sync Manager 2_TPDO assignment							
	00	Sync Manager 2_Highest sub-index supported	RW	No	UINT8	-	0 to 0x2	0x02
	01	Index of object 1 assigned to TPDO	RW	Yes	UINT16	-	0 to 0xFFFF	0x1A00
	02	Index of object 2 assigned to TPDO	RW	Yes	UINT16	-	0 to 0xFFFF	0x1A10

Index (hex)	Sub-index (hex)	Name	Access	PDO mapping	Data type	Unit	Data range	Default
1C32	Sync Manager 2 sync output parameter							
	00	Maximum number of sub-indexes for Sync Manager 2 sync parameters	RO	No	UINT8	-	-	0x20
	01	Sync type	RO	No	UINT16	-	-	0x0002
	02	Cycle time	RO	No	UINT32	ns	-	0
	04	Sync modes supported	RO	No	UINT16	-	-	0x0004
	05	Minimum cycle time	RO	No	UINT32	ns	-	0x0001E848
	06	Calculation and copy time	RO	No	UINT32	ns	-	-
	09	Delay time	RO	No	UINT32	ns	-	-
	20	Sync error	RO	No	BOOL	-	-	-
1C33	Sync Manager 2 sync input parameter							
	00	Maximum number of sub-indexes for Sync Manager 2 sync parameters	RO	No	UINT8	-	-	0x20
	01	Sync type	RO	No	UINT16		-	0x0002
	02	Cycle time	RO	No	UINT32	ns	-	0
	04	Sync modes supported	RO	No	UINT16	-	-	0x0004
	05	Minimum cycle time	RO	No	UINT32	ns	-	0x0001E848
	06	Calculation and copy time	RO	No	UINT32	ns	-	-
	09	Delay time	RO	No	UINT32	ns	-	-
	20	Sync error	RO	No	BOOL	-	-	-

12.2 Object Group 6000h

The object group 6000h includes objects related to the supported sub-protocol DSP 402.

Index (hex)	Sub-index (hex)	Name	Access	PDO mapping	Data type	Unit	Data range	Default	Change mode	Effective mode
603F	00	Error code	RO	TPDO	UINT16	-	-	-	-	-
6040	00	Control word	RW	RPDO	UINT16	-	0 to 0xFFFF	0	During operation	Real time

Index (hex)	Sub-index (hex)	Name	Access	PDO mapping	Data type	Unit	Data range	Default	Change mode	Effective mode
6041	00	Status word	RO	TPDO	UINT16	-	-	-	-	-
605A	00	Quick stop mode	RW	No	INT16	-	0 to 0x07	0x02	During operation	At stop
605C	00	Stop mode at S-ON OFF	RW	No	INT16	-	0 to 0x01	0	During operation	At stop
605D	00	Halt mode	RW	No	INT16	-	0x01 to 0x03	0x01	During operation	At stop
605E	00	Stop mode at No. 2 fault	RW	No	INT16	-	0 to 0x02	0x02	During operation	At stop
6060	00	Servo drive mode selection	RW	RPDO	INT8	-	0 to 0x0A	0	During operation	Real time
6061	00	Operation mode display	RO	TPDO	INT8	-	-	-	-	-
6062	00	Position reference	RO	TPDO	INT32	Reference unit	-	-	-	-
6063	00	Position feedback	RO	TPDO	INT32	Encoder unit	-	-	-	-
6064	00	Position feedback	RO	TPDO	INT32	Reference unit	-	-	-	-
6065	00	Following error window	RW	RPDO	UINT32	Reference unit	0 to 0xFFFFFFFF	0x00300000	During operation	Real time
6066	00	Following error time out	RW	RPDO	UINT32	ms	0 to 0xFFFF	0	During operation	Real time
6067	00	Position window	RW	RPDO	UINT32	Reference unit	0 to 0xFFFFFFFF	0x00000-2DE	During operation	Real time
6068	00	Position arrival window time	RW	RPDO	UINT16	ms	0 to 0xFFFF	0	During operation	Real time

Index (hex)	Sub-index (hex)	Name	Access	PDO mapping	Data type	Unit	Data range	Default	Change mode	Effective mode
606C	00	Actual speed	RO	TPDO	INT32	Reference unit/s	-	-	-	-
606D	00	Velocity window	RW	RPDO	UINT16	rpm	0 to 0xFFFF	0x0A	During operation	Real time
606E	00	Velocity window time	RW	RPDO	UINT16	ms	0 to 0xFFFF	0	During operation	Real time
606F	00	Velocity threshold	RW	RPDO	UINT16	rpm	0 to 0xFFFF	0x0A	During operation	Real time
6070	00	Velocity threshold time	RW	RPDO	UINT16	ms	0 to 0xFFFF	0	During operation	Real time
6071	00	Target torque	RW	RPDO	INT16	0.1%	0xF448 to 0x0BB8	0	During operation	Real time
6072	00	Maximum torque	RW	RPDO	UINT16	0.1%	0 to 0x0BB8	0x0BB8	During operation	Real time
6074	00	Torque demand value	RO	TPDO	INT16	0.1%	-	0	-	-
6077	00	Torque actual value	RO	TPDO	INT16	0.1%	-	0	-	-
607 A	00	Target position	RW	RPDO	INT32	Reference unit	0x80000000 to 0x7FFFFFFF	0	During operation	Real time
607C	00	Home offset	RW	RPDO	INT32	Reference unit	0x80000000 to 0x7FFFFFFF	0	During operation	Real time
607D	Software position limit									
	00	Highest sub-index supported	RO	No	UINT8	-	-	0x02	-	-
	01	Minimum position limit	RW	RPDO	INT32	Reference unit	0x80000000 to 0x7FFFFFFF	0x80000000	During operation	Real time
	02	Maximum position limit	RW	RPDO	INT32	Reference unit	0x80000000 to 0x7FFFFFFF	0x7FFFFFFF	During operation	Real time

Index (hex)	Sub-index (hex)	Name	Access	PDO mapping	Data type	Unit	Data range	Default	Change mode	Effective mode
607E	00	Reference polarity	RW	RPDO	UINT8	-	0 to 0xFF	0	During operation	Real time
607F	00	Maximum speed	RW	RPDO	UINT32	Reference unit/s	0 to 0xFFFFFFFF	0x06400000	During operation	Real time
6081	00	Profile velocity	RW	RPDO	UINT32	User-defined velocity unit	0 to 0xFFFFFFFF	0	During operation	Real time
6083	00	Profile acceleration	RW	RPDO	UINT32	Reference unit/s^2	0 to 0xFFFFFFFF	0x682AAAA6	During operation	Real time
6084	00	Profile deceleration	RW	RPDO	UINT32	Reference unit/s^2	0 to 0xFFFFFFFF	0x682AAAA6	During operation	Real time
6085	00	Quick stop deceleration	RW	RPDO	UINT32	User-defined acceleration unit	0 to 0xFFFFFFFF	0xAD9C71C0	During operation	Real time
6086	00	Motion profile type	RW	RPDO	INT16	-	0x8000 to 0x7FFF	0	During operation	Real time
6087	00	Torque ramp	RW	RPDO	UINT32	0.1%/s	0 to 0xFFFFFFFF	0xFFFFFFFF	During operation	Real time
6091	Gear ratio									
	00	Highest sub-index supported	RO	No	UINT8	Uint8	-	0x02	-	-
	01	Motor resolution	RW	RPDO	UINT32	-	0 to 0xFFFFFFFF	20-bit encoder: 1; 23-bit encoder: 8	During operation	Real time
	02	Load shaft resolution	RW	RPDO	UINT32	-	1 to 0xFFFFFFFF	1	During operation	Real time

Index (hex)	Sub-index (hex)	Name	Access	PDO mapping	Data type	Unit	Data range	Default	Change mode	Effective mode
6098	00	Homing method	RW	RPDO	INT8	-	0x01 to 0x023	0x01	During operation	Real time
6099	Homing speed									
	00	Highest sub-index supported	RO	No	Uint8	-	-	0x02	-	-
	01	Speed during search for switch	RW	RPDO	UINT32	Reference unit/s	0 to 0xFFFFFFFF	0x001A-AAAB	During operation	Real time
	02	Speed during search for zero	RW	RPDO	UINT32	Reference unit/s	10 to 0xFFFFFFFF	0x0002-AAAB	During operation	Real time
609 A	00	Homing acceleration	RW	RPDO	UINT32	Reference unit/s^2	0 to 0xFFFFFFFF	0x682A-AAA6	During operation	Real time
60B0h	00	Position offset	RW	RPDO	INT32	Reference unit	0x80000000 to 0x7FFFFFFF	0	During operation	Real time
60B1h	00	Speed offset	RW	RPDO	INT32	Reference unit/s	0x80000000 to 0x7FFFFFFF	0	During operation	Real time
60B2h	00	Torque offset	RW	RPDO	INT16	0.1%	0xF448 to 0x0BB8	0	During operation	Real time
60E0h	00	Positive torque limit	RW	RPDO	UINT16	0.1%	0 to 0x0BB8	0x0BB8	During operation	Real time
60E1h	00	Negative torque limit	RW	RPDO	UINT16	0.1%	0 to 0x0BB8	0x0BB8	During operation	Real time

Index (hex)	Sub-index (hex)	Name	Access	PDO mapping	Data type	Unit	Data range	Default	Change mode	Effective mode
60E3h	Supported homing methods									
	00	Number of sub-indexes for supported homing method	RO	No	UINT8	-	-	0x1F	-	-
	01	1st supported homing method	RO	No	UINT16	-	-	0x0301	-	-
	02	2nd supported homing method	RO	No	UINT16	-	-	0x0302	-	-
	03	3rd supported homing method	RO	No	UINT16	-	-	0x0303	-	-
	04	4th supported homing method	RO	No	UINT16	-	-	0x0304	-	-
	05	5th supported homing method	RO	No	UINT16	-	-	0x0305	-	-
	06	6th supported homing method	RO	No	UINT16	-	-	0x0306	-	-
	07	7th supported homing method	RO	No	UINT16	-	-	0x0307	-	-
	08	8th supported homing method	RO	No	UINT16	-	-	0x0308	-	-
	09	9th supported homing method	RO	No	UINT16	-	-	0x0309	-	-
	0A	10th supported homing method	RO	No	UINT16	-	-	0x030A	-	-
	0B	11th supported homing method	RO	No	UINT16	-	-	0x030B	-	-

Index (hex)	Sub-index (hex)	Name	Access	PDO mapping	Data type	Unit	Data range	Default	Change mode	Effective mode
60E3h	0C	12th supported homing method	RO	No	UINT16	-	-	0x030C	-	-
	0D	13th supported homing method	RO	No	UINT16	-	-	0x030D	-	-
	0E	14th supported homing method	RO	No	UINT16	-	-	0x030E	-	-
	0F	15th supported homing method	RO	No	UINT16	-	-	0x030Fh	-	-
	10	16th supported homing method	RO	No	UINT16	-	-	0x0310	-	-
	11	17th supported homing method	RO	No	UINT16	-	-	0x0311	-	-
	12	18th supported homing method	RO	No	UINT16	-	-	0x0312	-	-
	13	19th supported homing method	RO	No	UINT16	-	-	0x0313	-	-
	14	20th supported homing method	RO	No	UINT16	-	-	0x0314	-	-
	15	21th supported homing method	RO	No	UINT16	-	-	0x0315	-	-
	16	22nd supported homing method	RO	No	UINT16	-	-	0x0316	-	-
	17	23rd supported homing method	RO	No	UINT16	-	-	0x0317	-	-

60E3h	18	24th supported homing method	RO	No	UINT16	-	-	0x0318	-	-
	19	25th supported homing method	RO	No	UINT16	-	-	0x0319	-	-
	1 A	26th supported homing method	RO	No	UINT16	-	-	0x031A	-	-
	1B	27th supported homing method	RO	No	UINT16	-	-	0x031B	-	-
	1C	28th supported homing method	RO	No	UINT16	-	-	0x031C	-	-
	1D	29th supported homing method	RO	No	UINT16	-	-	0x031D	-	-
	1E	30th supported homing method	RO	No	UINT16	-	-	0x031E	-	-
	1F	31th supported homing method	RO	No	UINT16	-	-	0x031F	-	-
60E6h	00	Actual position calculation method	RW	No	UINT16	-	0 to 1	0	During operation	Real time
60F4h	00	Position deviation	RO	RPDO	INT32	Reference unit	-	-	-	-
60FCh	00	Position reference	RO	TPDO	INT32	Encoder unit	-	-	-	-
60FDh	00	DI state	RO	RPDO	UINT32	-	-	-	-	-
60FEh	Digital output									
	00	DO state	RO	No	UINT8	-	-	0x02	-	-
	01	Physical output	RW	RPDO	UINT32	-	0 to 0xFFFFFFFF	0	During operation	Real time
	02	Physical output selection	RW	No	UINT32	-	0 to 0xFFFFFFFF	0	During operation	Real time

60FFh	00	Target speed	RW	RPDO	INT32	Reference unit/s	0x80000000 to 0x7FFFFFFF	0	During operation	Real time
6502h	00	Supported drive modes	RO	No	UINT32	-	-	0x00000-3AD	-	-

12.3 Object Group 2000h

12.3.1 H00 Servo Motor Parameters

Index code (decimal)	Param.	Function	Value range	Default	Unit	Change method	Effective mode
1	H00-00	Motor code	-	14101	-	At stop	Next power-on
3	H00-02	Custom code	-	0.00	-	Read-only	-
5	H00-04	Encoder version	-	0.0	-	Read-only	-
6	H00-05	Bus motor code	-	0	-	Read-only	-
7	H00-06	Custom FPGA code	-	0.00	-	Read-only	-
9	H00-08	Bus encoder type	-	0	-	At stop	Next power-on
10	H00-09	Rated voltage	• 0: 220 V • 1: 380 V	0	-	At stop	Next power-on
11	H00-10	Rated power	-	0.75	kW	At stop	Next power-on
12	H00-11	Rated current	-	4.70	A	At stop	Next power-on
13	H00-12	Rated torque	-	2.39	N·m	At stop	Next power-on
14	H00-13	Maximum torque	-	7.16	N·m	At stop	Next power-on
15	H00-14	Rated speed	-	3000	rpm	At stop	Next power-on
16	H00-15	Maximum speed	-	6000	rpm	At stop	Next power-on
17	H00-16	Moment of inertia	-	1.30	kg·cm^2	At stop	Next power-on
18	H00-17	Number of PMSM pole pairs	-	4	-	At stop	Next power-on
19	H00-18	Stator resistance	-	0.500	Ω	At stop	Next power-on
20	H00-19	Stator inductance Lq	-	3.27	mH	At stop	Next power-on
21	H00-20	Stator inductance Ld	-	3.87	mH	At stop	Next power-on

Index code (decimal)	Param.	Function	Value range	Default	Unit	Change method	Effective mode
22	H00-21	Linear back EMF factor	-	33.30	mV/rpm	At stop	Next power-on
23	H00-22	Torque coefficient Kt	-	0.51	N·m/Arms	At stop	Next power-on
24	H00-23	Electrical constant Te	-	6.54	ms	At stop	Next power-on
25	H00-24	Mechanical constant Tm	-	0.24	ms	At stop	Next power-on
29	H00-28	Absolute encoder position offset	-	8192	-	At stop	Next power-on
31	H00-30	Encoder selection (hex)	• 19: 0x13 - Inovance encoder • 18: 0x12 - Nikon encoder • 32: 0x20 - Resolver encoder	19	-	At stop	Next power-on
32	H00-31	Encoder pulses per revolution	-	8388608	-	At stop	Next power-on
34	H00-33	Electrical angle of Z signal	-	180.0	°	Read-only	-
44	H00-43	TAMAGAWA type selection	-	-	-	At stop	Real time
59	H00-58	Number of resolver pole pairs	-	1	-	At stop	Real time

12.3.2 H01 Drive Parameters

Index code (decimal)	Param.	Function	Value range	Default	Unit	Change method	Effective mode
1	H01-00	MCU software version	-	0.0	-	Read-only	-
2	H01-01	FPGA software version	-	0.0	-	Read-only	-
3	H01-02	Servo drive series No.	-	10008	-	At stop	Next power-on
6	H01-05	Rated power of the inverter	-	0.75	kW	Read-only	-
7	H01-06	Maximum output power of the inverter	-	0.75	kW	Read-only	-
8	H01-07	Rated output current of the inverter	-	5.50	A	Read-only	-
9	H01-08	Maximum output current of the inverter	-	16.90	A	Read-only	-
11	H01-10	Carrier frequency	-	4000	-	At stop	Next power-on

Index code (decimal)	Param.	Function	Value range	Default	Unit	Change method	Effective mode
12	H01-11	Current loop modulation frequency	• 0: Carrier frequency • 1: 2 x carrier frequency	1	-	At stop	Next power-on
13	H01-12	Speed loop scheduling frequency-division factor	• 1: Current loop frequency • 2: Current loop modulation frequency/2 • 4: Current loop modulation frequency/4 • 8: Current loop modulation frequency/8 • 16: Current loop modulation frequency/16 • 32: Current loop modulation frequency/32	1	-	At stop	Next power-on
14	H01-13	Position loop scheduling frequency-division factor	• 1: Current loop frequency • 2: Current loop modulation frequency/2 • 4: Current loop modulation frequency/4 • 8: Current loop modulation frequency/8 • 16: Current loop modulation frequency/16 • 32: Current loop modulation frequency/32	4	-	At stop	Next power-on
16	H01-15	DC bus overvoltage protection threshold	-	420	V	Read-only	-
17	H01-17	DC bus undervoltage threshold	-	350	V	At stop	Next power-on
19	H01-18	Servo drive overcurrent protection threshold	-	100	A	At stop	Next power-on
23	H01-22	d-axis back EMF compensation factor	-	60.0	%	Real time	Real time

Index code (decimal)	Param.	Function	Value range	Default	Unit	Change method	Effective mode
24	H01-23	q-axis back EMF compensation factor	-	100.0	%	Real time	Real time
25	H01-24	d-axis current loop proportional gain	-	1000	-	Real time	Real time
26	H01-25	d-axis current loop integral compensation factor	-	2.00	-	Real time	Real time
28	H01-27	q-axis current loop proportional gain	-	1000	-	Real time	Real time
29	H01-28	q-axis current loop integral compensation factor	-	1.00	-	Real time	Real time
36	H01-35	Local mode selection	• 0: Non-local mode • 1: Local mode	0	-	At stop	Real time
37	H01-36	Torque limit enable upon high overload factor	• 0: Inactive • 1: Active	1	-	At stop	Real time
44	H01-43	Torque limit enable upon overvoltage (overvoltage suppression)	• 0: Inactive • 1: Active	1	-	At stop	Real time
48	H01-47	MCU current reference processing time	Upper limit: 95.00	75.00	ms	At stop	Next power-on
51	H01-50	Internal version of MCU software	-	0.00	-	Read-only	-
52	H01-51	Interval version of FPGA software	-	0.00	-	Read-only	-
53	H01-52	d-axis proportional gain in performance priority mode	-	2000	-	Real time	Real time
54	H01-53	d-axis integral gain in performance priority mode	-	2.00	-	Real time	Real time
55	H01-54	q-axis proportional gain in performance priority mode	-	2000	-	Real time	Real time
56	H01-55	q-axis integral gain in performance priority mode	-	1.00	-	Real time	Real time
69	H01-68	Voltage threshold for enabling torque limit upon overvoltage	-	780.0	-	At stop	Real time

12.3.3 H02 Basic Control Parameters

Index code (decimal)	Param.	Function	Value range	Default	Unit	Change method	Effective mode
1	H02-00	Control mode selection	• 0: Speed control mode • 2: Torque control mode • 9: EtherCAT mode	9	-	At stop	Real time
2	H02-01	Absolute system selection	• 0: Incremental mode • 1: Absolute position linear mode • 2: Absolute position rotation mode	1	-	Read-only	-
3	H02-02	Direction of rotation	• 0: CCW as the forward direction • 1: CW as the forward direction	0	-	At stop	Real time
4	H02-03	Output pulse phase	• 0: Phase A leads phase B • 1: Phase A lags behind phase B	0	-	At stop	Next power-on
6	H02-05	Stop mode at S-ON OFF	• 0: Coast to stop, keeping de-energized state • 1: Stop at zero speed, keeping de-energized state • 2: Speed+Torque ramp to stop, keeping de-energized status • 3: Internal dynamic braking stop, keeping dynamic braking status • 4: Speed+Torque ramp to stop, keeping de-energized status	3	-	At stop	Real time

Index code (decimal)	Param.	Function	Value range	Default	Unit	Change method	Effective mode
7	H02-06	Stop mode at No. 2 fault	• 0: Coast to stop, keeping de-energized status • 1: External dynamic braking stop, keeping de-energized status after stop • 2: External dynamic braking stop, keeping dynamic braking state after stop • 3: Internal dynamic braking stop, keeping de-energized status after stop • 4: Internal dynamic braking stop, keeping dynamic braking state after stop • 5: Stop at zero speed, keeping de-energized status after stop • 6: Stop at zero speed, keeping position lock status after stop • 7: Speed ramp to stop, keeping de-energized status after stop • 8: Speed ramp to stop, keeping position lock status after stop	0	-	Read-only	-
8	H02-07	Stop mode at overtravel	• 0: Coast to stop, keeping de-energized state • 1: Stop at zero speed, keeping position lock state • 2: Stop at zero speed, keeping de-energized state	1	-	At stop	Real time

Index code (decimal)	Param.	Function	Value range	Default	Unit	Change method	Effective mode
9	H02-08	Stop mode at No. 1 fault	• 0: Coast to stop, keeping de-energized status • 1: External dynamic braking stop, keeping de-energized status after stop • 2: External dynamic braking stop, keeping dynamic braking state after stop • 3: Internal dynamic braking stop, keeping de-energized status after stop • 4: Internal dynamic braking stop, keeping dynamic braking state after stop • 5: Stop at zero speed, keeping de-energized status after stop • 6: Stop at zero speed, keeping position lock status after stop • 7: Speed ramp to stop, keeping de-energized status after stop • 8: Speed ramp to stop, keeping position lock status after stop	0	-	Read-only	-
10	H02-09	Delay from brake output ON to command received	-	250	ms	Real time	Real time
11	H02-10	Delay from brake output OFF to motor de-energized in standstill state	-	150	ms	Real time	Real time
12	H02-11	Motor speed threshold at brake output OFF in rotation state	-	30	rpm	Real time	Real time

Index code (decimal)	Param.	Function	Value range	Default	Unit	Change method	Effective mode
13	H02-12	Delay from S-ON off to brake output off in rotation state	-	500	-	Real time	Real time
15	H02-14	Switchover speed of stop mode and stop state	-	10	-	At stop	Real time
16	H02-15	Alarm display on the LED	• 0: Output alarm information immediately • 1: Not output alarm information	0	-	At stop	Real time
21	H02-20	Stop mode enable switch at fault	• 0: Coast to stop, the stop mode set in group H0E not used • 1: Stop according to the stop mode set in group H0E	1	-	Real time	Real time
32	H02-31	System parameter initialization	• 0: Inactive • 1: Restore default values • 2: Clear fault log	0	-	At stop	Real time
42	H02-41	Manufacturer password	-	0	-	Real time	Real time
43	H02-42	Motor temperature sensor selection	• 0: Inactive • 1: KTY • 2: PT1000 • 3: PT100	0	-	Real time	Real time
44	H02-43	Motor temperature alarm upper limit	-	90	°C	Real time	Real time
45	H02-44	Motor temperature alarm lower limit	-	0	°C	Real time	Real time
46	H02-45	PTC temperature alarm switch	• 0: Inactive • 1: Active	0	-	Real time	Real time
47	H02-46	Forced startup of the fan (used for fan testing)	-	0	-	Real time	Real time
48	H02-47	Forced disable of NTC error (used for NTC testing)	-	0	-	Real time	Real time

12.3.4 H03 Terminal Input Parameters

Table 12–1 H03 Terminal input parameter setting range

No.	Definition
0	No assignment
1	S-ON enable

No.	Definition
2	Alarm signal reset
3	Gain switchover switch
12	Zero clamp enable signal
13	Position reference inhibited
14	Positive limit switch
15	Negative limit switch
16	Positive external torque limit
17	Negative external torque limit
18	Forward jog
19	Reverse jog
25	Torque reference direction
26	Speed reference direction
27	Position reference direction
31	Home switch
32	Homing enable
34	Emergency stop
35	Position deviation clear
36	Internal speed limit source
37	Pulse reference inhibited
38	Probe 1
39	Probe 2
40	Master/Slave pump configuration 1
41	Master/Slave pump configuration 2
42	Permissible S-ON DO output
43	The brake returns a reception signal, and BrakeErrDiTime is not 0.
44	DI-to-pressure-holding enable
45	Braking unit state 5
46	Rectifier power down signal

Index code (decimal)	Param.	Function	Value range	Default	Unit	Change method	Effective mode
3	H03-02	DI1 function selection	See *"Table 12-1" on page 293*.	14	-	Real time	Real time
4	H03-03	DI1 logic selection	• 0: Active low • 1: Active high • 2: Active on rising edge • 3: Active on falling edge • 4: Active on rising/ falling edge	0	-	Real time	Real time
5	H03-04	DI2 function selection	See *"Table 12-1" on page 293*.	14	-	Real time	Real time

Index code (decimal)	Param.	Function	Value range	Default	Unit	Change method	Effective mode
6	H03-05	DI2 logic selection	• 0: Active low • 1: Active high • 2: Active on rising edge • 3: Active on falling edge • 4: Active on rising/ falling edge	0	-	Real time	Real time
7	H03-06	DI3 function selection	See *"Table 12-1" on page 293*.	14	-	Real time	Real time
8	H03-07	DI3 logic selection	• 0: Active low • 1: Active high • 2: Active on rising edge • 3: Active on falling edge • 4: Active on rising/ falling edge	0	-	Real time	Real time
9	H03-08	DI4 function selection	See *"Table 12-1" on page 293*.	14	-	Real time	Real time
10	H03-09	DI4 logic selection	• 0: Active low • 1: Active high • 2: Active on rising edge • 3: Active on falling edge • 4: Active on rising/ falling edge	0	-	Real time	Real time
11	H03-10	DI5 function selection	See *"Table 12-1" on page 293*.	14	-	Real time	Real time
12	H03-11	DI5 logic selection	• 0: Active low • 1: Active high • 2: Active on rising edge • 3: Active on falling edge • 4: Active on rising/ falling edge	0	-	Real time	Real time
37	H03-36	DI/DO function selection	• 0: DI5 input selected for DIO • 1: DO3 output selected for DIO	0	-	Real time	Real time

Index code (decimal)	Param.	Function	Value range	Default	Unit	Change method	Effective mode
38	H03-37	STO alarm reset	• 0: STO alarm reset manually • 1: STO alarm reset automatically • 2: 300.0 reported in RUN state, manual reset; 300.1 reported in RDY state, automatic reset • 3: Fault reported in RUN state, alarm reported in RDY state • 4: Zero speed (speed feedback lower than 10 rpm): Disconnect two STO channels without alarm or disconnect one STO channel with alarm reported. Operating (speed feedback greater than 10 rpm): Alarm occurs when either one or two STO channels are disconnected. After the STO terminal is disconnected, the drive stops torque output no matter whether a fault is reported. The fault is reset automatically when the STO function is connected again.	0	-	Real time	Real time
41	H03-40	After brake DO output, if the DI is not received within the set time, fault 310 is reported. When H03-40 is set to 0, the alarm is disabled.	-	0	ms	Real time	Real time
51	H03-50	AI1 offset	-	0	mV	Real time	Real time
52	H03-51	AI1 input filter time constant	-	2.00	ms	Real time	Real time
54	H03-53	AI1 dead zone	-	10.0	mV	Real time	Real time
55	H03-54	AI1 zero drift	-	0.0	mV	Real time	Real time
56	H03-55	AI2 offset	-	0	mV	Real time	Real time
57	H03-56	AI2 input filter time constant	-	2.00	ms	Real time	Real time

Index code (decimal)	Param.	Function	Value range	Default	Unit	Change method	Effective mode
59	H03-58	AI2 dead zone	-	10.0	mV	Real time	Real time
60	H03-59	AI2 zero drift	-	0.0	mV	Real time	Real time
61	H03-60	AI3 offset	-	0	mV	Real time	Real time
62	H03-61	AI3 input filter time constant	-	2.00	ms	Real time	Real time
64	H03-63	AI3 dead zone	-	0.0	mV	Real time	Real time
65	H03-64	AI3 zero drift	-	0.0	mV	Real time	Real time
66	H03-65	AI3 - MODE input selection	• 0: Current type • 1: Voltage type	1	-	Real time	Real time
79	H03-78	Pressure sensor source selection	• 0: AI3 • 1: AI1	0	-	Real time	Real time
80	H03-79	AI3 range selection	• 0: 0 V to 10 V • 1: -10 V to +10 V, negative voltage detection supported	1	-	Real time	Next power-on
81	H03-80	Speed corresponding to analog 10 V	-	3000	rpm	At stop	Real time
82	H03-81	Torque corresponding to analog 10 V	-	1.00	%	At stop	Real time

12.3.5 H04 Terminal Output Parameters

Index code (decimal)	Param.	Function	Value range	Default	Unit	Change method	Effective mode
1	H04-00	DO1 function selection	• 0: Not defined • 1: Servo ready • 2: Motor rotation • 3: Zero speed signal • 4: Speed matching • 5: Positioning completed • 6: Proximity • 7: Torque limit • 8: Speed limit • 9: Braking • 10: Alarm • 11: Fault • 12: Output 3-bit alarm code • 13: Output 3-bit alarm code • 14: Output 3-bit alarm code • 15: Interrupt positioning completed • 16: Homing OK • 17: Electrical homing OK • 18: Torque reached • 19: Speed reached • 20: Initial angle auto-tuning completed • 21: Dynamic braking signal • 22: Motor fan ON • 26: STO status • 27: Relief valve control • 28: Fault delay output - used for STO • 29: Initialization completed • 30: S-ON DO allowed	22	-	Real time	Real time
2	H04-01	DO1 logic selection	• 0: Output low level (L) when active (optocoupler ON) • 1: Output high level (H) when active (optocoupler OFF)	0	-	Real time	Real time
3	H04-02	DO2 function selection	See H04-00.	22	-	Real time	Real time

Index code (decimal)	Param.	Function	Value range	Default	Unit	Change method	Effective mode
4	H04-03	DO2 logic selection	• 0: Output low level (L) when active (optocoupler ON) • 1: Output high level (H) when active (optocoupler OFF)	0	-	Real time	Real time
5	H04-04	DO3 function selection	See H04-00.	22	-	Real time	Real time
6	H04-05	DO3 logic	• 0: Output low level (L) when active (optocoupler ON) • 1: Output high level (H) when active (optocoupler OFF)	0	-	Real time	Real time
23	H04-22	DO source	• 0: DO1 • 1: DO2 • 2: DO3	0	-	At stop	Real time
40	H04-39	Motor fan started, with DO outputting high level	-	0	-	Real time	Real time
51	H04-50	AO1 signal selection	• 0: Motor speed (1 V/1000 rpm) • 1: Speed reference (1 V/1000 rpm) • 2: Torque reference (1 V/100 x rated torque) • 3: Position deviation (0.05 V/1 reference unit) • 4: Position deviation (0.05 V/1 encoder unit) • 5: Position reference speed (1 V/1000 rpm) • 6: Positioning completed • 7: Speed feedforward (1 V/1000 rpm) • 8: AI1 voltage • 9: AI2 voltage • 10: AI3 voltage • 12: Magnitude of output voltage	0	-	Real time	Real time
52	H04-51	AO1 offset voltage	-	0	mV	Real time	Real time
53	H04-52	AO1 scaling factor	-	1.00	-	Real time	Real time
57	H04-56	AO1-MODE output selection	• 0: Current output • 1: Voltage output	1	-	Real time	Real time
58	H04-57	Forced AO output	-	0.000	V	Real time	Real time

12.3.6 H05 Position Control Parameters

Index code (decimal)	Param.	Function	Value range	Default	Unit	Change method	Effective mode
5	H05-04	First-order low-pass filter time constant	-	0	ms	At stop	Real time
7	H05-06	Moving average filter time constant of position references	-	0	ms	At stop	Real time
17	H05-16	Clear action selection	• 0: Clear position deviation upon S-OFF or fault • 1: Clear position deviation pulses upon fault • 2: Clear position deviation upon ClrPosErr signal input from DI	0	-	At stop	Real time
21	H05-20	Condition for outputting positioning completed (COIN) signal	• 0: Absolute value of position deviation lower than the value of 6067h • 1: Absolute value of position deviation lower than the value of 6067h and filtered position reference is 0 • 2: Absolute value of position deviation lower than the value of 6067h and unfiltered position reference is 0	0	-	Real time	Real time
22	H05-21	Positioning completion amplitude	-	7	-	Real time	Real time

Index code (decimal)	Param.	Function	Value range	Default	Unit	Change method	Effective mode
31	H05-30	Homing enable	• 0: Disabled • 1: Homing enabled through the HomingStart signal input from DI • 2: Homing enabled through the HomingStart signal input from DI • 3: Homing started immediately upon power-on • 4: Homing performed immediately • 5: Electrical homing started • 6: Current position as the home	0	-	Real time	Real time

Index code (decimal)	Param.	Function	Value range	Default	Unit	Change method	Effective mode
32	H05-31	Mode of home return	• 0: Forward homing, home switch as the deceleration point and home • 1: Reverse homing, home switch as the deceleration point and home • 2: Forward homing, Z signal as deceleration point and home • 3: Reverse homing, Z signal as deceleration point and home • 4: Forward homing, home switch as the deceleration point and Z signal as the home • 5: Forward homing, home switch as the deceleration point and Z signal as the home • 6: Forward homing, positive limit switch as deceleration point and home • 7: Reverse homing, negative limit switch as deceleration point and home • 8: Forward homing, positive limit switch as deceleration point and Z signal as home • 9: Reverse homing, negative limit switch as deceleration point signal and Z signal as home	0	-	At stop	Real time
33	H05-32	Speed in high-speed searching for home switch signal	-	100	rpm	Real time	Real time

Index code (decimal)	Param.	Function	Value range	Default	Unit	Change method	Effective mode
34	H05-33	Speed in low-speed searching for home switch signal	-	10	rpm	Real time	Real time
35	H05-34	Acceleration/ Deceleration time for home search	-	1000	ms	Real time	Real time
36	H05-35	Home search time limit	-	50000	ms	Real time	Real time
37	H05-36	Mechanical home offset	-	0	-	Real time	Real time
41	H05-40	Homing method	• 0: H05.36 (Mechanical home offset) used as the coordinate after homing, reverse homing applied after homing triggered again upon overtravel • 1: H05.36 (Mechanical home offset) used as the relative offset after homing, reverse homing applied after homing triggered again upon overtravel • 2: H05.36 (Mechanical home offset) used as the coordinate after homing, reverse homing applied automatically upon overtravel • 3: H05.36 (Mechanical home offset) used as the relative offset after homing, reverse homing applied automatically upon overtravel	0	-	At stop	Real time
45	H05-44	Encoder multi-turn data offset	-	0	-	At stop	Real time
47	H05-46	Multi-turn absolute position offset (low-order 32 bits)	-	0	-	At stop	Real time
49	H05-48	Multi-turn absolute position offset (high-order 32 bits)	-	0	-	At stop	Real time

Index code (decimal)	Param.	Function	Value range	Default	Unit	Change method	Effective mode
66	H05-65	Data reception status bit in master-slave synchronization	-	0	-	Read-only	-
67	H05-66	Data transmission status bit in master-slave synchronization	-	0	-	Read-only	-
68	H05-67	Master-slave synchronization enable	• 0: Inactive • 1: Active	0	-	Real time	Real time
69	H05-68	Master-slave axis setting	• 0: Slave axis • 1: Master axis	0	-	At stop	Real time
70	H05-69	PD filter time for master-slave synchronization	-	0.00	μs	Real time	Real time
71	H05-70	Regulator Kp in master-slave synchronization	-	0.0	Hz	Real time	Real time
72	H05-71	Regulator Kd in master-slave synchronization	-	0.0	%	Real time	Real time
73	H05-72	Receiving axis CAN ID in master-slave synchronization	-	0	-	At stop	Real time
74	H05-73	Position transmission delay	-	0	μs	Read-only	-
75	H05-74	Local axis delay	-	0	μs	Read-only	-
76	H05-75	Homing enable in master-slave synchronization	• 0: Inactive • 1: Active	0	-	Real time	Real time
77	H05-76	Homing mode in master-slave synchronization	• 0: Current position as the home • 1: Forward searching for limit position • 2: Reverse searching for limit position • 3: Last position as the home	0	-	Real time	Real time
81	H05-80	Re-homing mode for master-slave synchronization	• 32: Current position as the home • 35: Last position as the home	35	-	At stop	Real time
82	H05-81	Re-homing enable in master-slave synchronization	• 0: Inactive • 1: Active • 2: Recalculate delay	0	-	Real time	Real time

Index code (decimal)	Param.	Function	Value range	Default	Unit	Change method	Effective mode
83	H05-82	Excessive position deviation threshold in master-slave synchronization	-	10.0	°	At stop	Real time
84	H05-83	Torque deviation Ki in master and slave synchronization	-	5.0	-	Real time	Real time
85	H05-84	Excessive torque deviation threshold in master-slave synchronization	-	50.0	%	At stop	Real time
86	H05-85	Torque deviation Kp in master-slave synchronization	-	1000	-	Real time	Real time
87	H05-86	Speed reference source in master-slave synchronization	• 0: Host controller • 1: Built-in process of the drive	0	-	At stop	Real time
88	H05-87	Position deviation in the master-slave synchronization	-	0	-	Real time	Real time

12.3.7 H06 Speed Control Parameters

Index code (decimal)	Param.	Function	Value range	Default	Unit	Change method	Effective mode
1	H06-00	Source of speed reference A	• 0: H0603 • 1: AI1 • 2: AI2	0	-	At stop	Real time
2	H06-01	Source of speed reference B	• 0: H0603 • 1: AI1 • 2: AI2 • 3: No action • 4: No action • 5: Multi-speed reference	0	-	At stop	Real time
3	H06-02	Speed reference selection	• 0: Source of main speed reference A • 1: Source of main speed reference B • 2: A+B • 3: Switched between A/B • 4: Communication • 5: Hydraulic control • 6: Reserved • 7: All-electric control	0	-	At stop	Real time

Index code (decimal)	Param.	Function	Value range	Default	Unit	Change method	Effective mode
4	H06-03	Speed reference set through operating panel	-	200	rpm	Real time	Real time
5	H06-04	Jog speed reference	-	100	rpm	Real time	Real time
6	H06-05	Acceleration ramp time of speed reference	-	200	ms	Real time	Real time
7	H06-06	Deceleration ramp time of speed reference	-	200	ms	Real time	Real time
8	H06-07	Maximum speed limit	-	6000	rpm	Real time	Real time
9	H06-08	Positive speed limit	-	6000	rpm	Real time	Real time
10	H06-09	Negative speed limit	-	6000	rpm	Real time	Real time
12	H06-11	Torque feedforward control	• 0: No torque feedforward • 1: Internal torque feedforward • 2: 60B2 used as external torque feedforward •	1	-	Real time	Real time
13	H06-12	Synchronization disable upon switching from S-OFF to S-ON	-	0	-	Real time	Real time
14	H06-13	Speed reference set through software tool	-	0	-	Real time	Real time
15	H06-14	Software speed reference enable	• 0: Software stop • 1: Software start	0	-	Real time	Real time
16	H06-15	Speed reference threshold for zero speed/position clamp	-	10	rpm	Real time	Real time
17	H06-16	Motor rotation speed threshold	-	20	rpm	Real time	Real time
19	H06-18	Threshold of speed arrival signal	-	1000	rpm	Real time	Real time
20	H06-19	Threshold of zero speed output signal	-	10	rpm	Real time	Real time
27	H06-26	Speed reference filter mode	-	0	-	At stop	Real time
28	H06-27	Speed reference low-pass filter time	-	2.00	ms	At stop	Real time
29	H06-28	Speed reference moving average filter time	-	0.00	ms	At stop	Real time
30	H06-29	Zero clamp OFF threshold	-	1	-	Real time	Real time

Index code (decimal)	Param.	Function	Value range	Default	Unit	Change method	Effective mode
34	H06-33	Synchronization mode	• 0: Position synchronization • 1: Torque synchronization	0	-	Real time	Real time
35	H06-34	Step skipped during synchronization of parallel screws	-	0	-	Real time	Real time
36	H06-35	Zero speed clamp delay	-	0	ms	Real time	Real time
37	H06-36	Speed dead zone	-	1	rpm	Real time	Real time
38	H06-37	Slave axis speed reference source	• 0: Master-slave axis speed deviation compensation • 1: Master axis host controller speed reference & master-slave axis speed deviation compensation	0	-	Real time	Real time
39	H06-38	Zero speed clamp output limit	-	50	-	Real time	Real time
40	H06-39	Excessive torque deviation during master and slave synchronization	-	20	%	Real time	Real time
41	H06-40	Home fine-tuning (block-making machine)	-	0	-	Real time	Real time
42	H06-41	Home reference position (block-making machine)		0	-	Real time	Real time
44	H06-43	Home auto-tuning (block-making machine)	• 0: Inactive • 1: Active	0	-	Real time	Real time
45	H06-44	Home auto-tuning completion (block-making machine)	• 0: Inactive • 1: Active	0	-	Real time	Real time
46	H06-45	Master and slave speed compensation limit	-	20	rpm	Real time	Real time

12.3.8 H07 Torque Control Parameters

Index code (decimal)	Param.	Function	Value range	Default	Unit	Change method	Effective mode
4	H07-03	Torque reference set through operating panel	-	0.0	%	Real time	Real time
6	H07-05	Torque reference filter time constant	-	0.79	ms	Real time	Real time
7	H07-06	2nd torque reference filter time constant	-	0.79	ms	Real time	Real time
8	H07-07	Torque limit source	• 0: Positive/Negative internal torque limit • 1: Positive/Negative external torque limit (through P-CL, N-CL) • 2: EtherCAT positive/negative external torque limit • 3: Smaller of external positive/ negative torque and EtherCAT external positive/negative torque limit (via P-CL, N-CL) as the torque limit • 4: Switching between external positive/negative torque and EtherCAT external positive/ negative torque limit (via P-CL, N-CL)	2	-	Real time	Real time
10	H07-09	Positive internal torque limit	-	300.0	%	Real time	Real time
11	H07-10	Negative internal torque limit	-	300.0	%	Real time	Real time
12	H07-11	Positive external torque limit	-	300.0	%	Real time	Real time
13	H07-12	Negative external torque limit	-	300.0	%	Real time	Real time
16	H07-15	Emergency stop torque	-	100.0	%	At stop	Real time
18	H07-17	Speed limit source selection	• 0: Internal speed limit • 1: EtherCAT external speed limit • 2: 2007-14h or 2007-15h used as internal speed limit as defined by FunIN.36	1	-	Real time	Real time

Index code (decimal)	Param.	Function	Value range	Default	Unit	Change method	Effective mode
20	H07-19	Internal speed limit in torque control	-	3000	rpm	Real time	Real time
21	H07-20	Negative internal speed limit in torque control	-	3000	rpm	Real time	Real time
22	H07-21	Base value for torque arrival	-	0.0	%	Real time	Real time
23	H07-22	Output torque upon torque arrival DO signal activation	-	20.0	%	Real time	Real time
24	H07-23	Output torque upon torque arrival DO signal deactivation	-	10.0	%	Real time	Real time
25	H07-24	Field weakening depth	-	1.15	%	Real time	Real time
26	H07-25	Maximum allowable demagnetization current	-	1.00	%	Real time	Real time
27	H07-26	Field weakening enable	• 0: Inactive • 1: Active	1	-	Real time	Real time
28	H07-27	Field weakening gain	-	300	-	Real time	Real time
35	H07-34	Overload ratio increase enable	-	0	-	At stop	Next power-on
41	H07-40	Speed limit threshold in torque control mode	-	1.0	ms	Real time	Real time
53	H07-52	Inverter real-time power monitoring	-	0.00	kW	Read-only	-
61	H07-60	Method selection for switching to pressure-holding position mode	• 0: Decelerate in advance • 1: Decelerate upon reaching the position	0	-	Real time	Real time
63	H07-62	Leveling position limit torque value	0-200.0	5.0	%	Real time	Real time
64	H07-63	Leveling timeout alarm time	1-65535	30	s	Real time	Real time
65	H07-64	Leveling state	0 to 65535	0	bit0: Internal leveling enable; bit1: Leveling completion flag	Real time	Real time
66	H07-65	Leveling speed	0 - 1000	3	rpm	Real time	Real time

Index code (decimal)	Param.	Function	Value range	Default	Unit	Change method	Effective mode
67	H07-66	Leveling speed slope	0-3000	1000	ms	Real time	Real time
68	H07-67	Leveling enable	0-1	0	-	Real time	Real time
69	H07-68	Leveling torque threshold	1.0-200.0	20.0	-	Real time	Real time

12.3.9 H08 Gain Parameters

Index code (decimal)	Param.	Function	Value range	Default	Unit	Change method	Effective mode
1	H08-00	Speed loop gain	-	25.0	Hz	Real time	Real time
2	H08-01	Speed loop integral time constant	-	31.83	ms	Real time	Real time
3	H08-02	Position loop gain	-	40.0	Hz	Real time	Real time
4	H08-03	2nd speed loop gain	-	50.0	Hz	Real time	Real time
5	H08-04	2nd speed loop integral time constant	-	15.92	ms	Real time	Real time
6	H08-05	2nd position loop gain	-	80.0	Hz	Real time	Real time
7	H08-06	Performance mode	• 0: Speed preferred • 1: Performance preferred	2	-	At stop	Real time
9	H08-08	2nd gain set mode setting	• 0: Fixed to the first gain set, P/PI switched by external DI • 1: 1st and 2nd gain set switched based on H0809	1	-	Real time	Real time

Index code (decimal)	Param.	Function	Value range	Default	Unit	Change method	Effective mode
10	H08-09	Gain switchover condition selection	• 0: Fixed to the 1st gain set (PS) • 2: Torque reference exceeds the threshold (PS) • 3: Speed reference exceeds the threshold (PS) • 4: Speed reference change rate exceeds the threshold (PS) • 5: Speed reference exceeds the high-speed/low-speed thresholds (PS) • 6: Position deviation exceeds the limit (P) • 7: Position reference generated (P) • 8: Positioning not completed (P) • 9: Actual speed reaches the threshold (P) • 10: Position reference generated + Actual speed reaches the threshold (P)	0	-	Real time	Real time
11	H08-10	Gain switchover delay	-	5.0	ms	Real time	Real time
12	H08-11	Gain switchover level	-	50	-	Real time	Real time
13	H08-12	Gain switchover time lag	-	30	-	Real time	Real time
14	H08-13	Position gain switchover time	-	3.0	ms	Real time	Real time
16	H08-15	Load moment of inertia ratio	-	1.00	-	Real time	Real time
19	H08-18	Speed feedforward filter time constant	-	0.50	ms	Real time	Real time
20	H08-19	Speed feedforward gain	-	0.0	%	Real time	Real time
21	H08-20	Torque feedforward filter time constant	-	0.50	ms	Real time	Real time
22	H08-21	Torque feedforward gain	-	0.0	%	Real time	Real time

Index code (decimal)	Param.	Function	Value range	Default	Unit	Change method	Effective mode
23	H08-22	Speed feedback filter option	• 0: Disable • 1: 2 times • 2: 4 times • 3: 8 times • 4: 16 times	0	-	At stop	Real time
24	H08-23	Cutoff frequency of speed feedback low-pass filter	-	4000	-	Real time	Real time
25	H08-24	Pseudo derivative feedforward control coefficient	-	92.0	%	Real time	Real time
29	H08-28	Speed feedforward coefficient 2	-	0	-	Real time	Real time
43	H08-42	Torque deviation limit increase allowed upon excessive position deviation in dual-axis synchronization	• 0: Inactive • 16: Active	0	-	Real time	Real time
44	H08-43	YZM high/ medium/low slope	• 1: High slope • 2: Medium slope • 3: Low slope	1	-	Real time	Real time
46	H08-45	Carrier frequency change delay	The carrier frequency changes 50 ms after the default conditions are met.	-	-	Real time	Real time
47	H08-46	PI/P switchover torque	-	0	-	Real time	Real time
48	H08-47	Speed stability judgment range	-	5	-	Real time	Real time
49	H08-48	Speed stabiligy judgment time	-	0	-	Real time	Real time

12.3.10 H09 Auto-tuning Parameters

Index code (decimal)	Param.	Function	Value range	Default	Unit	Change method	Effective mode
1	H09-00	Auto-tuning mode selection	0: Inactive, gain parameters tuned manually • 0: Inactive, gain parameters tuned manually • 1: Parameter auto-tuning mode, gain parameters tuned automatically based on the stiffness level • 2: Positioning mode, gain parameters tuned automatically based on the stiffness table	1	-	Real time	Real time
2	H09-01	Stiffness level selection	-	14	-	Real time	Real time
3	H09-02	Adaptive notch mode	• 0: Not updated • 1: One adaptive filter (3rd notch) activated • 2: Two adaptive filters (3rd and 4th notches) activated • 3: Resonance point tested only, displayed in H0924 • 4: Adaptive notch cleared and the 3rd and 4th notches restored to default values	0	-	Real time	Real time
4	H09-03	Online inertia auto-tuning mode	• 0: Disabled • 1: Enabled, inertia ratio changing slowly • 2: Enabled, inertia ratio changing normally • 3: Enabled, inertia ratio changing quickly	0	-	Real time	Real time

Index code (decimal)	Param.	Function	Value range	Default	Unit	Change method	Effective mode
5	H09-04	Suppression mode of low-frequency resonance	• 0: Set low-frequency resonance suppression filter parameters manually • 1: Set parameters of low-frequency resonance suppression filter automatically	0	-	Real time	Real time
6	H09-05	Offline inertia auto-tuning mode	• 0: Positive and negative triangular wave mode • 1: Jog mode	0	-	At stop	Real time
7	H09-06	Maximum speed of inertia auto-tuning	-	500	rpm	At stop	Real time
8	H09-07	Time constant for accelerating to maximum speed during inertia auto-tuning	-	125	ms	At stop	Real time
9	H09-08	Waiting time upon completion of single-shot inertia auto-tuning	-	800	ms	At stop	Real time
10	H09-09	Number of motor revolutions upon completion of single-shot inertia auto-tuning	-	0.00	-	Read-only	-
13	H09-12	Frequency of the 1st notch	-	4000	-	Real time	Real time
14	H09-13	Bandwidth level of the 1st notch	-	2	-	Real time	Real time
15	H09-14	Depth level of the 1st notch	-	0	-	Real time	Real time
16	H09-15	Frequency of the 2nd notch	-	4000	-	Real time	Real time
17	H09-16	Bandwidth level of the 2nd notch	-	2	-	Real time	Real time
18	H09-17	Depth level of the 2nd notch	-	0	-	Real time	Real time
19	H09-18	Frequency of the 3rd notch	-	4000	-	Real time	Real time
20	H09-19	Bandwidth level of the 3rd notch	-	2	-	Real time	Real time
21	H09-20	Depth level of the 3rd notch	-	0	-	Real time	Real time
22	H09-21	Frequency of the 4th notch	-	4000	-	Real time	Real time
23	H09-22	Bandwidth level of the 4th notch	-	2	-	Real time	Real time

Index code (decimal)	Param.	Function	Value range	Default	Unit	Change method	Effective mode
24	H09-23	4th notch depth level	-	0	-	Real time	Real time
25	H09-24	Auto-tuned resonance frequency	-	0	-	Read-only	-
31	H09-30	Torque disturbance compensation gain	-	0.0	%	Real time	Real time
32	H09-31	Filter time constant of torque disturbance observer	-	0.50	ms	Real time	Real time
38	H09-38	Frequency of low-frequency resonance	-	100.0	Hz	At stop	Real time
40	H09-39	Width of low-frequency resonance suppression	-	2	-	At stop	Real time
41	H09-40	Overshoot integral limit	-	8	-	Real time	Real time
42	H09-41	Reset fault 901	• 0: No action • 1: Reset fault 901	0	-	Real time	Real time

12.3.11 H0A Fault and Protection Parameters

Index code (decimal)	Param.	Function	Value range	Default	Unit	Change method	Effective mode
1	H0A-00	Power input phase loss protection	0: Allow phase loss fault and inhibit phase loss alarm • 0: Allow phase loss fault and inhibit phase loss alarm • 1: Allow phase loss fault and alarm • 2: Inhibit phase loss fault and alarm	0	-	Real time	Real time
2	H0A-01	Absolute position limit	• 0: Disable • 1: Enable • 2: Enabled after homing	0	-	At stop	Real time
3	H0A-02	730 fault flag bit	-	0	-	At stop	Real time
4	H0A-03	Retention upon power failure	• 0: Disable • 1: Enable • 2: Disable and mask control power undervoltage fault	1	-	Real time	Real time
5	H0A-04	Motor overload protection gain	-	100	-	At stop	Real time

Index code (decimal)	Param.	Function	Value range	Default	Unit	Change method	Effective mode
7	H0A-06	Motor overload level	-	0	-	At stop	Real time
8	H0A-07	U/V/W phase sequence auto-tuning enable	• 0: U/V/W phase sequence not auto-tuned during angle auto-tuning • 1: U/V/W phase sequence auto-tuned during angle auto-tuning	1	-	Real time	Real time
9	H0A-08	Overspeed threshold	-	0	-	Real time	Real time
13	H0A-12	Runaway protection enable	• 0: Inactive • 1: Active	1	-	Real time	Real time
26	H0A-25	Filter time constant of speed feedback display values	-	2	ms	At stop	Real time
33	H0A-32	Overtemperature protection time window upon stall	-	200	ms	Real time	Real time
34	H0A-33	Overtemperature protection enable upon stall	• 0: Inactive • 1: Active	0	-	Real time	Real time
37	H0A-36	Encoder multi-turn overflow fault selection	• 0: Inactive • 1: Active	1	-	At stop	Real time

12.3.12 H0B Monitoring Parameters

Index code (decimal)	Param.	Function	Value range	Default	Unit	Change method	Effective mode
1	H0B-00	Actual motor speed	-	0	rpm	Read-only	-
2	H0B-01	Speed reference	-	0	rpm	Read-only	-
3	H0B-02	Internal torque reference	-	0.0	%	Read-only	-
4	H0B-03	Monitored DI state	-	0	-	Read-only	-
5	H0B-04	STO 24 V ON state	-	0	-	Read-only	-
6	H0B-05	Monitored DO state	-	0	-	Read-only	-
8	H0B-07	Absolute position counter	-	0	p	Read-only	-
10	H0B-09	Mechanical angle	-	0	°	Read-only	-
11	H0B-10	Electrical angle	-	0.0	°	Read-only	-

Index code (decimal)	Param.	Function	Value range	Default	Unit	Change method	Effective mode
13	H0B-12	Average load rate	-	0.0	%	Read-only	-
14	H0B-13	Input position reference counter	-	0	p	Read-only	-
16	H0B-15	Encoder position deviation counter	-	0	p	Read-only	-
18	H0B-17	Feedback pulse counter	-	0	p	Read-only	-
20	H0B-19	Total operating time	-	0.0	s	Read-only	-
22	H0B-21	AI1 sampling voltage value (effective value)	-	0.00	V	Read-only	-
23	H0B-22	AI2 sampling voltage value (effective value)	-	0.00	V	Read-only	-
24	H0B-23	AI3 sampling voltage value (effective value)	-	0.000	V	Read-only	-
25	H0B-24	Effective value of phase current	-	0.00	A	Read-only	-
27	H0B-26	Bus voltage	-	0.0	V	Read-only	-
28	H0B-27	Drive temperature	-	0	°C	Read-only	-
34	H0B-33	Fault log	-	0	-	Real time	Real time
35	H0B-34	Fault code of the selected fault	-	0	-	Read-only	-
36	H0B-35	Time stamp of selected fault	-	0.0	s	Read-only	-
38	H0B-37	Motor speed upon the selected fault	-	0	rpm	Read-only	-
39	H0B-38	Motor phase U current upon selected fault	-	0.00	A	Read-only	-
40	H0B-39	Motor phase V current upon selected fault	-	0.00	A	Read-only	-
41	H0B-40	Bus voltage upon the selected fault	-	0.0	V	Read-only	-
42	H0B-41	Input terminal state upon selected fault	-	0	-	Read-only	-
43	H0B-42	Output terminal state upon selected fault	-	0	-	Read-only	-
44	H0B-43	Number of the group with abnormal parameters	-	0	-	Read-only	-
45	H0B-44	Offset in the group with abnormal parameters	-	0	-	Read-only	-
46	H0B-45	Internal fault code	-	0	-	Read-only	-
52	H0B-51	Internal fault code upon selected fault	-	0	-	Read-only	-
54	H0B-53	Position deviation counter	-	0	p	Read-only	-

Index code (decimal)	Param.	Function	Value range	Default	Unit	Change method	Effective mode
56	H0B-55	Actual motor speed	-	0.0	rpm	Read-only	-
59	H0B-58	Mechanical absolute position (32 low-order bits)	-	0	p	Read-only	-
61	H0B-60	Mechanical absolute position (32 high-order bits)	-	0	p	Read-only	-
63	H0B-62	Effective value of drive output voltage	-	0.0	V	Read-only	-
67	H0B-66	Temperature of the rectifier	-	0	°C	Read-only	-
71	H0B-70	Number of the absolute encoder revolutions	-	0	p	Read-only	-
72	H0B-71	Position of absolute encoder within one turn	-	0	p	Read-only	-
78	H0B-77	Encoder position (32 low-order bits)	-	0	p	Read-only	-
80	H0B-79	Encoder position (32 high-order bits)	-	0	p	Read-only	-
82	H0B-81	Single-turn position of the rotary load (32 low-order bits)	-	0	p	Read-only	-
84	H0B-83	Single-turn position of the rotary load (32 high-order bits)	-	0	p	Read-only	-
86	H0B-85	Single-turn position of the rotary load (reference unit)	-	0	p	Read-only	-
89	H0B-88	Motor temperature	-	0	°C	Read-only	-
91	H0B-90	Motor phase U current	-	0.00	A	Read-only	-
92	H0B-91	Motor phase V current	-	0.00	A	Read-only	-
93	H0B-92	Motor phase W current	-	0.00	A	Read-only	-
94	H0B-93	Temperature threshold for turning on the motor fan	-	45	°C	Real time	Real time
99	H0B-98	Motor temperature	-	0	°C	Read-only	-
100	H0B-99	Drive temperature	-	0	°C	Read-only	-

12.3.13 H0C Communication Parameters

Index code (decimal)	Param.	Function	Value range	Default	Unit	Change method	Effective mode
1	H0C-00	Drive axis address	3, 4: Parameter packing, configured for dual-screw mode	1	-	Real time	Next power-on
2	H0C-01	YZM check parameters	-	0	-	Real time	Real time
3	H0C-02	Baud rate of the serial port	• 0: 2400 bps • 1: 4800 bps • 2: 9600 bps • 3: 10200bps • 4: 38400 bps • 5: 115200bps •	5	-	Real time	Real time
4	H0C-03	Modbus parity check	• 0: No parity, 2 stop bits • 1: Even parity, 1 stop bit • 2: Odd parity, 1 stop bit • 3: No parity, 1 stop bit	0	-	Real time	Real time
5	H0C-04	EtherCAT slave name	-	0	-	Read-only	-
6	H0C-05	EtherCAT slave alias	-	0	-	At stop	Real time
9	H0C-08	Baud rate for CAN communication	• 0: 20 kpbs • 1: 50 kpbs • 2: 100 kpbs • 3: 125 kpbs • 4: 250 kpbs • 5: 500 kpbs • 6: 800 kbps • 7: 1 Mbps	5	-	Real time	Real time
14	H0C-13	Saving values written through communication to EPPROM	• 0: Not save • 1: Saving 2000h series object dictionary written via communication to EEPROM • 2: Saving 6000h series object dictionary written via communication to EEPROM • 3: Saving 2000h and 6000h series object dictionary written via communication to EEPROM	3	-	Real time	Real time

Index code (decimal)	Param.	Function	Value range	Default	Unit	Change method	Effective mode
21	H0C-20	CAN enable in master-slave synchronization	• 0: Standard program • 1: Synchronous CAN program	0	-	At stop	Next power-on
23	H0C-22	EtherCAT DC mode selection	0 to 7	2	-	Real time	Next power-on
24	H0C-23	AL status code	-	0	-	Read-only	-
29	H0C-28	Host controller sync cycle	-	0	-	Read-only	-
30	H0C-29	XML version	-	0.0	-	Read-only	-
34	H0C-33	CAN communication enable of the rectifier	• 0: Inactive • 1: Active	0	-	Real time	Real time
35	H0C-34	Synchronous loss count	-	0	-	Read-only	-
36	H0C-35	Number of permissible EtherCAT sync interrupts	-	500	-	Real time	Real time
45	H0C-44	FPGA synchronous detection deviation threshold	-	3500	-	At stop	Real time
49	H0C-48	EtherCAT state machine	-	0	-	Read-only	-

12.3.14 H0D Auxiliary Function Parameters

Index code (decimal)	Param.	Function	Value range	Default	Unit	Change method	Effective mode
1	H0D-00	Software reset enable	• 0: Inactive • 1: Active	0	-	At stop	Real time
2	H0D-01	Fault reset	• 0: Inactive • 1: Active	0	-	At stop	Real time
3	H0D-02	Inertia auto-tuning	-	0	-	Real time	Real time
4	H0D-03	Encoder initial angle auto-tuning	• 0: Inactive • 1: Active	0	-	At stop	Real time
5	H0D-04	Read/Write in encoder ROM	• 0: Inactive • 1: Write ROM • 2: Read ROM	0	-	At stop	Real time
6	H0D-05	One-key auto-tuning	• 0: Inactive • 1: Auto-tuning 1 • 2: Auto-tuning 2	0	-	At stop	Real time

Index code (decimal)	Param.	Function	Value range	Default	Unit	Change method	Effective mode
11	H0D-10	AI automatic zero drift adjustment	• 0: Inactive • 1: AI1 auto-correction	0	-	At stop	Real time
12	H0D-11	Jog enable	-	0	-	Real time	Real time
18	H0D-17	Forced DI/DO enable	• 0: Inactive • 1: Forced DI enabled, and forced DO disabled • 2: Forced DO enabled, forced DI disabled • 3: Forced DI and DO enabled • 4: Forced DO enabled and forced DI disabled through EtherCAT control	0	-	Real time	Real time
19	H0D-18	Forced DI setting	-	447	-	Real time	Real time
20	H0D-19	Forced DO setting	-	0	-	Real time	Real time
21	H0D-20	Absolute encoder reset enable	• 0: Inactive • 1: Reset encoder fault • 2: Reset encoder fault and multi-turn data	0	-	At stop	Real time

12.3.15 H0E Error and Stop Parameters

Description of parameter setting range:

- 0: Coast to stop
- 1: External dynamic braking stop, keeping de-energized status after stop
- 2: External dynamic braking stop, keeping dynamic braking state after stop
- 3: Internal dynamic braking stop, keeping de-energized status after stop
- 4: Internal dynamic braking stop, keeping dynamic braking state after stop
- 5: Stop at zero speed, keeping de-energized status after stop
- 6: Stop at zero speed, keeping position lock status after stop
- 7: Speed ramp to stop, keeping de-energized status after stop
- 8: Speed ramp to stop, keeping position lock status after stop
- 9: Speed+Torque ramp to stop, keeping de-energized status after stop
- A: Speed+Torque ramp to stop, keeping position lock status after stop

Index code (decimal)	Param.	Name	Default	Unit	Change method	Effective mode
1	H0E-00	Stop mode for the 1st group of faults	0x0000	-	At stop	Real time
	Setting range: • Ones (0 to A): Access to FPGA by MCU timeout (E.100.0) • Tens (0 to A): Logic configuration fault (E.102.0) • Hundreds (0 to A): Mismatch between FPGA and MCU models (E.103.0) • Thousands (0 to A): FPGA transmission interrupt timeout (E.104.0)					
2	H0E-01	Stop mode for the 2nd group of faults	0x0000	-	At stop	Real time
	Setting range: • Ones (0 to A): Current loop interrupt or soft interrupt timeout (E.104.1) • Tens (0 to A): System parameter error cannot be reset, requiring parameters to be restored to default (E.105.0) • Hundreds (0 to A): Write parameter storage fault (E.108.0) • Thousands (0 to A): Read parameter storage fault (E.108.1) •					
3	H0E-02	Stop mode for the 3rd group of faults	0x0000	-	At stop	Real time
	Setting range: • Ones (0 to A): Manufacturer parameter error (E.111.0) • Tens (0 to A): Product matching fault, no corresponding encoder found (E.120.0) • Hundreds (0 to A): Product matching fault, no corresponding motor found (E.120.1) • Thousands (0 to A): Read parameter storage fault (E.108.1)					
4	H0E-03	Stop mode for the 4th group of faults	0x0000	-	At stop	Real time
	Setting range: • Ones (0 to A): Parameter mismatch when set to 2nd encoder motor model (E.122.0) • Tens (0 to A): Product matching fault, no corresponding drive found (E.123.0) • Hundreds (0 to A): Data check error or no parameter saved in the motor ROM (E.136.0) • Thousands (0 to A): Bus encoder motor code error (E.120.2)					
5	H0E-04	Stop mode for the 5th group of faults	0x0400	-	At stop	Real time
	Setting range: • Ones (0 to A): FPGA system sampling operation timeout (E.208.0) • Tens (0 to A): Timeout caused by failure of MCU to timely update torque references (E.208.1) • Hundreds (0 to A): Error caused by encoder communication timeout (E.208.2) • Thousands (0 to A): Error caused by current sampling (7860) (E.208.3)					
6	H0E-05	Stop mode for the 6th group of faults	0x0400	-	At stop	Real time
	Setting range: • Ones (0 to A): Error caused by analog/digital conversion timeout (E.208.4) • Tens (0 to A): Output ground fault (E.210.0) • Hundreds (0 to A): Output ground fault (E.210.1) • Thousands (0 to A): Encoder battery failure (E.731.0)					

Index code (decimal)	Param.	Name	Default	Unit	Change method	Effective mode
7	H0E-06	Stop mode for the 7th group of faults	0x4444	-	At stop	Real time
	Setting range: • Ones (0 to A): Encoder multi-turn counting error (E.733.0) • Tens (0 to A): Encoder multi-turn counting overflow (E.735.0) • Hundreds (0 to A): Encoder multi-turn counting overflow (E.735.1) • Thousands (0 to A): Encoder Z signal interference (E.740.0)					
8	H0E-07	Stop mode for the 8th group of faults	0x4444	-	At stop	Real time
	Setting range: • Ones (0 to A): Encoder Z signal interference (E.740.8) • Tens (0 to A): Nikon encoder (E.767.0) • Hundreds (0 to A): Nikon encoder EEPROM damaged (E.765.2) • Thousands (0 to A): AD sampling fault reported by FPGA (E.835.0)					
9	H0E-08	Stop mode for the 9th group of faults	0xA444	-	At stop	Real time
	Setting range: • Ones (0 to A): Encoder Z signal interference (E.740.8) • Tens (0 to A): Nikon encoder (E.767.0) • Hundreds (0 to A): Nikon encoder EEPROM damaged (E.765.2) • Thousands (0 to A): AD sampling fault reported by FPGA (E.835.0)					
10	H0E-09	Stop mode for the 10th group of faults	0x0444	-	At stop	Real time
	Setting range: • Ones (0 to A): Encoder parameter error (E.A33.0) • Tens (0 to A): Encoder echo check error (E.A34.0) • Hundreds (0 to A): Z signal disconnected (E.A35.0) • Thousands (0 to A): System parameter error (E.101.0)					
11	H0E-10	Stop mode for the 11th group of faults	0x0000	-	At stop	Real time
	Setting range: • Ones (0 to A): Model code check error (E.102.1) • Tens (0 to A): Motor parameter mismatch upon absolute position function (E.122.1) • Hundreds (0 to A): DI function assignment fault (E.130.0) • Thousands (0 to A): DO function assignment fault (E.131.0)					
12	H0E-11	Stop mode for the 12th group of faults	0x0004	-	At stop	Real time
	Setting range: • Ones (0 to A): EEPROM error in reading/writing ABSENC (E.135.0) • Tens (0 to A): Hardware overcurrent fault (E.201.0) • Hundreds (0 to A): Hardware overcurrent fault (E.201.1) • Thousands (0 to A): Hardware overcurrent fault (E.201.2)					
13	H0E-12	Stop mode for the 13th group of faults	0x0004	-	At stop	Real time
	Setting range: • Ones (0 to A): Hardware overcurrent fault (E.201.3) • Tens (0 to A): D/Q current overflow (E.207.0) • Hundreds (0 to A): UVW wiring error, requiring any two phase cables to be swapped (E.220.0) • Thousands (0 to A): UVW phase loss (E.220.1)					

Index code (decimal)	Param.	Name	Default	Unit	Change method	Effective mode
14	H0E-13	Stop mode for the 14th group of faults	0x4444	-	At stop	Real time
	Setting range: • Ones (0 to A): Runaway alarm upon incorrect wiring of U, V, and W phases (E.234.0) • Tens (0 to A): Overvoltage (E.400.0) • Hundreds (0 to A): Undervoltage (E.410.0) • Thousands (0 to A): Speed exceeding the maximum speed					
15	H0E-14	Stop mode for the 15th group of faults	0x4004	-	At stop	Real time
	Setting range: • Ones (0 to A): FPGA internal speed measurement overflow (E.501.0) • Tens (0 to A): Offline inertia auto-tuning failure (E.600.0) • Hundreds (0 to A): Angle auto-tuning failure (E.602.0) • Thousands (0 to A): Encoder interference fault (E.740.2)					
16	H0E-15	Stop mode for the 16th group of faults	0x4444	-	At stop	Real time
	Setting range: • Ones (0 to A): Single-turn calculation error (E.740.3) • Tens (0 to A): Counting increment error (E.740.4) • Hundreds (0 to A): Nikon encoder communication fault (E.755.0) • Thousands (0 to A): Nikon encoder communication fault (E.755.1)					
17	H0E-16	Stop mode for the 17th group of faults	0x0000	-	At stop	Real time
	Setting range: • Ones (0 to A): Angle auto-tuning timeout (E.800.0) • Tens (0 to A): Parameter auto-tuning timeout (E.800.1) • Hundreds (0 to A): PI auto-tuning timeout (E.800.2) • Thousands (0 to A): Parameter auto-tuning deactivated (E.801.0)					
18	H0E-17	Stop mode for the 18th group of faults	0xA44A	-	At stop	Real time
	Setting range: • Ones (0 to A): AD sampling overvoltage fault of the DSP (E.834.1) • Tens (0 to A): AD sampling overvoltage fault of the DSP (E.834.2) • Hundreds (0 to A): AD sampling overvoltage fault of the DSP (E.834.3) • Thousands (0 to A): AD zero drift operation error (E.836.0)					
19	H0E-18	Stop mode for the 19th group of faults	0x4400	-	At stop	Real time
	Setting range: • Ones (0 to A): Excessive encoder position deviation at next power-on (E.901.0) • Tens (0 to A): Motor power cables disconnected (E.939.0) • Hundreds (0 to A): Excessive speed deviation (E.044.0) • Thousands (0 to A): Excessive deviation due to torque limit (E.044.1)					
20	H0E-19	Stop mode for the 20th group of faults	0x4244	-	At stop	Real time
	Setting range: • Ones (0 to A): Pressure sensor disconnected (E.046.0) • Tens (0 to A): S-ON command inactive (E.121.0) • Hundreds (0 to A): STO signal input protection (E.300.0) • Thousands (0 to A): Rectifier fault (E.422.0)					

Index code (decimal)	Param.	Name	Default	Unit	Change method	Effective mode
21	H0E-20	Stop mode for the 21st group of faults	0x4444	-	At stop	Real time
	Setting range: • Ones (0 to A): Rectifier power-down fault (E.423.0) • Tens (0 to A): Root extraction error (E.466.0) • Hundreds (0 to A): Frequency division pulse output overspeed (E.510.0) • Thousands (0 to A): Drive overload (E.610.0)					
22	H0E-21	Stop mode for the 22nd group of faults	0x4444	-	At stop	Real time
	Setting range: • Ones (0 to A): Motor overload (E.620.0) • Tens (0 to A): Motor overload (E.620.1) • Hundreds (0 to A):Motor stall overtemperature protection (E.630.0) • Thousands (0 to A): Heatsink overtemperature (E.650.0)					
23	H0E-22	Stop mode for the 23rd group of faults	0x44AA	-	At stop	Real time
	Setting range: • Ones (0 to A): Motor overtemperature (PTC) (E.660.0) • Tens (0 to A): Temperature too high (E.660.1) • Hundreds (0 to A): Encoder battery alarm (E.730.0) • Thousands (0 to A): Encoder Tx-end communication check error (E.732.0)					
24	H0E-23	Stop mode for the 24th group of faults	0x4444	-	At stop	Real time
	Setting range: • Ones (0 to A): Encoder Z signal interference (E.745.0) • Tens (0 to A): Encoder Z signal interference (E.750.2) • Hundreds (0 to A): Encoder Z signal interference (E.750.3) • Thousands (0 to A): Encoder Z signal interference (E.750.4)					
25	H0E-24	Stop mode for the 25th group of faults	0x4444	-	At stop	Real time
	Setting range: • Tens (0 to A): Encoder Z signal interference (E.750.5) • Tens (0 to A): Encoder Z signal interference (E.750.6) • Hundreds (0 to A): Encoder overtemperature (E.760.0) • Thousands (0 to A): Nikon encoder limit violation (overtemperature, overspeed, and encoder EEPROM access error) (E.765.0)					
26	H0E-25	Stop mode for the 26th group of faults	0x4A40	-	At stop	Real time
	Setting range: • Ones (0 to A): Three-phase unbalance (E.940.0) • Tens (0 to A): Frequent parameter storage (E.942.0) • Hundreds (0 to A): Position reference or feedback reaching the limit (E.997.0) • Thousands (0 to A): Object dictionary value setting error (E.998.0)					
27	H0E-26	Stop mode for the 27th group of faults	0x0000	-	At stop	Real time
	Setting range: • Ones (0 to A): Resistance auto-tuning failure (E.A42.1) • Hundreds (0 to A): Inductance auto-tuning failure (E.A42.2) • Hundreds (0 to A): Back EMF auto-tuning failure (E.A42.3) • Thousands (0 to A): Motor parameter auto-tuning failure (E.A42.6)					

Index code (decimal)	Param.	Name	Default	Unit	Change method	Effective mode
28	H0E-27	Stop mode for the 28th group of faults	0x44AA	-	At stop	Real time
	Setting range: • Ones (0 to A): Excessive position deviation (E.B00.6) • Tens (0 to A): Position reference input error (E.B01.0) • Hundreds (0 to A): Electronic gear ratio setting error (E.B03.0) • Thousands (0 to A): Electronic gear ratio setting error (E.B03.1)					
29	H0E-28	Stop mode for the 29th group of faults	0xA444	-	At stop	Real time
	Setting range: • Ones (0 to A): Electronic gear ratio setting error (E.B03.2) • Tens (0 to A): ECT electronic gear ratio setting error (E.B03.3) • Hundreds (0 to A): Switchover (internal/external) not allowed during hybrid use of fully closed-loop and multi-position absolute modes (E.B04.0) • Thousands (0 to A): Mold protection parameter read error (E.B05.0)					
30	H0E-29	Stop mode for the 30th group of faults	0xAAAA	-	At stop	Real time
	Setting range: • Ones (0 to A): Reset after saving mold protection parameters (E.B06.0) • Tens (0 to A): Number of points to be collected higher than the maximum number of points 8 x 1024 (E.B07.0) • Hundreds (0 to A): Mold protection (E.B08.0) • Thousands (0 to A): Communication interrupted (E.D03.0)					
31	H0E-30	Stop mode for the 31th group of faults	0xAAAA	-	At stop	Real time
	Setting range: • Ones (0 to A): CANopen communication timeout (E.D04.0) • Tens (0 to A): CANopen communication initialized (E.D05.0) • Hundreds (0 to A): CANopen communication reset (E.D06.0) • Thousands (0 to A): Bus disconnected (E.D07.0)					
32	H0E-31	Stop mode for the 32th group of faults	0xAAAA	-	At stop	Real time
	Setting range: • Ones (0 to A): Bus PDO transmission length error (E.D08.0) • Tens (0 to A): Lower limit of software position higher than the upper limit (E.D09.0) • Hundreds (0 to A): Home offset outside the software position limit (E.D10.0) • Thousands (0 to A): Sync frame error exceeding 1/4 of the sync cycle (E.D11.0)					
33	H0E-32	Stop mode for the 33th group of faults	0xAAAA	-	At stop	Real time
	Setting range: • Ones (0 to A): Rectifier CAN information loss (E.D12.0) • Tens (0 to A): Bus disconnected (E.E01.0) • Hundreds (0 to A): Bus off (E.E02.0) • Thousands (0 to A): Bus connection timeout (E.E03.0)					

Index code (decimal)	Param.	Name	Default	Unit	Change method	Effective mode
34	H0E-33	Stop mode for the 34th group of faults	0xAAAA	-	At stop	Real time
	Setting range: • Ones (0 to A): Expansion card internal communication timeout (E.E04.0) • Tens (0 to A): Station number conflict (E.E05.0) • Hundreds (0 to A): Station number setting error (E.E06.0) • Thousands (0 to A): Communication state machine error (E.E07.6)					
35	H0E-34	Stop mode for the 35th group of faults	0x4AA4	-	At stop	Real time
	Setting range: • Ones (0 to A): Sync loss (E.E08.0) • Tens (0 to A): System parameter error (E.E09.0) • Hundreds (0 to A): Configuration error (E.E0A.0) • Thousands (0 to A): ESI configuration file not programmed (E.E11.6)					
36	H0E-35	Stop mode for the 36th group of faults	0xAAA4	-	At stop	Real time
	Setting range: • Ones (0 to A): ECAT initialization failed (E.E12.0) • Tens (0 to A): ECAT sync cycle not a multiple of the PWM cycle (E.E13.0) • Hundreds (0 to A): Excessive deviation of the ECAT sync signal (E.E15.0) • Thousands (0 to A): Synchronous reception of master and slave failed (E.E20.1)					
37	H0E-36	Stop mode for the 37th group of faults	0x4AAA	-	At stop	Real time
	Setting range: • Ones (0 to A): Transmission failure during master and slave synchronization (E.E20.2) • Tens (0 to A): Excessive transmission delay during master and slave synchronization (E.E20.3) • Hundreds (0 to A): Excessive position deviation during master and slave synchronization (E.E20.4) • Thousands (0 to A): Excessive torque deviation during master and slave synchronization (E.E20.5)					
38	H0E-37	Stop mode for the 38th group of faults	0xAAAA	-	At stop	Real time
	Setting range: • Ones (0 to A): Master and slave axes faulty simultaneously (E.E20.6) • Tens (0 to A): False home (E20.7) • Hundreds (0 to A): Injection axis limit alarm (E.B09.0) • Thousands (0 to A): Process parameter setting error (E.B10.0)					
39	H0E-38	Stop mode for the 39th group of faults	0xAA24	-	At stop	Real time
	Setting range: • Ones (0 to A): Parallel screw fault in torque synchronization mode (E.E21.0) • Tens (0 to A): STO signal input protection, used when 03-37 = 2 (E.300.1) • Hundreds (0 to A): Brake error (E.310.0) • Thousands (0 to A): ESI check failed, namely XML_FLASH check failed (E.E11.0)					

Index code (decimal)	Param.	Name	Default	Unit	Change method	Effective mode
40	H0E-39	Stop mode for the 40th group of faults	0x004A	-	At stop	Real time
	Setting range: • Ones (0 to A): XMLEEPROM read/write failure (E.E11.1) • Tens (0 to A): Pressure sensor disconnected (voltage too low) (E.046.1) • Hundreds (0 to A): Braking unit DI loss (E.311.1) • Thousands (0 to A): Quick stop in master and slave synchronization (E.E25.0)					
41	H0E.40	Stop mode for the 41st group of faults	0x0444	-	At stop	Real time
	Setting range: • Ones (0 to A): Forward overtravel fault (E.010.0) • Tens (0 to A): Reverse overtravel fault (E.010.1) • Hundreds (0 to A): Positive/Negative limit setting error (E.010.2)					

Index code (decimal)	Param.	Name	Value range	Default	Unit	Change method	Effective mode
42	H0E-41	Stop mode upon alarm	-	0	-	At stop	Real time
43	H0E-42	Deceleration time upon torque ramp to stop	-	0.050	s	At stop	Real time
44	H0E-43	Switch for enabling stop upon alarm	• 0: Inactive • 1: Active	0	-	At stop	Real time
45	H0E-44	Error reporting test	-	0	-	Real time	Real time
46	H0E-45	Stop mode switchover upon fault	• 0: Inactive • 1: First stop mode • 2: Second stop mode	0	-	At stop	Real time
47	H0E-46	Deceleration time for ramp to stop	-	0.025	s	At stop	Real time
48	H0E-47	Input error code	-	0.0	-	Real time	Real time

12.3.16 H11 Multi-Position Parameters

Index code (decimal)	Param.	Function	Value range	Default	Unit	Change method	Effective mode
1	H11-00	Mode selection (low-order 16 bits) control word (high-order 16 bits)	Ones: Mode selection • 0: Disable built-in process • 1: Injection • 2: Back pressure • 3: Injection retract • 4: Mold opening/ closing • 5: Ejector pin • 6: Homing • 7: Hydraulic Ten-thousands: Control word • 0: No action • 1: Injection start • 2: Back pressure start • 3: Pre-charging injection retract start • 4: Post-charging injection retract start • 5: Mold opening start • 6: Mold closing start • 7: Ejection start • 8: Ejection retract start • 9: Cyclic ejection start • 11: Homing start • 12: Initial injection start • 13: Initial ejection retract start • 14: Mid-cycle stop	0	-	Real time	Real time
3	H11-02	Homing speed	-	10.0	rpm	Real time	Real time
4	H11-03	Zero position reference H32H	-	0	-	Read-only	-
5	H11-04	Zero position reference H32L	-	0	-	Read-only	-
6	H11-05	Zero position reference L32H	-	0	-	Read-only	-
7	H11-06	Zero position reference L32L	-	10000	-	Read-only	-
8	H11-07	Retract distance after homing completion	-	0.00	mm	Real time	Real time

Index code (decimal)	Param.	Function	Value range	Default	Unit	Change method	Effective mode
9	H11-08	Pressure holding switchover mode (basic injection parameter)	• 0: Time only • 1: Position-Time • 2: Pressure-Time • 3: Position-Pressure-Time • 4: Time-Speed • 5: Time-Position-Speed • 6: Time-Pressure-Speed • 7: Time-Position-Pressure-Speed • 8: Time-External communication	0	-	Real time	Real time
10	H11-09	Pressure holding switchover pressure (basic injection parameter)	-	50.0	MPa	Real time	Real time
11	H11-10	Pressure holding switchover position (basic injection parameter)	-	10.00	mm	Real time	Real time
12	H11-11	Pressure holding switchover speed (basic injection parameter)	-	100.0	rpm	Real time	Real time
13	H11-12	Injection time (basic injection parameter)	-	65.535	s	Real time	Real time
14	H11-13	System pressure (pressure sensor-related)	-	175.0	MPa	Real time	Real time
15	H11-14	Maximum pressure (pressure sensor-related)	-	250.0	MPa	Real time	Real time
16	H11-15	Minimum input voltage of pressure sensor You can set a negative analog input of the pressure sensor, but the corresponding pressure must be still positive.	-	0.000	V	Real time	Real time
17	H11-16	Corresponding setting of the minimum input of pressure sensor	-	0.0	MPa	Real time	Real time

Index code (decimal)	Param.	Function	Value range	Default	Unit	Change method	Effective mode
18	H11-17	Maximum input voltage of pressure sensor You can set a negative analog input of the pressure sensor, but the corresponding pressure must be still positive.	-	10.000	V	Real time	Real time
19	H11-18	Corresponding setting of the maximum input of pressure sensor	-	250.0	MPa	Real time	Real time
20	H11-19	Maximum motor speed limit	-	2200	rpm	At stop	Real time
21	H11-20	Maximum stroke of the screw (low-order 16 bits of the maximum position)	-	200.00	mm	At stop	Real time
22	H11-21	Maximum stroke of the screw (high-order 16 bits of the maximum position)	-	0	mm	At stop	Real time
23	H11-22	Maximum torque allowed by the action	-	300.0	%	Real time	Real time
24	H11-23	Injection position 1 in multi-position injection	-	85.00	mm	Real time	Real time
25	H11-24	Injection position 2 in multi-position injection	-	80.00	mm	Real time	Real time
26	H11-25	Injection position 3 in multi-position injection	-	75.00	mm	Real time	Real time
27	H11-26	Injection position 4 in multi-position injection	-	65.00	mm	Real time	Real time
28	H11-27	Injection position 5 in multi-position injection	-	60.00	mm	Real time	Real time
29	H11-28	Injection pressure 1 in multi-pressure injection	-	0.5	MPa	Real time	Real time
30	H11-29	Injection pressure 2 in multi-pressure injection	-	0.5	MPa	Real time	Real time

Index code (decimal)	Param.	Function	Value range	Default	Unit	Change method	Effective mode
31	H11-30	Injection pressure 3 in multi-pressure injection	-	0.5	MPa	Real time	Real time
32	H11-31	Injection pressure 4 in multi-pressure injection	-	0.5	MPa	Real time	Real time
33	H11-32	Injection pressure 5 in multi-pressure injection	-	0.5	MPa	Real time	Real time
34	H11-33	Injection speed 1 in multi-speed injection	-	10.0	mm/s	Real time	Real time
35	H11-34	Injection speed 2 in multi-speed injection	-	10.0	mm/s	Real time	Real time
36	H11-35	Injection speed 3 in multi-speed injection	-	10.0	mm/s	Real time	Real time
37	H11-36	Injection speed 4 in multi-speed injection	-	10.0	mm/s	Real time	Real time
38	H11-37	Injection speed 5 in multi-speed injection	-	10.0	mm/s	Real time	Real time
39	H11-38	Pressure-holding pressure 1 in multi-pressure holing	-	5.0	MPa	Real time	Real time
40	H11-39	Pressure-holding pressure 2 in multi-pressure holing	-	5.0	MPa	Real time	Real time
41	H11-40	Pressure-holding pressure 3 in multi-pressure holing	-	5.0	MPa	Real time	Real time
42	H11-41	Pressure-holding pressure 4 in multi-pressure holing	-	5.0	MPa	Real time	Real time
43	H11-42	Pressure-holding pressure 5 in multi-pressure holing	-	5.0	MPa	Real time	Real time
44	H11-43	Pressure holding time 1 in multi-time pressure holding	-	0.00	s	Real time	Real time
45	H11-44	Pressure holding time 2 in multi-time pressure holding	-	0.00	s	Real time	Real time
46	H11-45	Pressure holding time 3 in multi-time pressure holding	-	0.00	s	Real time	Real time

Index code (decimal)	Param.	Function	Value range	Default	Unit	Change method	Effective mode
47	H11-46	Pressure holding time 4 in multi-time pressure holding	-	0.00	s	Real time	Real time
48	H11-47	Pressure holding time 5 in multi-time pressure holding	-	0.00	s	Real time	Real time
49	H11-48	Pressure holding speed 1 (pressure holding speed limit)	-	0.0	mm/s	Real time	Real time
50	H11-49	Charging position (charging position 1)	-	85.00	mm	Real time	Real time
51	H11-50	Charging position (charging position 2)	-	0.00	mm	Real time	Real time
52	H11-51	Charging position (charging position 3)	-	0.00	mm	Real time	Real time
53	H11-52	Charging position (charging position 4)	-	0.00	mm	Real time	Real time
54	H11-53	Charging position (charging position 5)	-	0.00	mm	Real time	Real time
55	H11-54	Charging back pressure (charging back pressure 1)	-	0.5	MPa	Real time	Real time
56	H11-55	Charging back pressure (charging back pressure 2)	-	0.5	MPa	Real time	Real time
57	H11-56	Charging back pressure (charging back pressure 3)	-	0.5	MPa	Real time	Real time
58	H11-57	Charging back pressure (charging back pressure 4)	-	0.5	MPa	Real time	Real time
59	H11-58	Charging back pressure (charging back pressure 5)	-	0.5	MPa	Real time	Real time
60	H11-59	Back pressure speed limit (forward speed limit)	-	10.0	mm/s	Real time	Real time
61	H11-60	Back pressure speed limit (backward speed limit)	-	10.0	mm/s	Real time	Real time

Index code (decimal)	Param.	Function	Value range	Default	Unit	Change method	Effective mode
62	H11-61	Pressure gain for deactivating protection	-	80.0	%	Real time	Real time
63	H11-62	Multi-pressure control enable	-	0	-	Real time	Real time
64	H11-63	Zero pressure filling time	-	0.000	s	Real time	Real time
65	H11-64	Pressure holding switchover pressure (pressure holding switchover state)	-	0.0	MPa	Read-only	-
66	H11-65	Pre-charging injection retract position	-	5.00	mm	Real time	Real time
67	H11-66	Post-charging injection retract position	-	85.00	mm	Real time	Real time
68	H11-67	Pre-charging injection retract speed	-	10.0	mm/s	Real time	Real time
69	H11-68	Post-charging injection retract speed	-	10.0	mm/s	Real time	Real time
70	H11-69	Motor side teeth count	-	36	-	Real time	Real time
71	H11-70	Screw side teeth count	-	36	-	Real time	Real time
72	H11-71	Screw lead	-	16.00	-	Real time	Real time
73	H11-72	Homing completion flag big	-	0	-	Read-only	-
74	H11-73	Pressure-unlimited displacement	-	0.00	mm	Real time	Real time
75	H11-74	Current position as the home	0: Unchanged • 0: Unchanged • 1: The current position is used as the home.	0	-	Real time	Real time
76	H11-75	Screw position	-	0.00	mm	Read-only	-
78	H11-77	Injection time display	-	0.000	s	Read-only	-
79	H11-78	Pressure holding time display	-	0.000	s	Read-only	-
80	H11-79	Charging time display	-	0.000	s	Read-only	-
81	H11-80	Injection retract time display	-	0.000	s	Read-only	-

Index code (decimal)	Param.	Function	Value range	Default	Unit	Change method	Effective mode
82	H11-81	S-curve ramp-up jerk up percentage (percentage to the total ramp-up time)	-	30	%	Real time	Real time
83	H11-82	S-curve ramp-up jerk down percentage (percentage to the total ramp-up time)	-	30	%	Real time	Real time
84	H11-83	S-curve ramp-down jerk up percentage (percentage to the total ramp-down time)	-	30	%	Real time	Real time
85	H11-84	S-curve ramp-down jerk down percentage (percentage to the total ramp-down time)	-	30	%	Real time	Real time
86	H11-85	Switchover pressure protection gain	-	20.0	%	Real time	Real time
87	H11-86	Injection S-curve jerk up percentage	-	30	%	Real time	Real time
88	H11-87	Pressure relief reference time after pressure holding completion	-	0.050	s	Real time	Real time
89	H11-88	Injection pressure display	-	0.00	%	Read-only	-
90	H11-89	Pressure holding switchover position display	-	0.00	mm	Read-only	-
91	H11-90	Pressure holding switchover pressure display	-	0.00	MPa	Read-only	-
92	H11-91	Injection screw speed display	-	0.0	mm/s	Read-only	-
93	H11-92	Pressure holding switchover deceleration point display	-	0.00	mm	Read-only	-
94	H11-93	Detection start position for switching from pressure mode to pressure holding mode	-	10.00	mm	Real time	Real time

Index code (decimal)	Param.	Function	Value range	Default	Unit	Change method	Effective mode
95	H11-94	Maximum injection speed display	-	900.0	mm/s	Read-only	-
96	H11-95	Pressure holding switchover speed display	-	0.0	rpm	Read-only	-
97	H11-96	Minimum injection position display	-	0.00	mm	Read-only	-
98	H11-97	Percentage of speed upper limit in pressure protection	-	0	%	Real time	Real time
99	H11-98	Smoothing the switchover speed of electric injection pressure loop	-	0	-	Real time	Real time

12.3.17 H12 Multi-Reference (Speed) Parameters

Index code (decimal)	Param.	Function	Value range	Default	Unit	Change method	Effective mode
1	H12-00	Injection multi-position 1 (pre-injection)	-	85.00	mm	Real time	Real time
2	H12-01	Injection multi-position 2 (pre-injection)	-	80.00	mm	Real time	Real time
3	H12-02	Injection multi-position 3 (pre-injection)	-	75.00	mm	Real time	Real time
4	H12-03	Injection multi-position 4 (pre-injection)	-	65.00	mm	Real time	Real time
5	H12-04	Injection multi-position 5 (pre-injection)	-	60.00	mm	Real time	Real time
6	H12-05	Injection multi-speed 1 (pre-injection)	-	10.0	mm/s	Real time	Real time
7	H12-06	Injection multi-speed 2 (pre-injection)	-	10.0	mm/s	Real time	Real time
8	H12-07	Injection multi-speed 3 (pre-injection)	-	10.0	mm/s	Real time	Real time
9	H12-08	Injection multi-speed 4 (pre-injection)	-	10.0	mm/s	Real time	Real time
10	H12-09	Injection multi-speed 5 (pre-injection)	-	10.0	mm/s	Real time	Real time
11	H12-10	Protection pressure (pre-injection)	-	0.5	Mpa	Real time	Real time
12	H12-11	Injection time (pre-injection)	-	0.000	s	Real time	Real time
13	H12-12	Pressure loop PID injection pressure loop Kp	-	2.100	-	Real time	Real time

Index code (decimal)	Param.	Function	Value range	Default	Unit	Change method	Effective mode
14	H12-13	Pressure loop PID injection pressure loop Ki	-	0.200	-	Real time	Real time
15	H12-14	Pressure loop PID injection pressure loop Kd	-	0.000	-	Real time	Real time
16	H12-15	Pressure loop PID pressure holding pressure loop Kp	-	2.100	-	Real time	Real time
17	H12-16	Pressure loop PID pressure holding pressure loop Ki	-	0.200	-	Real time	Real time
18	H12-17	Pressure loop PID pressure holding pressure loop Kd	-	0.000	-	Real time	Real time
19	H12-18	Pressure loop PID back pressure loop Kp	-	2.100	-	Real time	Real time
20	H12-19	Pressure loop PID back pressure loop Ki	-	0.200	-	Real time	Real time
0: 00	H12-20	Pressure loop PID back pressure loop Kd	-	0.000	-	Real time	Real time
22	H12-21	Injection end position (pre-injection)	-	20.00	mm	Real time	Real time
23	H12-22	Starting slope of injection pressure reference	-	0.100	s	Real time	Real time
24	H12-23	Injection pressure reference switchover slope	-	0.100	s	Real time	Real time
25	H12-24	Injection pressure reference end slop	-	0.100	s	Real time	Real time
26	H12-25	Starting slope of pressure holding reference	-	0.100	s	Real time	Real time
27	H12-26	Pressure holding reference switchover slope	-	0.100	s	Real time	Real time
28	H12-27	Pressure holding reference end slope	-	0.100	s	Real time	Real time
29	H12-28	Starting slope of back pressure reference	-	0.100	s	Real time	Real time
30	H12-29	Back pressure reference switchover slope	-	0.100	s	Real time	Real time
31	H12-30	Back pressure reference end slope	-	0.100	s	Real time	Real time
32	H12-31	Starting slope of injection speed reference	-	0.050	s	Real time	Real time
33	H12-32	Injection speed reference switchover slope	-	0.050	s	Real time	Real time

Index code (decimal)	Param.	Function	Value range	Default	Unit	Change method	Effective mode
34	H12-33	Starting slope of retraction speed reference	-	0.050	s	Real time	Real time
35	H12-34	End slope of retraction speed reference	-	0.050	s	Real time	Real time
36	H12-35	Number of injection segments (pre-injection)	-	1	-	Real time	Real time
37	H12-36	Pressure reference ramp-up S-curve filter time	-	0.000	s	Real time	Real time
38	H12-37	Pressure reference ramp-down S-curve filter time	-	0.000	s	Real time	Real time
39	H12-38	Pressure protection speed ramp-up time	-	0.000	s	Real time	Real time
40	H12-39	Pressure protection speed ramp-down time	-	0.000	s	Real time	Real time
41	H12-40	Charging retract end slope	-	0.200	s	Real time	Real time
42	H12-41	End slope of injection speed reference	-	0.100	s	Real time	Real time
43	H12-42	Charging retract start slope	-	10.0	s	Real time	Real time
44	H12-43	Number of injection segments	-	1	-	Real time	Real time
45	H12-44	Number of pressure holding segments	-	1	-	Real time	Real time
46	H12-45	Number of back pressure segments	-	1	-	Real time	Real time
47	H12-46	Number of mold opening segments	-	1	-	Real time	Real time
48	H12-47	Number of mold closing segments	-	3	-	Real time	Real time
49	H12-48	Number of ejection segments	-	1	-	Real time	Real time
50	H12-49	Number of ejection retract segments	-	1	-	Real time	Real time
51	H12-50	Number of initial ejection segments	-	0	-	Real time	Real time
52	H12-51	Number of initial ejection retract segments	-	0	-	Real time	Real time
53	H12-52	Pressure holding speed ramp-up time	-	0.000	s	Real time	Real time
54	H12-53	Pressure holding speed ramp-down time	-	0.000	s	Real time	Real time
55	H12-54	Pre-charging injection retract position reference type	• 0: Relative • 1: Absolute	0	-	Real time	Real time

Index code (decimal)	Param.	Function	Value range	Default	Unit	Change method	Effective mode
56	H12-55	Action completion flag	-	0	-	Read-only	-
57	H12-56	In-position error threshold	-	0.01	-	Real time	Real time
58	H12-57	Pressure relief speed limit	-	0.0	-	Real time	Real time
62	H12-61	Pressure holding speed 2 (pressure holding speed limit)	-	0.0	rpm	Real time	Real time
63	H12-62	Pressure holding speed 3 (pressure holding speed limit)	-	0.0	rpm	Real time	Real time
64	H12-63	Pressure holding speed 4 (pressure holding speed limit)	-	0.0	rpm	Real time	Real time
65	H12-64	Pressure holding speed 5 (pressure holding speed limit)	-	0.0	rpm	Real time	Real time
66	H12-65	Lower limit of global mold protection torque deviation (low-pressure mold protection)	-	0	%	Real time	Real time
67	H12-66	Upper limit of global mold protection torque deviation (low-pressure mold protection)	-	0	%	Real time	Real time
68	H12-67	Valid length (low-pressure mold protection)	-	8192	-	Real time	Real time
69	H12-68	Low-pressure mold protection filter time constant	-	2.00	s	Real time	Real time

12.3.18 H15 Mold-Open/Close Parameters

Index code (decimal)	Param.	Function	Value range	Default	Unit	Change method	Effective mode
1	H15-00	Multi-position 1 in mold opening (low-order 16 bits)	-	0.00	mm	Real time	Real time
2	H15-01	Multi-position 1 in mold opening (high-order 16 bits)	-	0	mm	Real time	Real time
3	H15-02	Multi-position 2 in mold opening (low-order 16 bits)	-	0.00	mm	Real time	Real time
4	H15-03	Multi-position 2 in mold opening (high-order 16 bits)	-	0	mm	Real time	Real time
5	H15-04	Multi-position 3 in mold opening (low-order 16 bits)	-	0.00	mm	Real time	Real time

Index code (decimal)	Param.	Function	Value range	Default	Unit	Change method	Effective mode
6	H15-05	Multi-position 3 in mold opening (high-order 16 bits)	-	0	mm	Real time	Real time
7	H15-06	Multi-position 4 in mold opening (low-order 16 bits)	-	0.00	mm	Real time	Real time
8	H15-07	Multi-position 4 in mold opening (high-order 16 bits)	-	0	mm	Real time	Real time
9	H15-08	Multi-position 5 in mold opening (low-order 16 bits)	-	0.00	mm	Real time	Real time
10	H15-09	Multi-position 5 in mold opening (high-order 16 bits)	-	0	mm	Real time	Real time
11	H15-10	Multi-speed 1 in mold opening	-	0.0	%	Real time	Real time
12	H15-11	Multi-speed 2 in mold opening	-	0.0	%	Real time	Real time
13	H15-12	Multi-speed 3 in mold opening	-	0.0	%	Real time	Real time
14	H15-13	Multi-speed 4 in mold opening	-	0.0	%	Real time	Real time
15	H15-14	Multi-speed 5 in mold opening	-	0.0	%	Real time	Real time
16	H15-15	Multi-position reference ramp-up time in mold opening	-	0.150	s	Real time	Real time
17	H15-16	Multi-position reference switchover time in mold opening	-	0.150	s	Real time	Real time
18	H15-17	Multi-position reference ramp-down time in mold opening	-	0.150	s	Real time	Real time
19	H15-18	Multi-position 1 in mold closing (low-order 16 bits)	-	0.00	mm	Real time	Real time
20	H15-19	Multi-position 1 in mold closing (high-order 16 bits)	-	0	mm	Real time	Real time
21	H15-20	Multi-position 2 in mold closing (low-order 16 bits)	-	0.00	mm	Real time	Real time
22	H15-21	Multi-position 2 in mold closing (high-order 16 bits)	-	0	mm	Real time	Real time
23	H15-22	Multi-position 3 in mold closing (low-order 16 bits)	-	0.00	mm	Real time	Real time
24	H15-23	Multi-position 3 in mold closing (high-order 16 bits)	-	0	mm	Real time	Real time
25	H15-24	Multi-position 4 in mold closing (low-order 16 bits)	-	0.00	mm	Real time	Real time
26	H15-25	Multi-position 4 in mold closing (high-order 16 bits)	-	0	mm	Real time	Real time
27	H15-26	Multi-position 5 in mold closing (low-order 16 bits)	-	0.00	mm	Real time	Real time

Index code (decimal)	Param.	Function	Value range	Default	Unit	Change method	Effective mode
28	H15-27	Multi-position 5 in mold closing (high-order 16 bits)	-	0	mm	Real time	Real time
29	H15-28	Multi-speed 1 in mold-closing	-	0.0	%	Real time	Real time
30	H15-29	Multi-speed 2 in mold-closing	-	0.0	%	Real time	Real time
31	H15-30	Multi-speed 3 in mold-closing	-	0.0	%	Real time	Real time
32	H15-31	Multi-speed 4 in mold-closing	-	0.0	%	Real time	Real time
33	H15-32	Multi-speed 5 in mold-closing	-	0.0	%	Real time	Real time
34	H15-33	Multi-position reference ramp-up time in mold closing	-	0.150	s	Real time	Real time
35	H15-34	Multi-position reference switchover time in mold closing	-	0.150	s	Real time	Real time
36	H15-35	Multi-position reference ramp-down time in mold closing	-	0.150	s	Real time	Real time
37	H15-36	High-pressure torque in mold closing	-	300.0	%	Real time	Real time
38	H15-37	Low-pressure torque in mold closing	-	150.0	%	Real time	Real time
39	H15-38	Slow torque in mold opening 1	-	100.0	%	Real time	Real time
40	H15-39	Slow protection time in mold opening 1	-	0.000	s	Real time	Real time
41	H15-40	High-pressure protection time in mold closing	-	0.000	s	Real time	Real time
42	H15-41	Low-pressure protection time in mold closing	-	0.000	s	Real time	Real time
43	H15-42	Mold opening timer	-	0.000	s	Read-only	-
44	H15-43	Mold closing timer	-	0.000	s	Read-only	-
45	H15-44	High-pressure protection timer in mold closing	-	0.000	s	Read-only	-
46	H15-45	Low-pressure protection timer in mold closing	-	0.000	s	Read-only	-
47	H15-46	Minimum error distance between segments	-	20.00	mm	Real time	Real time

Index code (decimal)	Param.	Function	Value range	Default	Unit	Change method	Effective mode
48	H15-47	Change time of torque limit from low pressure to high pressure in mold closing	-	0.000	s	Real time	Real time
49	H15-48	Deceleration slope selection	• 0: Original solution, shorten the deceleration distance • 1: Linked-ramp modification, shorten the acceleration distance	-	-	-	-

12.3.19 H18 Ejector Pin Parameters

Index code (decimal)	Param.	Function	Value range	Default	Unit	Change method	Effective mode
9	H18-08	Ejector pin motion mode	• 0: Reserved • 1: Fixed count • 2: Vibration	0	-	Real time	Real time
10	H18-09	Ejector pin count	-	1	-	Real time	Real time
11	H18-10	Ejector pin vibration mode	-	0	-	Real time	Real time
12	H18-11	Ejector pin vibration time	-	0.00	s	Read-only	-
13	H18-12	Ejector pin vibration distance	-	0.00	mm	Real time	Real time
14	H18-13	Ejection delay mode	-	0	-	Real time	Real time
15	H18-14	Ejection delay time	-	0.000	s	Real time	Real time
16	H18-15	Ejection multi-position 1	-	0.00	mm	Real time	Real time
17	H18-16	Ejection multi-position 2	-	0.00	mm	Real time	Real time
18	H18-17	Ejection multi-position 3	-	0.00	mm	Real time	Real time
19	H18-18	Initial ejection multi-position 1	-	0.00	mm	Real time	Real time
20	H18-19	Initial ejection multi-position 2	-	0.00	mm	Real time	Real time
21	H18-20	Injection multi-speed 1	-	0.0	%	Real time	Real time
22	H18-21	Injection multi-speed 2	-	0.0	%	Real time	Real time

Index code (decimal)	Param.	Function	Value range	Default	Unit	Change method	Effective mode
23	H18-22	Injection multi-speed 3	-	0.0	%	Real time	Real time
24	H18-23	Initial ejection multi-speed 1	-	0.0	%	Real time	Real time
25	H18-24	Initial ejection multi-speed 2	-	0.0	%	Real time	Real time
26	H18-25	Ejection multi-position reference ramp-up time	-	0.150	s	Real time	Real time
27	H18-26	Switchover time of ejection multi-position reference	-	0.150	s	Real time	Real time
28	H18-27	Ejection multi-position reference ramp-down time	-	0.150	s	Real time	Real time
29	H18-28	Ejection retract delay mode	-	0	-	Real time	Real time
30	H18-29	Ejection retract delay time	-	0.000	s	Real time	Real time
31	H18-30	Multi-position 1 in ejection retract	-	0.00	mm	Real time	Real time
32	H18-31	Multi-position 2 in ejection retract	-	0.00	mm	Real time	Real time
33	H18-32	Multi-position 3 in ejection retract	-	0.00	mm	Real time	Real time
34	H18-33	Multi-position 1 in initial ejection retract	-	0.00	mm	Real time	Real time
35	H18-34	Multi-position 2 in initial ejection retract	-	0.00	mm	Real time	Real time
36	H18-35	Multi-speed 1 in ejection retract	-	0.0	%	Real time	Real time
37	H18-36	Multi-speed 2 in ejection retract	-	0.0	%	Real time	Real time
38	H18-37	Multi-speed 3 in ejection retract	-	0.0	%	Real time	Real time
39	H18-38	Multi-speed 1 in initial ejection retract	-	0.0	%	Real time	Real time
40	H18-39	Multi-speed 2 in initial ejection retract	-	0.0	%	Real time	Real time
41	H18-40	Multi-position reference ramp-up time in ejection retract	-	0.150	s	Real time	Real time
42	H18-41	Multi-position reference switchover time in ejection retract	-	0.150	s	Real time	Real time
43	H18-42	Multi-position reference ramp-down time in ejection retract	-	0.150	s	Real time	Real time
44	H18-43	Ejector pin vibration reference ramp-up time	-	0.003	s	Real time	Real time
45	H18-44	Ejector pin vibration reference ramp-down time	-	0.003	s	Real time	Real time
46	H18-45	Ejector pin action time	-	0.000	s	Real time	Real time

Index code (decimal)	Param.	Function	Value range	Default	Unit	Change method	Effective mode
47	H18-46	Injection torque control	This function is enabled at non-zero setpoints. The 044 alarm is masked during the process. 11-85 is 100%.	0	%	Real time	Real time
49	H18-48	Open circuit detection current lower limit of melt-pressure sensor	-	50	%	At stop	Real time

12.3.20 H19 Hydraulic Pressure Control Parameters

Index code (decimal)	Param.	Function	Value range	Default	Unit	Change method	Effective mode
1	H19-00	Hydraulic pressure control mode	• 0: EtherCAT • 1: EtherCAT • 2: Analog reference • 3: EtherCAT • 4: EtherCAT • 5: EtherCAT • 6: CANopen	0	-	At stop	Real time
2	H19-01	Maximum speed	-	2000	rpm	At stop	Real time
3	H19-02	System hydraulic pressure	-	175.0	bar	At stop	Real time
4	H19-03	Maximum hydraulic pressure	-	250.0	bar	At stop	Real time
5	H19-04	1st group of hydraulic pressure reference ramp-up time	-	0.125	s	Real time	Real time
6	H19-05	1st group of hydraulic pressure control Kp	-	210.0	-	Real time	Real time
7	H19-06	1st group of hydraulic pressure control Ti	-	0.040	-	Real time	Real time
8	H19-07	1st group of hydraulic pressure control Td	-	0.000	-	Real time	Real time
9	H19-08	Maximum negative speed	-	10.0	%	Real time	Real time
10	H19-09	Bottom flow	-	0.5	%	Real time	Real time
11	H19-10	Bottom pressure	-	0.5	bar	Real time	Real time
12	H19-11	2nd group of hydraulic pressure control Kp	-	310.0	-	Real time	Real time

Index code (decimal)	Param.	Function	Value range	Default	Unit	Change method	Effective mode
13	H19-12	2nd group of hydraulic pressure control Ti	-	0.200	-	Real time	Real time
14	H19-13	2nd group of hydraulic pressure control Td	-	0.000	-	Real time	Real time
15	H19-14	3rd group of hydraulic pressure control Kp	-	210.0	-	Real time	Real time
16	H19-15	3rd group of hydraulic pressure control Ti	-	0.100	-	Real time	Real time
17	H19-16	3rd group of hydraulic pressure control Td	-	0.000	-	Real time	Real time
18	H19-17	4th group of hydraulic pressure control Kp	-	210	-	Real time	Real time
19	H19-18	4th group of hydraulic pressure control Ti	-	0.100	-	Real time	Real time
20	H19-19	4th group of hydraulic pressure control Td	-	0.000	-	Real time	Real time
21	H19-20	Maximum torque at zero speed in multi-pump mode	-	0.0	%	Real time	Real time
22	H19-21	Hydraulic pressure sensor pressure signal fault detection time	-	0.300	s	Real time	Real time
23	H19-22	Lower limit of pressure sensor fault detection current - Injection pressure holding	-	100	%	At stop	Real time
24	H19-23	Speed upper limit of pressure sensor fault detection	-	100	%	At stop	Real time
25	H19-24	Hydraulic pressure error integral limit	-	5000		Real time	Real time
26	H19-25	1st group of hydraulic pressure reference ramp-up S-curve filter time	-	0.001	s	Real time	Real time
27	H19-26	1st group of hydraulic pressure reference ramp-down S-curve filter time	-	0.001	s	Real time	Real time

Index code (decimal)	Param.	Function	Value range	Default	Unit	Change method	Effective mode
28	H19-27	1st group of hydraulic pressure overshoot suppression detection level	-	200	-	Real time	Real time
29	H19-28	1st group of hydraulic pressure overshoot suppression factor	-	200	-	Real time	Real time
30	H19-29	Hydraulic pressure loop gain factor of injection molding machine	-	10.0	-	Real time	Real time
31	H19-30	Torque upper limit for switching from hydraulic pressure mode to speed mode	-	160.0	-	Real time	Real time
32	H19-31	Delay of 1st group of hydraulic pressure references	-	0.000	s	Real time	Real time
33	H19-32	Minimum input of injection molding machine slave	-	10.0	-	Real time	Real time
34	H19-33	Corresponding setting of minimum input of injection molding machine slave	-	0.0	-	Real time	Real time
35	H19-34	Midpoint input of injection molding machine slave	-	20.0	-	Real time	Real time
36	H19-35	Corresponding setting of the midpoint of injection molding machine slave	-	20.0	-	Real time	Real time
37	H19-36	Maximum input of injection molding machine slave	-	100.0	-	Real time	Real time
38	H19-37	Corresponding setting of the maximum input of injection molding machine slave	-	100.0	-	Real time	Real time
44	H19-43	Pressure deviation of a non-operating slave pump in multi-pump CAN communication mode	-	5.0	-	Real time	Real time
45	H19-44	Flow lower limit of a non-operating slave pump in multi-pump CAN communication mode	-	10.0	-	Real time	Real time

Index code (decimal)	Param.	Function	Value range	Default	Unit	Change method	Effective mode
46	H19-45	Stop delay when the slave pump receives no speed reference	-	1.000	-	Real time	Real time
47	H19-46	Time for decelerating to stop when the slave pump receives no speed reference	-	0.200	s	Real time	Real time
48	H19-47	Pressure sensor open circuit detection voltage	-	0.000	V	Real time	Real time
49	H19-48	Keiki integral calculation factor	-	0.06	-	Real time	Real time

12.3.21 H1A Hydraulic Pressure Control Parameters

Index code (decimal)	Param.	Function	Value range	Default	Unit	Change method	Effective mode
1	H1A-00	Speed reference filter time	-	0.002	s	Real time	Real time
2	H1A-01	Pressure difference for stopping pressure loop adjustment	-	0.05	-	Real time	Real time
3	H1A-02	1st group of hydraulic pressure reference ramp-down time	-	0.150	s	Real time	Real time
4	H1A-03	1st group of flow ramp-up time	-	0.030	s	Real time	Real time
5	H1A-04	1st group of flow ramp-down time	-	0.030	s	Real time	Real time
6	H1A-05	Multi-PID selection	-	0	-	Real time	Real time
7	H1A-06	Pump flow compensation	-	0	-	Real time	Real time
8	H1A-07	Pressure stability threshold	-	0	-	Real time	Real time
9	H1A-08	Minimum relief pressure in reverse run (zero speed applied for pressure lower than this setpoint)	-	0.0	-	Real time	Real time
10	H1A-09	Maximum allowable time of pressure relief in reverse run (ER63 reported if timeout)	-	0.000	-	Real time	Real time
11	H1A-10	2nd group hydraulic pressure reference ramp-up S-curve filter time	-	0.001	s	Real time	Real time
12	H1A-11	2nd group hydraulic pressure reference ramp-down S-curve filter time	-	0.001	s	Real time	Real time
13	H1A-12	2nd group of flow reference ramp-up time	-	0.030	s	Real time	Real time
14	H1A-13	2nd group of flow reference ramp-down time	-	0.100	s	Real time	Real time

Index code (decimal)	Param.	Function	Value range	Default	Unit	Change method	Effective mode
15	H1A-14	2nd group of hydraulic pressure reference ramp-up time	-	0.125	s	Real time	Real time
16	H1A-15	2nd group of hydraulic pressure reference ramp-down time	-	0.150	s	Real time	Real time
17	H1A-16	2nd group of hydraulic pressure overshoot suppression detection level	-	200	-	Real time	Real time
18	H1A-17	2nd group of hydraulic pressure overshoot suppression factor	-	50	-	Real time	Real time
19	H1A-18	Delay of 2nd group of hydraulic pressure references	-	0.000	s	Real time	Real time
20	H1A-19	Swashplate switchover flow setting	-	100	%	Real time	Real time
21	H1A-20	Swashplate switchover hydraulic pressure setting	-	5.0	%	Real time	Real time
22	H1A-21	Swashplate switchover delay	-	10.0	-	Real time	Real time
23	H1A-22	Hydraulic pressure deviation threshold for deactivating hydraulic pressure suppression	-	100	-	Real time	Real time
24	H1A-23	Maximum value of integral limit deviation	-	450	-	Real time	Real time
25	H1A-24	Integral limit mode selection	-	0	-	Real time	Real time
26	H1A-25	Pressure loop output upper limit increment	-	20	-	Real time	Real time
27	H1A-26	Hydraulic pressure PID algorithm selection	-	3	-	Real time	Real time
29	H1A-28	Pressure stabilization integral factor	-	0	-	Real time	Real time
30	H1A-29	1st group of impact overshoot suppression pressure feedback and reference percentage threshold	-	700	-	Real time	Real time
31	H1A-30	1st group of impact overshoot suppression factor Kd	-	40	-	Real time	Real time
32	H1A-31	2nd group of impact overshoot suppression pressure feedback and reference percentage threshold	-	700	-	Real time	Real time
33	H1A-32	2nd group of impact overshoot suppression factor Kd	-	40	-	Real time	Real time
34	H1A-33	AI1 minimum input	-	0.02	V	Real time	Real time

Index code (decimal)	Param.	Function	Value range	Default	Unit	Change method	Effective mode
35	H1A-34	Corresponding setting of AI1 minimum input	-	0.0	%	Real time	Real time
36	H1A-35	Maximum input of AI1	-	10.00	V	Real time	Real time
37	H1A-36	Corresponding setting of AI1 maximum input	-	100.0	%	Real time	Real time
38	H1A-37	AI1 filter time	-	0.010	s	Real time	Real time
39	H1A-38	Minimum input of AI2	-	0.02	V	Real time	Real time
40	H1A-39	Corresponding setting of AI2 minimum input	-	0.0	%	Real time	Real time
41	H1A-40	Maximum input of AI2	-	10.00	V	Real time	Real time
42	H1A-41	Corresponding setting of AI2 maximum input	-	100.0	%	Real time	Real time
43	H1A-42	AI2 filter time	-	0.005	s	Real time	Real time
44	H1A-43	Minimum input of AI3	-	0.02	V	Real time	Real time
45	H1A-44	Corresponding setting of AI3 minimum input	-	0.0	%	Real time	Real time
46	H1A-45	Maximum input of AI3	-	10.00	V	Real time	Real time
47	H1A-46	Corresponding setting of AI3 maximum input	-	100.0	%	Real time	Real time
48	H1A-47	AI3 filter time	-	0.000	s	Real time	Real time
49	H1A-48	Pressure feedback filter time	-	0.005	s	Real time	Real time

12.3.22 H1B Overload Test Parameters

Index code (decimal)	Param.	Function	Value range	Default	Unit	Change method	Effective mode
1	H1B-00	Pressure reference sent via ECAT	-	0.0	kg	Real time	Real time
2	H1B-01	Flow reference sent via ECAT	-	0.0	%	Real time	Real time
3	H1B-02	ECAT single/multi-pump control word	-	0	-	Real time	Real time
4	H1B-03	ECAT slave pump configuration (high-order bit)	-	0	-	Real time	Real time
5	H1B-04	ECAT slave pump configuration (low-order bit)	-	0	-	Real time	Real time
6	H1B-05	Hydraulic pressure feedback (display)	-	0.0	-	Read-only	-
7	H1B-06	Hydraulic pressure feedback (sent via the host controller)	-	0.0	-	Real time	Real time
8	H1B-07	Slave pump rotation speed reference (from master pump)	-	0.0	-	Real time	Real time

Index code (decimal)	Param.	Function	Value range	Default	Unit	Change method	Effective mode
9	H1B-08	Slave pump speed reference sent by master pump (display)	-	0.0	-	Read-only	-
10	H1B-09	Motor direction of rotation	-	1	-	Real time	Real time
11	H1B-10	Runaway fault judgment time	-	0.0	s	Real time	Real time
12	H1B-11	Runaway speed deviation setting	-	10.00	-	Real time	Real time
47	H1B-46	Runaway protection judgment time upon incorrect phase sequence	-	30	-	At stop	Real time

13 Appendix B: Rectifier Unit Parameters

13.1 F0 Basic Rectifier Parameters

Param.	Comm. address	Name	Setpoint	Default value	Change mode
F0-00	0xF000	Module type	• 1: Inverter module • 2: Rectifier module	2	Read-only
F0-01	0xF001	Product code	-	810	Read-only
F0-02	0xF002	Software version	0.00 to 655.35	0.00	Read-only
F0-03	0xF003	Temporary software version	0.00 to 655.35	0.00	Read-only
F0-04	0xF004	Custom code	0 to 9999	0	Read-only

13.2 F1 Basic Function Parameters

Param.	Comm. address	Name	Setpoint	Default value	Change mode
F1-00	0xF100	Undervoltage threshold	300 V to 500 V	350 V	Real time
F1-01	0xF101	Bus overvoltage threshold	700 V to 850 V	820 V	Real time
F1-02	0xF102	Voltage threshold for activating braking unit	700 V to 800 V	760 V	Real time
F1-03	0xF103	Reserved	-	0	Read-only
F1-04	0xF104	Reserved	-	0	Read-only
F1-05	0xF105	Reserved	-	0	Read-only
F1-06	0xF106	Usr correction coefficient	80.0% to 140.0%	100.00%	Real time
F1-07	0xF107	Ust correction coefficient	80.0% to 140.0%	100.00%	Real time
F1-08	0xF108	Utr correction coefficient	80.0% to 140.0%	100.00%	Real time
F1-09	0xF109	Fan control mode	0: Automatic running • The fan starts when temperature is above 45℃. • The fan stops when temperature is below 40℃. 1: Always running	1	Real time
F1-10	0xF10A	Braking unit fault protection enable	0: Inactive 1: Active • Ones: Braking transistor shoot-through (enabled forcibly) • Tens: Braking transistor overcurrent (enabled forcibly) • Hundreds: Braking transistor overload (enabled forcibly)	111	Read-only

Param.	Comm. address	Name	Setpoint	Default value	Change mode
F1-11	0xF10B	Protection of abnormal three-phase input	0: Inactive 1: Active • Ones: Input phase loss • Tens: Three-phase input voltage too high • Hundreds: Three-phase input voltage unbalance	111	Real time
F1-12	0xF10C	Reserved	-	0	Read-only
F1-13	0xF10D	Communication error protection enable	• 0: Inactive • 1: Active	1	Read-only
F1-14	0xF10E	Module overtemperature protection enable	0: Inactive 1: Active • Ones: Module overtemperature fault (enabled forcibly) • Tens: Module overtemperature pre-alarm (enabled forcibly)	11	Read-only
F1-15	0xF10F	EEPROM fault protection enable	• 0: Inactive • 1: Active	1	Read-only
F1-16	0xF110	Reserved	-	0	Read-only
F1-17	0xF111	Rectifier and inverter communication error protection enable	• 0: Inactive • 1: Active	1	Real time
F1-18	0xF112	Waiting time upon rectifier and inverter communication timeout	1.00s to 20.00s	5.00s	Real time

13.3 F2 Information Exchange Between Rectifier and Inverter

Param.	Comm. address	Name	Setpoint	Default value	Change mode
F2-00	0xF200	Inverter protective action upon excessively high grid voltage	• 1: Run • 2: Coast to stop • 3: Stop in the set mode	2	Read-only
F2-01	0xF201	Inverter protective action upon excessively low grid voltage		1	Read-only
F2-02	0xF202	Inverter protective action upon three-phase unbalance		3	Read-only
F2-03	0xF203	Inverter protective action upon input phase loss		3	Read-only
F2-04	0xF204	Inverter protective action upon braking unit short circuit		2	Read-only
F2-05	0xF205	Inverter protective action upon braking unit overcurrent		1	Read-only
F2-06	0xF206	Inverter protective action upon braking unit overload		1	Read-only
F2-07	0xF207	Reserved		0	Read-only
F2-08	0xF208	Reserved		0	Read-only
F2-09	0xF209	Inverter protective action upon communication fault		1	Read-only
F2-10	0xF20A	Reserved		0	Read-only
F2-11	0xF20B	Inverter protective action upon EEPROM fault		3	Read-only
F2-12	0xF20C	Inverter protective action upon module overtemperature		2	Read-only
F2-13	0xF20D	Inverter protective action against module overtemperature pre-alarm		3	Real time
F2-14	0xF20E	Rectifier protective action upon excessively high grid voltage	• 0: Run • 1: Rectifier stop	1	Real time

13.4 F4 Input Terminals

Param.	Comm. address	Name	Setpoint	Default value	Change mode
F4-00	0xF400	DI1 function selection	• 0: Not assigned • 1: Operation enable • 2: Incoming breaker feedback • 3: Auxiliary breaker feedback • 4: Residual current circuit breaker feedback • 5: Reset fault • 6: Inverter unit operation inhibited • 7: Inverter unit coast to stop • 8: Inverter stopped based on the set mode	5	Real time
F4-01	0xF401	DI2 function selection		0	
F4-02	0xF402	DI3 function selection		0	
F4-03	0xF403	DI4 function selection		0	
F4-04	0xF404	DI5 function selection		0	
F4-05	0xF405	DI1 filter time	0.000 to 5.000	0.010s	Real time
F4-06	0xF406	DI2 filter time			
F4-07	0xF407	DI3 filter time			
F4-08	0xF408	DI4 filter time			
F4-09	0xF409	DI5 filter time			
F4-10	0xF40A	DI1 active delay	0.00s to 600.00s	0.00s	Real time
F4-11	0xF40B	DI2 active delay			
F4-12	0xF40C	DI3 active delay			
F4-13	0xF40D	DI4 active delay			
F4-14	0xF40E	DI5 active delay			
F4-15	0xF40F	DI1 inactive delay			
F4-16	0xF410	DI2 inactive delay			
F4-17	0xF411	DI3 inactive delay			
F4-18	0xF412	DI4 inactive delay			
F4-19	0xF413	DI5 inactive delay			
F4-20	0xF414	DI active mode selection	0: Active low 1: Active high • Ones: DI1 • Tens: DI2 • Hundreds: DI3 • Thousands: DI4 • Ten-thousands: DI5	0	Real time

13.5 F5 Output Terminals

Param.	Comm. address	Name	Setpoint	Default value	Change mode
F5-00	0xF500	RO1 output function selection	• 0: Not assigned • 1: Run • 2: Fault • 3: Alarm • 4: Trip • 5: Bus undervoltage • 6: Bus overvoltage • 7: Bus voltage normal • 11: Bus voltage abnormal • 12: Three-phase input abnormal • 13: Three-phase input normal • 14: Module overtemperature • 15: Module overtemperature pre-alarm	0	Real time
F5-03	0xF503	RO1 active delay	0.00s to 600.00s	0.00s	Real time
F5-04	0xF504	RO2 active delay			
F5-05	0xF505	RO3 active delay			
F5-06	0xF506	RO1 inactive delay	0.00s to 600.00s	0.00s	Real time
F5-07	0xF507	RO2 inactive delay			
F5-08	0xF508	RO3 inactive delay			
F5-09	0xF509	RO active state selection	0: Active high 1: Active low • Ones: RO1 • Tens: RO2 • Hundreds: RO3	0	Real time

13.6 FA Fault Log

Param.	Comm. address	Name	Setpoint	Default value	Change mode
FA-00	0xFA00	Fault code of the 5th fault (last fault)	0 to 99	0	Read-only
FA-01	0xFA01	Subcode of the 5th fault	0 to 99	0	Read-only
FA-02	0xFA02	Bus voltage upon the 5th fault	0.0 to 6553.5	0.0	Read-only
FA-03	0xFA03	Heatsink temperature upon the 5th fault	-20°C to +999 °C	0°C	Read-only
FA-04	0xFA04	Ambient temperature upon the 5th fault	-20°C to +999 °C	0°C	Read-only
FA-05	0xFA05	Braking circuit current upon the 5th fault	0.00 to 655.35	0.00 A	Read-only
FA-06	0xFA06	Grid voltage (Usr) upon the 5th fault	0 V to 9999 V	0 V	Read-only
FA-07	0xFA07	Grid voltage (Ust) upon the 5th fault	0 V to 9999 V	0 V	Read-only

Param.	Comm. address	Name	Setpoint	Default value	Change mode
FA-08	0xFA08	Grid voltage (Utr) upon the 5th fault	0 V to 9999 V	0 V	Read-only
FA-09	0xFA09	Three-phase unbalance factor upon the 5th fault	0.00% to 655.35%	0.00%	Read-only
FA-10	0xFA0A	DI status upon the 5th fault	0 to 65535	0	Read-only
FA-11	0xFA0B	RO state upon the 5th fault	0 to 65535	0	Read-only
FA-12	0xFA0C	Stop command sent by the rectifier upon the 5th fault	• 1: Run • 2: Coast to stop • 3: Stop in the set mode	0	Read-only
FA-13	0xFA0D	Total power-on time (in hours) upon the 5th fault	0 to 65535	0 h	Read-only
FA-14	0xFA0E	Total power-on time (in minutes) upon the 5th fault	0 to 65535	0 min	Read-only
FA-15	0xFA0F	Total power-on time (in seconds) upon the 5th fault	0s to 65535s	0s	Read-only
FA-20	0xFA14	Fault code of the 4th fault (2nd to last fault)	0 to 99	0	Read-only
FA-21	0xFA15	Subcode of the 4th fault	0 to 99	0	Read-only
FA-22	0xFA16	Bus voltage upon the 4th fault	0.0 to 6553.5	0.0	Read-only
FA-23	0xFA17	Heatsink temperature upon the 4th fault	0°C to 999 °C	0°C	Read-only
FA-24	0xFA18	Ambient temperature upon the 4th fault	0°C to 999 °C	0°C	Read-only
FA-25	0xFA19	Braking circuit current upon 4th fault	0.00 to 655.35	0.00 A	Read-only
FA-26	0xFA1A	Grid voltage (Usr) upon the 4th fault	0 V to 9999 V	0 V	Read-only
FA-27	0xFA1B	Grid voltage (Ust) upon the 4th fault	0 V to 9999 V	0 V	Read-only
FA-28	0xFA1C	Grid voltage (Utr) upon the 4th fault	0 V to 9999 V	0 V	Read-only
FA-29	0xFA1D	Three-phase unbalance factor upon 4th fault	0.00% to 655.35%	0.00%	Read-only
FA-30	0xFA1E	DI status upon the 4th fault	0 to 65535	0	Read-only
FA-31	0xFA1F	RO state upon the 4th fault	0 to 65535	0	Read-only
FA-32	0xFA20	Stop command sent by the rectifier upon the 4th fault	• 1: Run • 2: Coast to stop • 3: Stop in the set mode	0	Read-only
FA-33	0xFA21	Total power-on time (in hours) upon the 4th fault	0 to 65535	0 h	Read-only
FA-34	0xFA22	Total power-on time (in minutes) upon the 4th fault	0 to 65535	0 min	Read-only
FA-35	0xFA23	Total power-on time (in seconds) upon the 4th fault	0s to 65535s	0s	Read-only
FA-40	0xFA28	Fault code of the 3rd fault (3rd to last fault)	0 to 99	0	Read-only
FA-41	0xFA29	Subcode of the 3rd fault	0 to 99	0	Read-only
FA-42	0xFA2A	Bus voltage upon the 3rd fault	0.0 to 6553.5	0.0	Read-only

Param.	Comm. address	Name	Setpoint	Default value	Change mode
FA-43	0xFA2B	Heatsink temperature upon the 3rd fault	0°C to 999 °C	0°C	Read-only
FA-44	0xFA2C	Ambient temperature upon the 3rd fault	0°C to 999 °C	0°C	Read-only
FA-45	0xFA2D	Braking circuit current upon 3rd fault	0.00 to 655.35	0.00 A	Read-only
FA-46	0xFA2E	Grid voltage (Usr) upon the 3rd fault	0 V to 9999 V	0 V	Read-only
FA-47	0xFA2F	Grid voltage (Ust) upon the 3rd fault	0 V to 9999 V	0 V	Read-only
FA-48	0xFA30	Grid voltage (Utr) upon the 3rd fault	0 V to 9999 V	0 V	Read-only
FA-49	0xFA31	Three-phase unbalance factor upon the 3rd fault	0.00% to 655.35%	0.00%	Read-only
FA-50	0xFA32	DI status upon the 3rd fault	0 to 65535	0	Read-only
FA-51	0xFA33	RO state upon the 3rd fault	0 to 65535	0	Read-only
FA-52	0xFA34	Stop command sent by the rectifier upon the 3rd fault	• 1: Run • 2: Coast to stop • 3: Stop in the set mode	0	Read-only
FA-53	0xFA35	Total power-on time (in hours) upon the 3rd fault	0 to 65535	0 h	Read-only
FA-54	0xFA36	Total power-on time (minute) upon the 3rd fault	0 to 65535	0 min	Read-only
FA-55	0xFA37	Total power-on time (in seconds) upon the 3rd fault	0s to 65535s	0s	Read-only
FA-60	0xFA3C	Fault code of the 2nd fault (4th to last fault)	0 to 99	0	Read-only
FA-61	0xFA3D	Subcode of the 2nd fault	0 to 99	0	Read-only
FA-62	0xFA3E	Bus voltage upon the 2nd fault	0.0 to 6553.5	0.0	Read-only
FA-63	0xFA3F	Heatsink temperature upon the 2nd fault	0°C to 999 °C	0°C	Read-only
FA-64	0xFA40	Ambient temperature upon the 2nd fault	0°C to 999 °C	0°C	Read-only
FA-65	0xFA41	Braking circuit current upon the 2nd fault	0.00 to 655.35	0.00 A	Read-only
FA-66	0xFA42	Grid voltage Usr upon the 2nd fault	0 V to 9999 V	0 V	Read-only
FA-67	0xFA43	Grid voltage Ust upon the 2nd fault	0 V to 9999 V	0 V	Read-only
FA-68	0xFA44	Grid voltage Utr upon the 2nd fault	0 V to 9999 V	0 V	Read-only
FA-69	0xFA45	Three-phase unbalance factor upon the 2nd fault	0.00% to 655.35%	0.00%	Read-only
FA-70	0xFA46	DI state upon the 2nd fault	0 to 65535	0	Read-only
FA-71	0xFA47	RO state upon the 2nd fault	0 to 65535	0	Read-only
FA-72	0xFA48	Stop command sent by the rectifier upon the 2nd fault	• 1: Run • 2: Coast to stop • 3: Stop in the set mode	0	Read-only
FA-73	0xFA49	Total power-on time (in hours) upon the 2nd fault	0 to 65535	0 h	Read-only

Param.	Comm. address	Name	Setpoint	Default value	Change mode
FA-74	0xFA4A	Total power-on time (in minutes) upon the 2nd fault	0 to 65535	0 min	Read-only
FA-75	0xFA4B	Total power-on time (in seconds) upon the 2nd fault	0s to 65535s	0s	Read-only
FA-80	0xFA50	Fault code of the 1st fault (5th to last fault)	0 to 99	0	Read-only
FA-81	0xFA51	Subcode of the 1st fault	0 to 99	0	Read-only
FA-82	0xFA52	Bus voltage upon the 1st fault	0.0 to 6553.5	0.0	Read-only
FA-83	0xFA53	Heatsink temperature upon the 1st fault	0°C to 999 °C	0°C	Read-only
FA-84	0xFA54	Ambient temperature upon the 1st fault	0°C to 999 °C	0°C	Read-only
FA-85	0xFA55	Braking circuit current upon the 1st fault	0.00 to 655.35	0.00 A	Read-only
FA-86	0xFA56	Grid voltage Usr upon the 1st fault	0 V to 9999 V	0 V	Read-only
FA-87	0xFA57	Grid voltage Ust upon the 1st fault	0 V to 9999 V	0 V	Read-only
FA-88	0xFA58	Grid voltage Utr upon the 1st fault	0 V to 9999 V	0 V	Read-only
FA-89	0xFA59	Three-phase unbalance factor upon the 1st fault	0.00% to 655.35%	0.00%	Read-only
FA-90	0xFA5A	DI status upon the 1st fault	0 to 65535	0	Read-only
FA-91	0xFA5B	RO status upon the first fault	0 to 65535	0	Read-only
FA-92	0xFA5C	Stop command sent by the rectifier upon the 1st fault	• 1: Run • 2: Coast to stop • 3: Stop in the set mode	0	Read-only
FA-93	0xFA5D	Power-on duration (in hours) upon the 1st fault	0 to 65535	0 h	Read-only
FA-94	0xFA5E	Power-on duration (in minutes) upon the 1st fault	0 to 65535	0 min	Read-only
FA-95	0xFA5F	Total power-on time (s) upon the 1st fault	0s to 65535s	0s	Read-only

13.7 FD Communication Parameters

Param.	Comm. address	Name	Setpoint	Default value	Change mode
FD-00	0xFD00	Modbus baud rate	• 0: 300 bps • 1: 600 bps • 2: 1200 bps • 3: 2400 bps • 4: 4800 bps • 5: 9600 bps • 6: 19200 bps • 7: 38400 bps • 8: 57600 bps • 9: 115200 bps	5	Real time
FD-01	0xFD01	Modbus data format	• 0: No check (8-N-2) • 1: Even parity check (8-E-1) • 2: Odd parity check (8-O-1) • 3: 8-N-1	0	Real time
FD-02	0xFD02	Modbus local address	1–247 (0 is the broadcast address.)	1	Real time
FD-03	0xFD03	Modbus response delay	0 to 20	2 ms	Real time
FD-04	0xFD04	Modbus communication timeout period	0.0s to 60.0s	0.0s	Real time
Fd-10	0xFD0A	Communication protocol selection	• 1: CANopen • 2: CANlink • 3: PROFIBUS-DP-to-CANopen network bridge	1	Real time
FD-11	0xFD0B	CIA402 activation selection	• 0: Inactive • 1: Active	0	Real time
FD-12	0xFD0C	CAN baud rate	• 0: 20 kbps • 1: 50 kbps • 2: 100 kbps • 3: 125 Kbps • 4: 250 kbps • 5: 500 kbps • 6: 1 Mbps	5	Real time
Fd-13	0xFD0D	CAN station number	1 to 127	1	Real time
Fd-14	0xFD0E	Number of CAN frame received per unit time (in real time)	0 to 65535	0	Read-only
Fd-15	0xFD0F	Maximum value of node reception error counter (real time)	0 to 65535	0	Read-only
Fd-16	0xFD10	Maximum value of node transmission error counter (real time)	0 to 65535	0	Read-only
Fd-17	0xFD11	Bus-off count per unit time	0 to 65535	0	Read-only
Fd-18	0xFD12	Rectifier number	1 to 99	1	Real time
FD-20	0xFD14	PROFIBUS-DP communication address	0 to 125	0	Real time
FD-30	0xFD1E	Number of RPDO1 and RPDO2 mapped bytes	0 to 65535	0	Read-only

Param.	Comm. address	Name	Setpoint	Default value	Change mode
FD-31	0xFD1F	Number of TPDO1 and TPDO2 mapped bytes	0 to 65535	0	Read-only
FD-32	0xFD20	AF mapping mode switchover	• 0: Communication, not saved • 1: Communication, saved	1	Real time

13.8 FP User Password

Param.	Comm. address	Name	Setpoint	Default value	Change mode
FP-00	0x1F00	User password	0 to 65535	0	Real time
FP-01	0x1F01	Parameter initialization	• 0: Not applied • 1: Restore default parameters • 2: Clear log information • 4: Restore user backup parameters • 501: Back up current user parameters.	1	Real time
FP-02	0x1F02	Parameter modification property	• 0: Parameters can be modified. • 1: Parameters cannot be modified.	0	Real time
FP-03	0x1F03	Monitoring parameter display setting 1	0000 to FFFF • bit0: Bus voltage • bit1: Heatsink temperature • bit2: Ambient temperature • bit3: Braking circuit current • bit4: Usr line voltage • bit5: Ust line voltage • bit6: Utr line voltage • bit7: Three-phase unbalance factor • bit8: DI state • bit9: RO state • bit10: DI function state 1 • bit11: DI function state 2 • bit12: Active fault code • bit13: Active fault subcode • bit14: Reserved • bit15: Reserved	251	Real time
FP-04	0x1F04	Monitoring parameter display setting 2	• bit0: Any memory address value • bit1 to bit15: Reserved	0	Real time

13.9 AF Process Data Address Mapping

Param.	Comm. address	Name	Setpoint	Default value	Change mode
AF-00	0xAF00	RPDO1-SubIndex0-H	0 to 65535	0	Real time
AF-01	0xAF01	RPDO1-SubIndex0-L	0 to 65535	0	Real time
AF-02	0xAF02	RPDO1-SubIndex1-H	0 to 65535	0	Real time
AF-03	0xAF03	RPDO1-SubIndex1-L	0 to 65535	0	Real time
AF-04	0xAF04	RPDO1-SubIndex2-H	0 to 65535	0	Real time
AF-05	0xAF05	RPDO1-SubIndex2-L	0 to 65535	0	Real time
AF-06	0xAF06	RPDO1-SubIndex3-H	0 to 65535	0	Real time
AF-07	0xAF07	RPDO1-SubIndex3-L	0 to 65535	0	Real time
AF-08	0xAF08	RPDO2-SubIndex0-H	0 to 65535	0	Real time
AF-09	0xAF09	RPDO2-SubIndex0-L	0 to 65535	0	Real time
AF-10	0xAF0A	RPDO2-SubIndex1-H	0 to 65535	0	Real time
AF-11	0xAF0B	RPDO2-SubIndex1-L	0 to 65535	0	Real time
AF-12	0xAF0C	RPDO2-SubIndex2-H	0 to 65535	0	Real time
AF-13	0xAF0D	RPDO2-SubIndex2-L	0 to 65535	0	Real time
AF-14	0xAF0E	RPDO2-SubIndex3-H	0 to 65535	0	Real time
AF-15	0xAF0F	RPDO2-SubIndex3-L	0 to 65535	0	Real time
AF-16	0xAF10	RPDO3-SubIndex0-H	0 to 65535	0	Real time
AF-17	0xAF11	RPDO3-SubIndex0-L	0 to 65535	0	Real time
AF-18	0xAF12	RPDO3-SubIndex1-H	0 to 65535	0	Real time
AF-19	0xAF13	RPDO3-SubIndex1-L	0 to 65535	0	Real time
AF-20	0xAF14	RPDO3-SubIndex2-H	0 to 65535	0	Real time
AF-21	0xAF15	RPDO3-SubIndex2-L	0 to 65535	0	Real time
AF-22	0xAF16	RPDO3-SubIndex3-H	0 to 65535	0	Real time
AF-23	0xAF17	RPDO3-SubIndex3-L	0 to 65535	0	Real time
AF-24	0xAF18	RPDO4-SubIndex0-H	0 to 65535	0	Real time
AF-25	0xAF19	RPDO4-SubIndex0-L	0 to 65535	0	Real time
AF-26	0xAF1A	RPDO4-SubIndex1-H	0 to 65535	0	Real time
AF-27	0xAF1B	RPDO4-SubIndex1-L	0 to 65535	0	Real time
AF-28	0xAF1C	RPDO4-SubIndex2-H	0 to 65535	0	Real time
AF-29	0xAF1D	RPDO4-SubIndex2-L	0 to 65535	0	Real time
AF-30	0xAF1E	RPDO4-SubIndex3-H	0 to 65535	0	Real time
AF-31	0xAF1F	RPDO4-SubIndex3-L	0 to 65535	0	Real time
AF-32	0xAF20	TPDO1-SubIndexO-H	0 to 65535	0	Real time
AF-33	0xAF21	TPDO1-SubIndexO-L	0 to 65535	0	Real time
AF-34	0xAF22	TPDO1-SubIndex1-H	0 to 65535	0	Real time
AF-35	0xAF23	TPDO1-SubIndex1-L	0 to 65535	0	Real time
AF-36	0xAF24	TPDO1-SubIndex2-H	0 to 65535	0	Real time
AF-37	0xAF25	TPDO1-SubIndex2-L	0 to 65535	0	Real time
AF-38	0xAF26	TPDO1-SubIndex3-H	0 to 65535	0	Real time
AF-39	0xAF27	TPDO1-SubIndex3-L	0 to 65535	0	Real time
AF-40	0xAF28	TPDO2-SubIndex0-H	0 to 65535	0	Real time
AF-41	0xAF29	TPDO2-SubIndex0-L	0 to 65535	0	Real time
AF-42	0xAF2A	TPDO2-SubIndex1-H	0 to 65535	0	Real time
AF-43	0xAF2B	TPDO2-SubIndex1-L	0 to 65535	0	Real time
AF-44	0xAF2C	TPDO2-SubIndex2-H	0 to 65535	0	Real time
AF-45	0xAF2D	TPDO2-SubIndex2-L	0 to 65535	0	Real time
AF-46	0xAF2E	TPDO2-SubIndex3-H	0 to 65535	0	Real time
AF-47	0xAF2F	TPDO2-SubIndex3-L	0 to 65535	0	Real time
AF-48	0xAF30	TPDO3-SubIndex0-H	0 to 65535	0	Real time

Param.	Comm. address	Name	Setpoint	Default value	Change mode
AF-49	0xAF31	TPDO3-SubIndex0-L	0 to 65535	0	Real time
AF-50	0xAF32	TPDO3-SubIndex1-H	0 to 65535	0	Real time
AF-51	0xAF33	TPDO3-SubIndex1-L	0 to 65535	0	Real time
AF-52	0xAF34	TPDO3-SubIndex2-H	0 to 65535	0	Real time
AF-53	0xAF35	TPDO3-SubIndex2-L	0 to 65535	0	Real time
AF-54	0xAF36	TPDO3-SubIndex3-H	0 to 65535	0	Real time
AF-55	0xAF37	TPDO3-SubIndex3-L	0 to 65535	0	Real time
AF-56	0xAF38	TPDO4-SubIndex0-H	0 to 65535	0	Real time
AF-57	0xAF39	TPDO4-SubIndex0-L	0 to 65535	0	Real time
AF-58	0xAF3A	TPDO4-SubIndex1-H	0 to 65535	0	Real time
AF-59	0xAF3B	TPDO4-SubIndex1-L	0 to 65535	0	Real time
AF-60	0xAF3C	TPDO4-SubIndex2-H	0 to 65535	0	Real time
AF-61	0xAF3D	TPDO4-SubIndex2-L	0 to 65535	0	Real time
AF-62	0xAF3E	TPDO4-SubIndex3-H	0 to 65535	0	Real time
AF-63	0xAF3F	TPDO4-SubIndex3-L	0 to 65535	0	Real time
AF-66	0xAF42	Number of valid RPDOs	0 to 65535	0	Read-only
AF-67	0xAF43	Number of valid TPDOs	0 to 65535	0	Read-only

13.10 U0 Monitoring Parameters

Param.	Comm. address	Name	Setpoint	Default value	Change mode
U0-00	0x7000	Bus voltage (V)	0.0 to 6553.5	0.0	Read-only
U0-01	0x7001	Heatsink temperature (℃)	0℃ to 65535℃	0℃	Read-only
U0-02	0x7002	Braking transistor temperature (℃)	0℃ to 65535℃	0℃	Read-only
U0-03	0x7003	Braking circuit current (A)	0.00 to 655.35	0.00 A	Read-only
U0-04	0x7004	Input voltage Usr (V)	0 to 65535	0 V	Read-only
U0-05	0x7005	Input voltage Ust (V)	0 to 65535	0 V	Read-only
U0-06	0x7006	Input voltage Utr (V)	0 to 65535	0 V	Read-only
U0-07	0x7007	Three-phase unbalance factor (%)	0.00% to 655.35%	0.00%	Read-only
U0-08	0x7008	DI state	0 to 65535	0.00%	Read-only
U0-09	0x7009	RO state	0 to 65535	0	Read-only
U0-12	0x700C	Active fault code	0 to 65535	0	Read-only
U0-13	0x700D	Subcode of active fault	0 to 65535	0	Read-only
U0-14	0x700E	DI state after delay processing	0 to 65535	0	Read-only
U0-15	0x700F	DI state after polarity inversion	0 to 65535	0	Read-only
U0-17	0x7011	RO status after delay processing	0 to 65535	0	Read-only
U0-18	0x7012	RO status after polarity inversion	0 to 65535	0	Read-only
U0-19	0x7013	Reserved	0 to 65535	0	Read-only
U0-20	0x7014	Current power-on time: in hours	0 to 65535	0 h	Read-only

Param.	Comm. address	Name	Setpoint	Default value	Change mode
U0-21	0x7015	Current power-on time: in minutes	0 to 65535	0 min	Read-only
U0-22	0x7016	Current power-on time: in seconds	0s to 65535s	0s	Read-only
U0-23	0x7017	Current power-on time: in ms	0 to 65535	0 ms	Read-only
U0-24	0x7018	Fan control command word	• 0: OFF • 1: ON	0	Read-only
U0-25	0x7019	Braking unit control command word	0: OFF • 0: OFF • 1: ON	0	Read-only
U0-26	0x701A	Reserved	0 to 65535	0.00%	Read-only
U0-27	0x701B	Interaction command word of rectifier and inverter	• 1: Run • 2: Coast to stop • 3: Stop in the set mode	0	Read-only
U0-28	0x701C	Reserved	0 to 65535	0	Read-only
U0-29	0x701D	Reserved	0 to 65535	0	Read-only
U0-30	0x701E	Total power-on time: in hours	0 to 65535	0	Read-only
U0-31	0x701F	Total power-on time: in minutes	0 to 65535	0	Read-only
U0-32	0x7020	Total power-on time: in seconds	0 to 65535	0	Read-only
U0-33	0x7021	Total power-on time: in ms	0 to 65535	0	Read-only

14 Appendix C: Dual-Screw Synchronous Solution

14.1 Background of the Solution

The all-electric injection molding machine converts the rotary motion into the linear motion through the ball screw, and the screw drives the injection molding machine. To meet the requirements of large axial load of the equipment, multiple motors can be used to drive multiple screws to complete the process together.

14.2 Dual-Screw Synchronization Solution

The ES810 for the all-electric injection molding machine can be equipped with two motors to drive two screws. The synchronization solution is as follows:

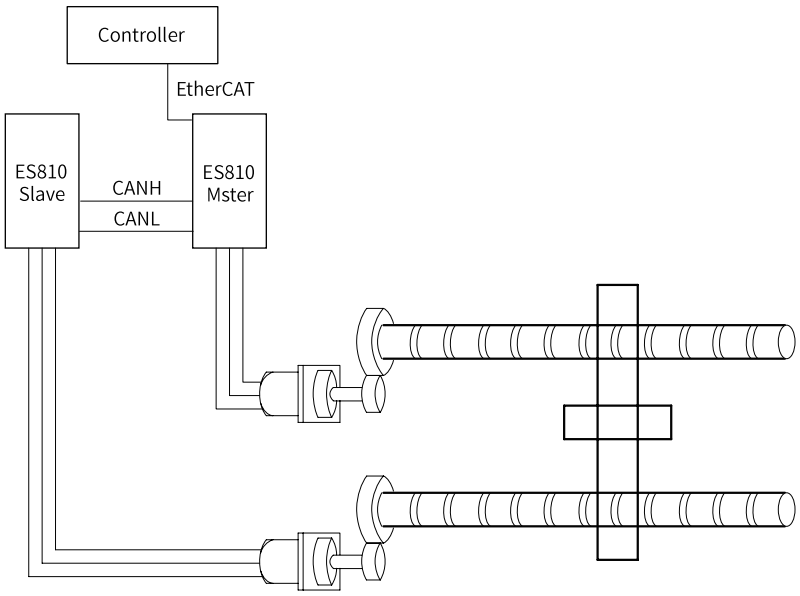

Solution details

- Use the ES810.
- Featuring the built-in process, the host controller sends the speed references to the master and slave simultaneously through the EtherCAT. Alternatively, the controller sends the control word to the master. During operation of the built-in process by the master, the master and slave exchange data internally to implement synchronization control.
- The host controller gets the information of the master and slave through EtherCAT.
- The master and slave exchange the motor speed and position information in real time through the CAN communication.

Data frame, communication cycle, and baud rate of the CAN communication

- The baud rate of the CAN communication is 1 Mbps.
- The data includes the position reference, position feedback, speed reference, speed feedback, and fault information.

Drive control policy

The host controller sends speed references to the drive and executes position loop. The master and slave drives receive speed references. Therefore, the master and slave drives adopt the speed closed-loop control.

The screw size and load inertia are the same.

The following figure shows the control diagram.

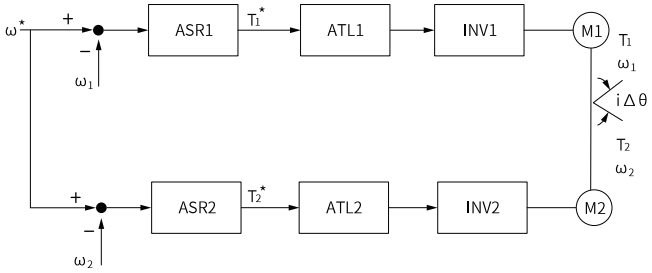

The control algorithm is described as follows.

- The ASR indicates the speed controller, ATL indicates the current controller, INV indicates the servo drive, and M indicates the motor.
- The master drive sends the speed reference from the host controller, gets the feedback of the master motor, and performs speed closed-loop control.
- The slave exchanges the speed and position information in real time through the CAN communication for position synchronization control.
- The drive features the built-in position synchronization algorithm.

14.3 Procedure

CAN communication wiring and setting

- Open the front covers of the master and slave, and turn on the termination resistor DIP switches 3 and 4, as shown in the following figure.

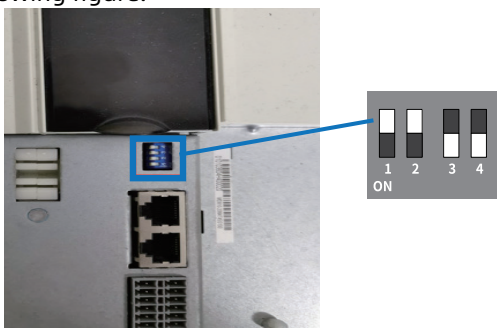

- Connect the RJ45A port of the master axis and the RJ45B port of the slave axis through the network cable, as shown in the following figure.

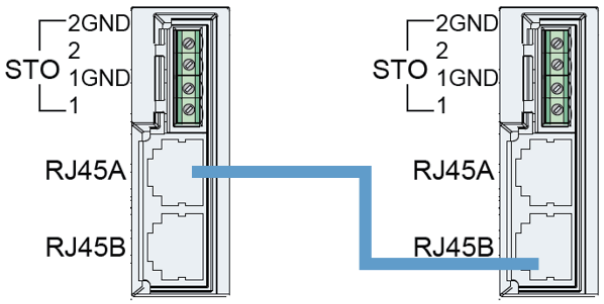

Master axis Slave axis

Parameter setting for screw synchronization

The slave is synchronized with the master. The address of the master axis is set to 1, and that of the slave axis is set to 2 (or another value different from the master axis address). The related parameter settings are shown below.

Master axis:

- H0C-00 = 1 (Axis address of the master drive)
- H0C-08 = 7 (Baud rate of the CAN communication data)
- H0C-20 = 1 (CAN communication mode between the master and slave)
- H05-67 = 1 (Slave follows master)
- H05-68 = 1 (Master axis)
- H05-72 = 2 (Receive CANID, H0C-00 value of the slave axis)
- H05-76 = 0 (Current position as the home)
- H05-86 = 1 (Speed reference source. 0 - Host controller; 1 - Built-in process)

Slave axis:

- H0C-00 = 2 (Axis address of the slave drive)
- H0C-08 = 7 (Baud rate of the CAN communication data)
- H0C-20 = 1 (CAN communication mode between the master and slave)
- H05-67 = 1 (Slave follows master)
- H05-68 = 0 (Slave axis)
- H05-72 = 1 (Receive CANID, H0C-00 value of the master axis)
- H05-76 = 0 (Current position as the home)
- H05-86 = 1 (Speed reference source. 0 - Host controller; 1 - Built-in process)

Other parameters:

- H05-69: PD filter time for master-slave synchronization
- H05-70: Regulator Kp for master-slave synchronization
- H05-71: Regulator Kd for master-slave synchronization

Note

After parameters of the master and slave axes are set, restart the drive.

Host controller configuration

The following table describes the 29 parameters related to dual-screw synchronization.

Table 14–1 Parameters related to dual-screw synchronization

No.	Param.	Name	Description	Default value	Value range	Master axis	Slave axis
1	H05-65	Data reception status bit in master-slave synchronization	Read-only	0	0 to 65535	-	-
2	H05-66	Data transmission status bit in master-slave synchronization	Read-only	0	0 to 65535	-	-
3	H05-67	Master-slave synchronization enable	• 0: Inactive • 1: Active Note: The setting of the master and slave axes must be consistent.	0	0 to 1	1	1
4	H05-68	Master-slave axis setting	• 0: Slave axis • 1: Master axis	0	0 to 1	1	0
5	H05-69	PD filter time for master-slave synchronization	Unit: 1 μs	0.00	0.00 to 64.00	0	0
6	H05-70	Regulator Kp in master-slave synchronization	Unit: 1 Hz	0.0	0.0 to 2000.0	0	0
7	H05-71	Regulator Kd in master-slave synchronization	Unit: 1%	0.0	0.0 to 2000.0	0	0
8	H05-72	Receive CANID of master-slave synchronous receiving axis	Axis address (H0C-00) of the remote axis	0	0 to 65535	Slave axis address	Slave axis ad-dress
9	H05-73	Position transmission delay	Unit: 1 μs	0	-30000 to +30000	-	-
10	H05-74	Local axis delay	Unit: 1 μs	0	-30000 to +30000	-	-
11	H05-75	Homing enable in master-slave synchronization	• 0: Inactive • 1: Active	0	0 to 1	0	0
12	H05-76	Homing mode in master-slave synchronization	• 0: Current position as the home • 3: Last position as the home	0	0 to 4	0	0
13	H05-80	Re-homing mode for master-slave synchronization	• bit0 to bit3: Homing mode upon re-homing at fault • bit5: Current loop parameter check enable upon power-on	0x23	0x00 to 0x23	0x23	0x23

No.	Param.	Name	Description	Default value	Value range	Master axis	Slave axis
14	H05-81	Re-homing enable in master-slave synchronization	• 0: Inactive • 1: Active • 2: Recalculate delay	0	0 to 2	0	0
15	H05-82	Excessive position deviation threshold in master-slave synchronization	Unit: 1°	10.0	1.0 to 360.0	10.0	10.0
16	H05-83	Torque deviation Ki in master-slave synchronization	-	5.0	0.0 to 6553.5	5.0	5.0
17	H05-84	Excessive torque deviation threshold in master-slave synchronization	Unit: 1%	50.0	5.0 to 100.0	50.0	50.0
18	H05-85	Torque deviation Kp in master-slave synchronization	-	1000	0 to 65535	1000	1000
19	H05-86	Speed reference source in master-slave synchronization	• 0: Host controller • 1: Built-in process of the drive	0	0 to 1	0	0
20	H05-87	Position deviation in the master-slave synchronization	-		-2147483648 to +2147483647	-	-
21	H06-12	Synchronization disable upon switching from S-OFF to S-ON	• 0: Synchronous • 1: Not synchronized	0	0 to 1	0	0
22	H06-33	Synchronization mode	• 0: Position synchronization • 1: Torque synchronization	0	0 to 1	0	0
23	H06-34	Step skipped during synchronization of parallel screws	-		0 to 65535	0	0
24	H06-37	Slave axis speed reference source	• 0: Master-slave axis speed deviation compensation • 1: Master axis host controller speed reference & master-slave axis speed deviation compensation	0	0 to 1	1	1

No.	Param.	Name	Description	Default value	Value range	Master axis	Slave axis
25	H06-39	Master-slave torque deviation limit	-	20	0 to 300	20	20
26	H06-45	Master and slave speed compensation limit	-	20	0 to 100	20	20
27	H0C-00	Drive axis address	-	1	1 to 247	-	-
28	H0C-08	Baud rate for CAN communication	• 0: 20 kpbs • 1: 50 kpbs • 2: 100 kpbs • 3: 125 kpbs • 4: 250 kpbs • 5: 500 kpbs • 6: 800 kbps • 7: 1 Mbps	5	0 to 7	7	7
29	H0C-20	CAN enable in master-slave synchronization	• 0: Standard program • 1: Synchronous CAN program	0	0 to 1	1	1

The monitoring and display function of the status bits for the master and slave axes is added for easy view of axis status. H05_65 is the receiving data status bit (screw parallel connection status bit of the peer axis) for master-slave synchronization. H05-66 is the transmission data status bit (screw parallel connection status bit of the local axis) for master-slave synchronization. The following table describes the specific meaning of each bit.

No.	bit	Meaning
1	bit0	Single-shot delay calculation completion flag bit
2	bit1	Delay calculation completion flag bit
3	bit2	Delay test (local axis ready) flag bit
4	bit3	Channel test completion flag bit
5	bit4	Homing function enable flag bit
6	bit5	Internal enable flag bit
7	bit6	Position deviation initial value calculation completion flag bit
8	bit7	Mechanical limit arrival flag bit
9	bit8	Homing completion flag bit
10	bit9	Delay test enable flag bit/re-homing flag bit
11	bit10	Servo-OFF enable flag bit
12	bit11	Status switchover flag bit
13	bit12 to bit14	Current step for parallel screws
14	bit15	Synchronization mode

Parallel screws are started in the following sequence:

- Channel test: Set bit12...bit14 of H05-66 to 1.
- Delay calculation: Set bit12...bit14 of H05-66 to 2.
- Homing: Set bit12..bit14 of H05-66 to 3.
- Synchronization control: Set bit12...bit14 of H05-66 to 4.

Adjustment of gain parameters

For dual-axis synchronous control, ensure that the current loop, speed loop, position loop, and related feedforward gain of both axes are consistent. For the parameter settings, see the user guide.

After the related parameters are set, perform inertia auto-tuning on the system through this product. The following conditions must be ensured for the inertia auto-tuning:

- The homing operations of the master and slave axes are done. bit12 to bit14 of H05_66 are set to 4, and the synchronous control mode applies.
- The master and slave axes are in the RDY state and the EtherCAT connection is normal.
- The moving part must be positioned at the middle of the travel range, with sufficient margin to avoid mechanical collision during the inertia auto-tuning process.

The inertia auto-tuning for synchronous control only needs to be performed on the master axis. The operation process is the same as that of the single axis. See the user guide for details. After inertia auto-tuning of the master axis is done, the value of H08-15 for the slave axis is consistent with that of the master axis.

14.4 Control Logic

Host controller startup logic

- Upon the initial power-on, if the value of H05-76 (homing mode) is 0 or 3, and bit12 to bit14 of H05-66 is 3 after channel test and delay calculation, the homing operation is required. After homing is done, bit12 to bit14 of H05-66 is 4.
- After the host controller detects that bit12 to bit14 of H05-66 for the master and slave is 4 (Synchronization control) and no fault occurred on the master and slave, it sends the speed reference or the control word (process parameter) in group H11.

Servo-OFF logic

- If the master or slave axis becomes faulty, the faulty axis is disabled.
- If the master or slave axis becomes faulty, the normal axis is disabled (motor switch) after the speed of the two axes is lower than the threshold (10 rpm) for 1s.

Parameters and process parameters

Both the master and slave drives send parameters such as process and torque reference limit through SDO. If some parameters are not written, the torque reference limit will be 0. This leads to a failure in synchronous control.

In normal operation, if the built-in process mode is used, process control words need to be sent only to the master axis.

Homing logic

If the host controller performs homing for the first time or detects an excessive deviation in the master and slave axis position, perform homing again.

Two homing modes are available, including the current position as the home and the previous position as the home.

- The homing process with the current position as the home is shown in the following figure, including the lead screw synchronization homing and built-in process homing. The host controller does not need to perform process built-in homing (H11-74 = 1).

Note

After homing is done, H05-76 is forcibly set to 3 (previous position as the home). In this case, the homing operation does not need to be performed on the drive at next power-on.

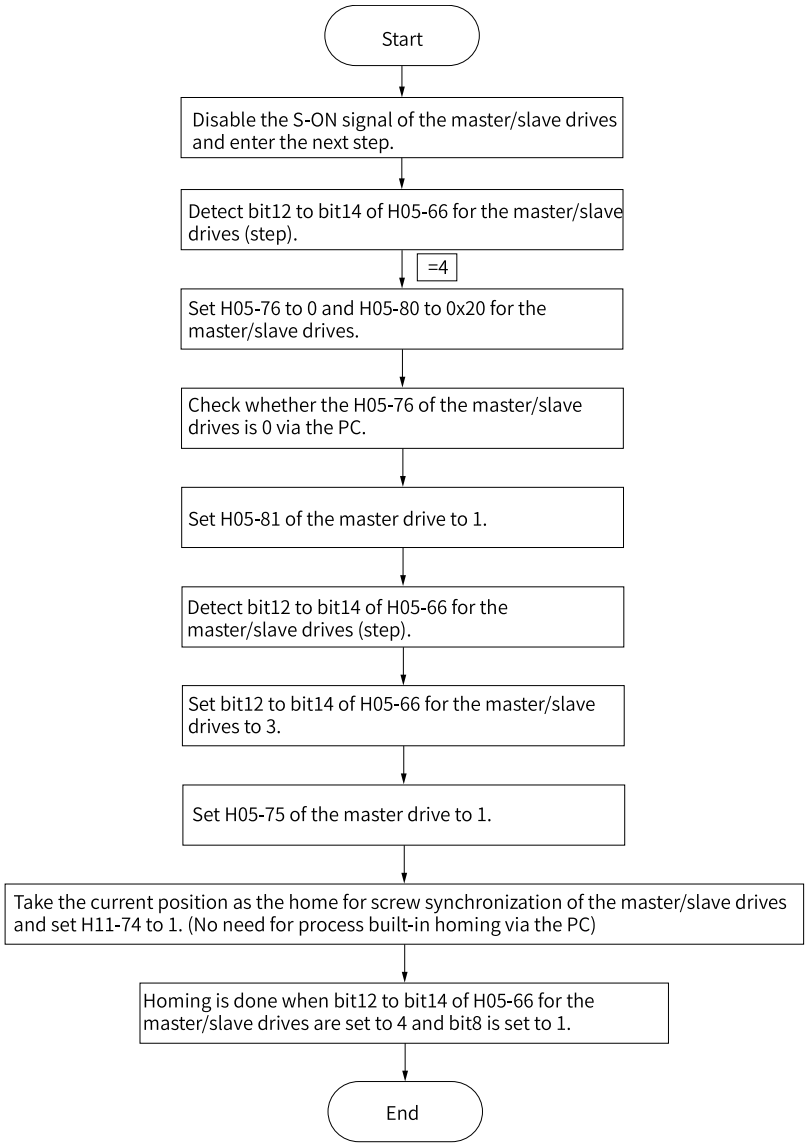

- The following figure shows the homing process where the previous position is used as the home.

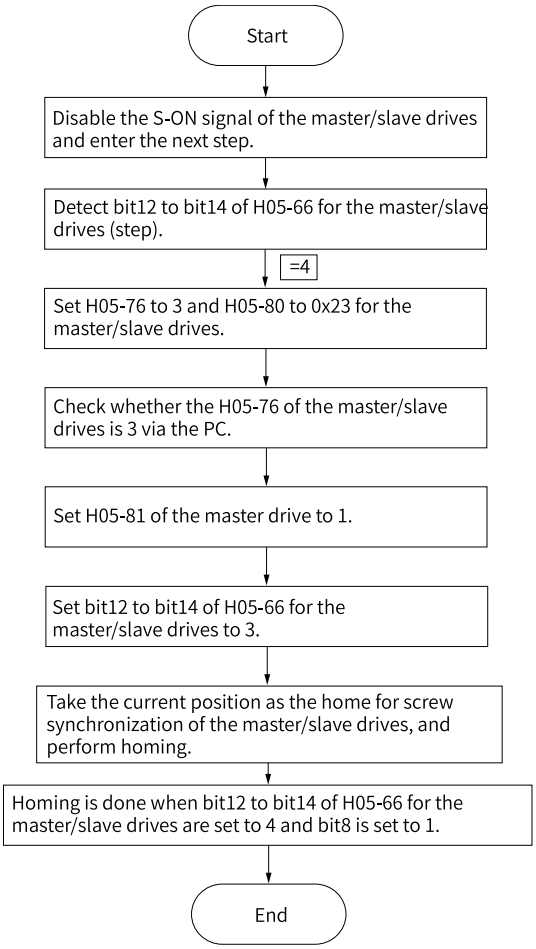

Stop logic

When the master or slave axis fails or both the master and slave axes fail, the drive will stop according to the current fault situation.

- If the master axis is faulty but the slave axis is normal, the master axis will stop according to the failure. The slave axis performs the same action as the master axis. When the speed of the slave axis is lower than the switchover speed, the slave axis is disabled.
- If the slave axis is faulty but the master axis is normal, the slave axis will stop according to the failure. The master axis performs the same action as the slave axis. When the speed of the master axis is lower than the switchover speed, the master axis is disabled.
- If both the master and slave axes are faulty, coast-to-stop is executed when the original stop mode upon fault is coast-to-stop (for MCU and FPGA faults). If the original stop mode is not coast-to-stop, dynamic braking stop will be executed by the master and slave axes.
- If data transmission or receiving fails for master and slave axes synchronization (CAN communication fault between the master and slave axes), the master and slave axes perform dynamic braking stop.

14.5 Parameters Related to Dual-Screw Synchronization

No.	Display	Meaning	Fault mechanism
1	E.E20.1	Master and slave synchronous reception failed	The CAN network cable is not connected, or the local axis cannot receive data from the peer axis due to CAN communication interference.
2	E.E20.2	Master and slave synchronous transmission failure	The CAN network cable is not connected, or the local axis cannot transmit data to the peer axis due to CAN communication interference.
3	E.E20.3	Excessive position transmission delay during master and slave synchronization	Excessive position transmission delay occurs during master and slave synchronization.
4	E.E20.4	Excessive position deviation during master-slave synchronization	The deviation between the master axis position and the slave axis position is larger than the value of H05-82.
5	E.E20.5	Excessive torque deviation during master-slave synchronization	The deviation between the master axis torque and the slave axis torque is larger than the value of H05-84.
6	A.E20.0	Current loop parameters of the master and slave axes different	The current loop parameters of the master and slave axes are different.
7	E.E25.0	Synchronous quick stop of master and slave	• The host controller sends quick stop signal (1 for H03-39). • The master and slave executes quick stop upon minor fault of the slave. • The speed changes from high speed (set by H0759) to 0 in one ECAT cycle.

15 Requirements for Certification and Standards Compliance

15.1 Certification and Standard Compliance

Standard

The following table lists the certifications, directives, and standards that the product complies with. For details about the certificates that the product has obtained, see the certification marks on the product nameplate.

Certification	Mark	Directive		Standard
CE certification	CE	EMC directive	2014/30/EU	EN IEC 61800-3
		LVD directive	2014/35/EU	EN 61800-5-1
UL certification	c UL us LISTED	-		UL 61800-5-1 CSA C22.2 NO.274
Safe Torque Off (STO) function	TÜV SÜD Safety tested Production monitored Functional Safety	Machinery Directive	2006/42/EC	EN 61800-5-2 EN 62061: 2021 EN ISO 13849-1 EN 61508: 2010

Note

- The above EMC directive is complied with only when the EMC electrical installation requirements described in this user guide are strictly observed.
- The integrator who integrates this drive into other products and attaches CE mark to the final assembly has the responsibility of ensuring compliance with CE standards and the European Norm.
- Not all the models have KC certification. Applicable certifications are listed on the product nameplate.
- For more information on product certifications, contact Inovance agent.
- The product meets the requirements of the latest instructions and standards of the CE/UL/cUL certification.

15.2 CE Certification

15.2.1 Precautions for Compliance with EU Standards

CE

Figure 15-1 CE mark

- The CE mark indicates compliance with the Low Voltage Directive (LVD), Electromagnetic Compatibility (EMC), and Restriction of Hazardous Substances (RoHS) directives for commercial trades (production, import, and sales) in EU.
- The CE mark is mandatory for engaging in commercial business (production, importation, and distribution) in EU.
- The drive complies with LVD, EMC, and RoHS directives and carries the CE mark.
- Machines and devices integrated with this drive must also comply with CE requirements for distribution in EU.
- The integrator who integrates this drive into other products and attaches CE mark to the final assembly has the responsibility of ensuring compliance with CE certification.

15.2.2 Requirements for Compliance with EMC Directive

Electromagnetic compatibility (EMC) describes the ability of electronic and electrical devices or systems to work properly in the electromagnetic environment and not to generate electromagnetic interference that influences other local devices or systems. In other words, EMC includes two aspects: 1. The electromagnetic interference generated by a device during normal operation cannot exceed a certain limit. 2. The device must have sufficient immunity to the electromagnetic interference in the environment.

- This drive, which is applicable to the First environment and Second environment, complies with EMC Directive 2014/30/EU and standard EN IEC 61800-3.



If the product is used in the first environment, it may generate radio interference. In addition to CE compliance requirements, measures should be taken to prevent interference when necessary.

- As required by EMC Directive and standard, install an EMC filter on the input side and use shielded cables on the output side. Ensure the filter is grounded properly and the shield of the output cable is grounded 360 degrees.



The manufacturer of the system with the product installed must ensure that the system meets the requirements of the European EMC Directive, and ensure that the system meets the requirements of the standard EN IEC 61800-3 according to the application environment of the system.

EMC specifications

The system manufacturer that integrates the drive is responsible for ensuring compliance with EMC directives and standards EN 61800-3 Category C2, C3 or C4 based on the application environment of the system.

Introduction to EMC standards

Electromagnetic compatibility (EMC) describes the ability of electrical and electronic devices or systems to work properly in the electromagnetic environment without introducing electromagnetic interferences that disturb the operation of other local devices or systems. Therefore, EMC includes the following requirements:

- The electromagnetic interference generated by the device or system during normal operation must be within a certain limit.
- The device or system must have sufficient immunity to the electromagnetic interference in the environment.

EN IEC 61800-3 defines the following two types of environments.

- First environment: Environment that includes domestic premises, and establishments directly connected without intermediate transformers to a low-voltage power supply network which supplies buildings used for domestic purposes
- Second environment: Environment that includes all establishments other than those directly connected to a low-voltage power supply network which supplies buildings used for domestic purposes

Devices are divided into the following four categories based on the intended environment.

- Category C1: Power drive systems with the rated voltage less than 1000 V, intended for use in the first environment.
- Category C2: Power drive systems with the rated voltage lower than 1000 V, which is neither a plug-in device nor a movable device and is intended to be installed and commissioned only by professionals when used in the first environment.
- Category C3: Power drive systems with the rated voltage lower than 1000 V, which is intended for use in the second environment and not intended for use in the first environment
- Category C4: Power drive systems with the rated voltage equal to or higher than 1000 V or rated current equal to or higher than 400 A, or intended for use in complex systems in the second environment

15.2.3 Requirements for Compliance with LVD

The product has been tested in accordance with EN61800-5-1 and complies with the Low Voltage Directive. Observe the following requirements to enable machines and devices integrated with this drive to comply with the LVD.

Installation location

Install the product in a place with overvoltage category III and pollution degree 1 or 2 as specified by IEC 60664-1.

Installation Environment

For requirements on installation environments, see *"3.2.2 Installation Environment Requirements" on page 33*.

Installation protection requirements

- The drive serves as a part of a final system. Install the drive as the system component in a fireproof cabinet that provides effective electrical and mechanical protection, and install it in accordance with local laws and regulations and relevant IEC standards.
- Drives (IP20) intended to be installed inside the cabinet must be installed in a structure that prevents intrusion of unwanted objects from the top and the front.

Wiring requirements for main circuit terminals

For details on main circuit terminal wiring, see *" Main Circuit Wiring" on page 72*.

Requirements for protective devices

To comply with EN 61800-5-1 standards, install a fuse/circuit breaker on the input side of the drive to prevent accidents caused by short circuit in the internal circuit. Use a fuse that matches the maximum input current of the AC drive. For selection of fuses, see *"11.8.1 Recommended AC Input Breakers and Contactors" on page 261*.

15.3 UL/cUL Certification



Figure 15-2 UL/cUL mark

- The UL/cUL mark commonly applies to products sold in the United States and Canada. Products with UL/cUL mark have been inspected and assessed by the UL organization. To pass UL/cUL certification, main built-in components of electrical products must also be UL certified.
- The drive has been tested in accordance with UL 61800-5-1 and CSA C22.2 No. 274 standard to determine compliance with UL/cUL standards. Observe the following requirements to enable machines and devices integrated with this drive to comply with UL/cUL standards.

Installation location

Install the drive in a place with overvoltage category III and pollution degree 1 or 2 as specified by UL61800-5-1.

Ambient temperature

According to the protection level, the ambient temperature must be maintained within the following range:

Ambient temperature range for T3-T8 models (open type): -10°C to +50°C

Installation requirements

As an open type product, the drive is installed in a cabinet. Its installation requirements are as follows:

The drive must be installed in a fireproof cabinet with doors that provide effective electrical and mechanical protection. The installation must conform to local and regional laws and regulations and relevant NEC standards.

Wiring requirements of main circuit



Field installation is not allowed for output terminals BR, (-), and (+).

- Terminals BR and (+) are used to connect options. Do not connect these terminals to an AC power supply.
- To protect the main circuit, separate and cover the surface that may come into contact with the main circuit.
- The control circuit is the internal safety extra-low voltage (SELV) circuit, which must be insulated and isolated from other circuits. Make sure that the control circuit is connected to the external SELV circuit.
- Prevent foreign matters from entering the wiring part of the terminal block.
- Do not solder twisted conductors (if used).
- The tightening torque may vary with terminals. Tighten terminal screws with the specified tightening torque. You can use the torque screwdriver, ratchet, or wrench.
- When using an electric screwdriver to tighten terminal screws, set a low speed to prevent damage to the terminal screws.
- Tighten the terminal screws with an angle not higher than 5°. Failure to comply may damage the terminal screws.

Wiring requirements for the control circuit

Observe the requirements in UL508 during wiring.

Main circuit cable selection requirement

For the selection of cable dimensions, follow the requirements of US National Electrical Code (NEC) and Part 1 of Canadian Electrical Code (CEC) and relevant local regulations.

- Use cables with copper conductors.
- The recommended cables for the main circuit are 600 V Class 2 heat-resistant indoor PVC cables that can work under temperature of 75°C (167°F) continuously. The following conditions are used as premises:

  1. Ambient temperature: Below 40°C (104°F)
  2. Normal operating ratings

If the recommended cables for peripheral equipment or options are not suitable for the product, contact Inovance.

Main circuit cable selection

For details about main circuit cable selection requirements, see *"5.6.1.1 Main Circuit Cables of the Rectifier Unit" on page 72*.

Requirements for protective devices

- To meet the requirements of UL standards, a fuse/circuit breaker must be connected on the input side to prevent accidents caused by internal short circuits.
- Install sufficient protective devices against short circuit in branch circuits according to applicable regulations and this guide. The drive is applicable to circuits with the rated breaking capacity lower than 100000 A and the maximum voltage of 480 VAC (class 400 V). For details about the selection of the fuse/circuit breaker, see *"11.8.1 Recommended AC Input Breakers and Contactors" on page 261* .

15.4 STO Functional Safety Certification

Figure 15-3 STO functional safety certification mark

EU directives and standards

Machinery Directive 2006/42/EC (functional safety) and standards IEC 61800-5-2, EN 62061:2021, EN ISO 13849-1, and EN 61508:2010.

15.5 KC Certification

Figure 15-4 KC mark

Drives with the KC mark on the nameplate comply with electromagnetic compatibility standards of South Korea.

이 기기는 업무용(A 급) 전자파적합기기로서 판매자 또는사용자는 이 점을 주의하시기 바라며, 가정외의 지역에서 사용하는 것을 목적으로 합니다.

For sellers or other users, please bear in mind that this device is an A-grade electromagnetic wave device.
This device is intended to be used in areas other than at home.

16 Service and Support

Should you encounter a safety accident during the use or operation of the product, or face challenges in operating and maintaining the equipment, which remain unresolved after the relevant documentation is consulted, we provide multiple channels to ensure prompt resolution:

- Channel #1: Contact service@inovance.com.
- Channel #2: Visit https://www.inovance.com/global to access document downloads, after-sales support, spare parts ordering, repair applications, and authenticity verification services.
- Channel #3: Download My Inovance app (https://zshc-eu.inovance.com/download-pc/) where you can access products info and documentation, and query product parameters.

We are committed to providing you with quick and professional technical support, and we look forward to your satisfaction and trust.

Copyright © Shenzhen Inovance Technology Co., Ltd.

PS00017743A02

Shenzhen Inovance Technology Co., Ltd.

www.inovance.com

Add.: Inovance Headquarters Tower, High-tech Industrial Park,
Guanlan Street, Longhua New District,
Shenzhen 518000, P.R. China

Tel: (0755) 2979 9595 Fax: (0755) 2961 9897

Suzhou Inovance Technology Co., Ltd.

www.inovance.com

Add.: No. 52, Tian E Dang Road, Wuzhong District, 215104,
Suzhou City, Jiangsu Province, P.R. China

Tel: (0512) 6637 6666 Fax: (0512) 6285 6720