INOVANCE

FORWARD, ALWAYS PROGRESSING

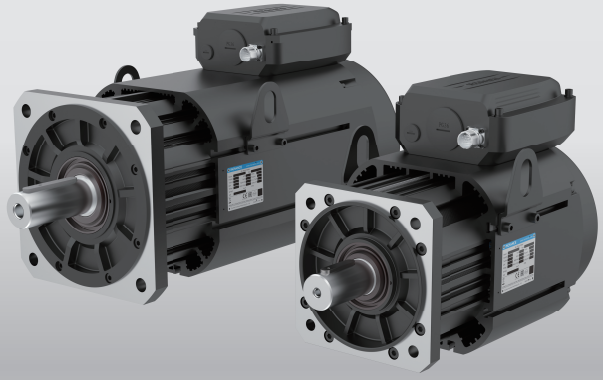

MEG Series
Air-Cooled Servo Motor

User Guide

Industrial Automation | Intelligent Elevator | New Energy Vehicle | Industrial Robot | Rail Transit

Data code 19012511A06

Preface

Introduction

Thank you for purchasing MEG20/MEG23 air-cooled series permanent magnet synchronous motors.

The MEG20/MEG23 series air-cooled motor is a new generation of three-phase permanent magnet synchronous motors for hydraulic servo platforms. It is mainly used in injection molding machines, hydraulic presses, and profile extruders.

The motor can be selected in three speed categories: 1700 rpm/2000 rpm/2200 rpm, with power ranging from 8.2 kW to 78.6 kW and torque ranging from 43 N·m to 357 N·m. To meet the need for foot mounting, the motor includes the "-K" and "-W" models configured with the foot mounting plate.

The motor adopts an independent fan for air cooling. The stator winding is built-in with PTC1000 for temperature protection. The rotor adopts the built-in structure to greatly improve the demagnetization capacity of the motor. It is recommended to use this motor together with ES680 series drives to form an efficient drive system that features high-performance and low noise.

This user guide presents information including product information, motor selection, and motor wiring. Read through this user guide before initial use. If you have any question concerning the product function or performance, contact Inovance for technical support.

Documents provided by Inovance are subject to change without notice due to continuous product improvement.

Note

- The drawings in the user guide are sometimes shown without covers or protective guards. Remember to install the covers or protective guards as specified first, and then perform operations in accordance with the instructions.
- The drawings in the user guide are shown for descriptions only and may not match the product you purchased.
- The user guide is subject to change without notice due to product upgrade, specification modifications as well as efforts to improve the accuracy and convenience of the user guide.

Revision History

Date	Version	Description
August 2024	A06	• Updated *"2.4 Product Dimensions" on page 17*. • Updated *"3.2 Electrical Specifications" on page 27*. • Updated *"3.3 Torque-Speed Characteristics" on page 34*. • Updated *"3.4 Radial Force and Axial Force" on page 40*.
April 2024	A05	• Updated *"2.4 Product Dimensions" on page 17*. • Updated *"3.1 Mechanical Characteristics" on page 26*.
December 2023	A04	Updated the component diagram in section 2.1. Updated component diagram in section 2.2. Updated motor dimensions in section 2.4. Updated section 7.1.
October 2023	A03	Updated the selection list. Updated section 2.3. Updated general specifications. Updated hub ring descriptions.
June 2023	A02	Modified the model and nameplate in section 2.1. Updated product dimensions in section 2.4. Modified electrical specifications in section 3.2. Updated the "Torque-speed characteristics" figures in Chapter 3.3. Updated section 6.1. Updated hub ring descriptions.
October 2022	A01	Updated the "Torque-speed characteristics" figures in Chapter 3.3.
July 2022	A00	First release.

Access to the Guide

This guide is not delivered with the product. You can obtain the PDF version by the following methods:

- Do keyword search under Service and Support at *http://www.inovance.com*.
- Scan the QR code on the product with your smart phone.
- Scan the QR code below to install My Inovance app, where you can search for and download user guides.



Warranty Disclaimer

Inovance provides warranty service within the warranty period (as specified in your order) for faults or damage that occur during normal operation. Maintenance will be charged after the warranty expires.

Within the warranty period, maintenance will be charged for the following damage:

- Damage caused by operations not following the instructions in the user guide
- Damage caused by fire, flood, or unusual voltage
- Damage caused by unintended use of the product
- Damage caused by use beyond the specified scope of application of the product
- Damage or secondary damage caused by force majeure (natural disaster, earthquake, and lightning strike)

The maintenance is charged according to the latest Price List of Inovance. If otherwise agreed upon, the terms and conditions in the agreement shall prevail.

For details, see Product Warranty Card.

Table of Contents

Preface 1
Fundamental Safety Instructions 5
1 Model Selection 13
2 Product Information 15
2.1 Model and Nameplate 15
2.2 Motor Components 16
2.3 Components of the Motor Junction Box 16
2.4 Product Dimensions 17
3 General Specifications 26
3.1 Mechanical Characteristics 26
3.2 Electrical Specifications 27
3.3 Torque-Speed Characteristics 34
3.4 Radial Force and Axial Force 40
3.5 PT1000 Resistor Temperature Characteristic Curve 41
4 Wiring 42
4.1 System Wiring Diagram 42
4.2 Connecting Power Cables 44
4.3 Encoder Terminal 45
4.4 Routing in the Junction Box 46
5 Maintenance Cycle 48
6 Maintenance 49
6.1 Routine Maintenance 49
6.1.1 Daily Checklist 49
6.1.2 Routine Cleaning List 49
6.2 Regular Checklist 50
7 Parts Replacement 51
7.1 Replacing the Cooling Fan 51
7.2 Replacing the Flat Key 54
7.3 Replacing the Motor Oil Seal 55
8 Hub Ring 56
9 Standards Compliance 57

Fundamental Safety Instructions

Safety disclaimer

- This chapter provides essential safety instructions for proper use of the equipment. Before operating the equipment, read through the guide and comprehend all the safety instructions. Failure to observe the safety precautions may result in serious injuries or death of personnel or device damage.
- "DANGER", "WARNING", and "CAUTION" items in this guide do not indicate all safety precautions that need to be followed; instead, they just supplement the safety precautions.
- Use this product according to the designated environment requirements. Damage caused by improper use is not covered by warranty.
- Inovance shall take no responsibility for any personal injuries or property damage caused by improper usage.

Safety Levels and Definitions



Indicates that failure to comply with the notice can result in death or severe personal injuries.



Indicates that failure to comply with the notice may result in death or severe personal injury.



Indicates that failure to comply with the notice may result in minor or moderate personal injury or equipment damage.

General Safety Instructions

- Drawings in the guide are sometimes shown without covers or protective guards. Remember to install the covers or protective guards as specified first, and then perform operations in accordance with the instructions.
- The drawings in the guide are shown for illustration only and may be different from the product you purchased.
- Operators must take mechanical precautions to protect personal safety and wear protective equipment, such as anti-smashing shoes, safety clothing, safety glasses, protective gloves, and protective sleeves.

Unpacking
 • Do not install the equipment if you find damage, rust, or signs of use on the equipment or accessories upon unpacking. • Do not install the equipment if you find water seepage or missing or damaged components upon unpacking. • Do not install the equipment if you find the packing list does not conform to the equipment you received.
 • Check whether the packing is intact and whether there is damage, water seepage, dampness, and deformation before unpacking. • Unpack the package by following the unpacking sequence. Do not strike the package violently. • Check whether there is damage, rust, or signs of bumping on the surface of the equipment and equipment accessories before unpacking. • Check whether the package contents are consistent with the packing list before unpacking.

Storage and Transportation



- Large-scale or heavy equipment must be transported by qualified professionals using specialized hoisting equipment. Failure to comply may result in personal injuries or equipment damage.
- Before hoisting the equipment, ensure the components such as the front cover and terminal blocks are secured firmly with screws. Loosely-connected components may fall off and result in personal injury or equipment damage.
- Never stand or stay below the equipment when the equipment is being hoisted by the hoisting equipment.
- When hoisting the equipment with a steel rope, ensure the equipment is hoisted at a constant speed without suffering from vibration or shock. Do not turn the equipment over or let the equipment stay hanging in the air. Failure to comply may result in personal injuries or equipment damage.



- Handle the equipment with care during transportation and mind your steps to prevent personal injuries or equipment damage.
- When carrying the equipment with bare hands, hold the equipment casing firmly with care to prevent parts from falling. Failure to comply may result in personal injuries.
- Store and transport the equipment based on the storage and transportation requirements. Failure to comply will result in equipment damage.
- Avoid storing or transporting the equipment in environments with water splash, rain, direct sunlight, strong electric field, strong magnetic field, and strong vibration.
- Avoid storing the product for more than 3 months. When the product needs to be stored for an extended period, take more strict protection and necessary inspection.
- Pack the equipment strictly before transportation. Use a sealed box for long-distance transportation.
- Never transport the equipment with other equipment or materials that may harm or have negative impacts on this equipment.

Installation



- The equipment can only be operated by professionals with electrical knowledge. Non-professionals are not allowed to operate on the equipment.



- Read through the guide and safety instructions before installation.
- Do not install this equipment in places with strong electric or magnetic fields.
- Before installation, check that the mechanical strength of the installation site can bear the weight of the equipment. Failure to comply will result in mechanical hazards.
- Do not wear loose clothes or accessories during installation. Failure to comply may result in an electric shock.
- When installing the equipment in a closed environment (such as a cabinet or casing), use a cooling device (such as a fan or air conditioner) to cool the environment down to the required temperature. Failure to comply may result in equipment over-temperature or a fire.
- Do not retrofit the equipment.
- Do not fiddle with the bolts used to fix equipment components or the bolts marked in red.
- When the equipment is installed in a cabinet or final assembly, a fireproof enclosure providing both electrical and mechanical protections must be provided. The IP rating must meet IEC standards and local laws and regulations.
- Before installing devices with strong electromagnetic interference, such as a transformer, install a shielding device for the equipment to prevent malfunction.
- Install the product on an incombustible object such as metal and do not touch or attach the product to combustibles. Failure to comply can result in fire accident.



- Cover the top of the equipment with a piece of cloth or paper during installation. This is to prevent unwanted objects such as metal chippings, oil, and water from falling into the equipment and causing faults. After installation, remove the cloth or paper on top of the equipment to prevent over-temperature caused by poor ventilation due to blocked ventilation holes.
- Resonance may occur when the equipment operating at a constant speed executes variable speed operations. In this case, install the vibration-proof rubber under the motor frame or use the vibration suppression function to reduce resonance.

Wiring



- Equipment installation, wiring, maintenance, inspection, or parts replacement must be performed only by professionals.
- Before wiring, disconnect all the power supplies of the equipment, and wait for at least the time designated on the equipment warning label before further operations because residual voltage still exists after power-off. Measure the DC voltage of the main circuit and ensure that the voltage is within the safety range. Failure to comply can result in an electric shock.
- Do not perform wiring, remove the equipment cover, or touch the circuit board with power ON. Failure to comply will result in an electric shock.
- Check that the equipment is grounded properly. Failure to comply can result in an electric shock.



- Do not connect the input power supply to the output end of the equipment. Failure to comply can result in equipment damage or even a fire.
- When connecting a drive to the motor, check that the phase sequences of the drive and motor terminals are consistent to prevent reverse motor rotation.
- Cables used for wiring must meet cross sectional area and shielding requirements. The shield of the cable must be reliably grounded at one end.
- Fix the terminal screws with the tightening torque specified in the user guide. Improper tightening torque may overheat or damage the connecting part, resulting in a fire.
- After wiring is done, check that all cables are connected properly and no screws, washers or exposed cables are left inside the equipment. Failure to comply may result in electric shock or equipment damage.



- Follow the proper electrostatic discharge (ESD) procedure and wear an anti-static wrist strap to perform wiring. Failure to comply may result in damage to the equipment or to the internal circuit of the product.
- Use shielded twisted pairs for the control circuit. Connect the shield to the grounding terminal of the equipment for grounding purpose. Failure to comply can result in equipment malfunction.

Power-on



- Before power-on, check that the equipment is installed properly with reliable wiring and the motor can be restarted.
- Check that the power supply meets equipment requirements before power-on to prevent equipment damage or fire accident.
- Do not open the cabinet door or protective cover of the product, touch any wiring terminal of the product, or remove any part of the product with power on. Failure to comply can result in an electric shock.



- Perform a trial run after wiring and parameter setting to ensure the equipment operates safely. Failure to comply may result in personal injuries or equipment damage.
- Before power-on, check that the rated voltage of the equipment is consistent with that of the power supply. Failure to comply may result in a fire.
- Before power-on, check that no one is near the equipment, motor, or machine. Failure to comply may result in death or personal injury.

Operation



- The equipment must be operated only by professionals. Failure to comply can result in death or personal injury.
- Do not touch any connecting terminals or disassemble any unit or component of the equipment during operation. Failure to comply can result in an electric shock.



- Do not touch the equipment casing, fan, or resistor with bare hands to feel the temperature. Failure to comply may result in personal injuries.
- Prevent metal or other objects from falling into the equipment during operation. Failure to comply may result in a fire or equipment damage.

Maintenance



- Equipment installation, wiring, maintenance, inspection, or parts replacement must be performed only by professionals.
- Do not maintain the equipment with power ON. Failure to comply will result in an electric shock.
- Before maintenance, disconnect all the power supplies of the equipment and wait for at least the time designated on the equipment warning label.
- When a permanent magnet motor is used, do not touch the motor terminals immediately after power-off because the motor terminals can generate induced voltage during rotation even after the equipment power supply is off. Failure to comply will result in an electric shock.



- Perform routine and periodic inspection and maintenance on the equipment according to maintenance requirements and keep a maintenance record.

Repair



- Equipment installation, wiring, maintenance, inspection, or parts replacement must be performed only by professionals.
- Do not repair the equipment with power ON. Failure to comply can result in an electric shock.
- Before inspection and repair, cut off all the power supplies of the equipment and wait for at least the time designated on the equipment warning label.



- Submit the repair request according to the warranty agreement.
- When the fuse is blown or the circuit breaker or earth leakage current breaker (ELCB) trips, wait for at least the time designated on the equipment warning label before power-on or further operations. Failure to comply may result in death, personal injury or equipment damage.
- When the equipment is faulty or damaged, the troubleshooting and repair work must be performed by professionals that follow the repair instructions, with repair records kept properly.
- Replace quick-wear parts of the equipment according to the replacement instructions.
- Do not operate on damaged equipment. Failure to comply may result in death, personal injury, or severe equipment damage.
- After the equipment is replaced, check the wiring and set parameters again.

Disposal
WARNING • Dispose of retired equipment in accordance with local regulations and standards. Failure to comply may result in property damage, personal injuries, or even death. • Recycle retired equipment by observing industry waste disposal standards to avoid environmental pollution.

Safety Labels

For safe operation and maintenance, comply with the safety labels on the equipment. Do not damage or remove the safety labels. See the following table for descriptions of the safety labels.

Safety Label	Description
	Indicates that the user guide must be read through before you install or operate on the equipment.
	Indicates that the the system and product must be grounded properly.
	Indicates danger may exist.
	Indicates high voltage may exist.
	Indicates personal injury may occur.
	Indicates high temperature may exist.
	Indicates that the motor cannot be subject to violent strike.

1 Model Selection

Flange size	Motor model	Recommended servo drive model
200 x 200	MEG20-71C17CD	ES680-4T025-C1 ES680-4T032-C1
	MEG20-80C20CD	
	MEG20-85C22CD	
	MEG20-11D17CD	ES680-4T025-C1 ES680-4T032-C1
	MEG20-13D20CD	
	MEG20-13D22CD	
	MEG20-17D17CD	ES680-4T032-C1 ES680-4T037-C1
	MEG20-18D20CD	
	MEG20-20D22CD	
	MEG20-19D17CD	ES680-4T037-C1 ES680-4T044-C1
	MEG20-22D20CD	
	MEG20-23D22CD	
	MEG20-23D17CD	ES680-4T044-C1 ES680-4T060-C1
	MEG20-25D20CD	
	MEG20-27D22CD	
	MEG20-27D17CD	ES680-4T044-C1 ES680-4T060-C1
	MEG20-30D20CD	
	MEG20-31D22CD	
	MEG20-29D17CD	ES680-4T060-C1 ES680-4T075-C1
	MEG20-32D20CD	
	MEG20-33D22CD	
	MEG20-32D17CD	ES680-4T075-C1 ES680-4T091-C1
	MEG20-35D20CD	
	MEG20-39D22CD	
	MEG20-35D17CD	ES680-4T075-C1
	MEG20-38D20CD	
	MEG20-42D22CD	
230 x 230	MEG23-41D17CD	ES680-4T075-C1 ES680-4T091-C1
	MEG23-48D20CD	
	MEG23-51D22CD	
	MEG23-48D17CD	ES680-4T091-C1 ES680-4T112-C1
	MEG23-52D20CD	
	MEG23-55D22CD	
	MEG23-55D17CD	ES680-4T112-C1 ES680-4T150-C1
	MEG23-59D20CD	
	MEG23-63D22CD	
	MEG23-59D17CD	ES680-4T112-C1 ES680-4T150-C1
	MEG23-67D20CD	
	MEG23-75D22CD	
	MEG23-63D17CD	ES680-4T150-C1
	MEG23-72D20CD	ES680N-4T150-C1
	MEG23-79D22CD	

Servo drive model	Encoder cable model
ES680-4T025-C1	ES680-P10-3.0 ES680-P10-6.0 ES680-P10-8.0 ES680-P10-12.0 ES680-P10-15.0 ES680-P10-25.0 ES680-P10-30.0
ES680-4T032-C1	
ES680-4T037-C1	
ES680-4T044-C1	
ES680-4T060-C1	
ES680-4T075-C1	
ES680-4T091-C1	
ES680-4T112-C1	
ES680-4T150-C1	

2 Product Information

2.1 Model and Nameplate

Model

MEG ① 20 ② - 13D ③ 22C ④ D ⑤ - ** ⑥ * ⑦ * ⑧ * ⑨ _ * ⑩

① **Product series** MEG: Servo motor for hydraulic servo drives	④ **Rated speed** (comprised of two digits and a letter) A: x 1 B: x 10 C: x 100 D: x 1000 E: x 10000 Example: 22C: 2200 rpm	⑦ **Shaft connection mode** 1: Plain shaft 2: Hollow cone shaft 3: Solid, with key and tapped hole A: Solid, with key and threaded hole, built-in rotor
② **Flange size** 20: 200 x 200 23: 230 x 230		
③ **Rated power** (comprised of two digits and a letter) A: x 1 B: x 10 C: x 100 D: x 1000 E: x 10000 Example: 13D: 13000 W	⑤ **Voltage class** D: 380 V	⑧ **Brake, reducer and oil seal** 0: None 1: Oil seal
	⑥ **Encoder type** (comprised of a letter and a digit) A3: 23-bit high performance encoder	⑨ **Cooling mode** F: Forced air cooling
		⑩ **Customized** _: Standard K: Narrow foot W: Wide foot

Nameplate description

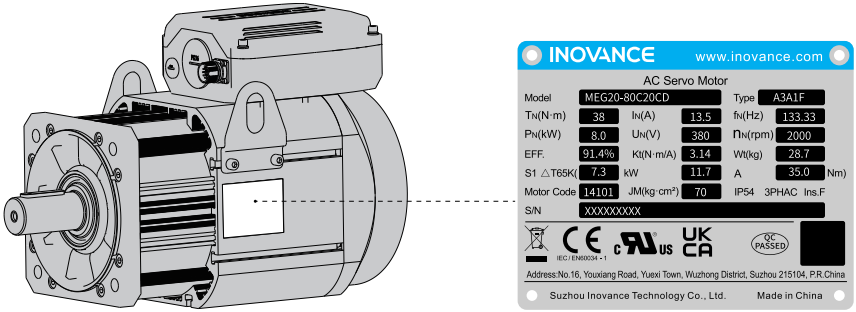

Note

- The preceding nameplate is used as an example. The actual nameplate is subject to the product.

2.2 Motor Components

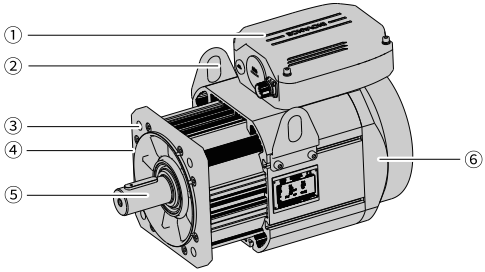

Figure 2-1 Components of the motor

No.	Part name
①	Junction box
②	Eyebolt
③	Mounting screw on the user side
④	Mounting flange on the user side
⑤	Shaft extension (keyed)
⑥	Fan rear cover

2.3 Components of the Motor Junction Box

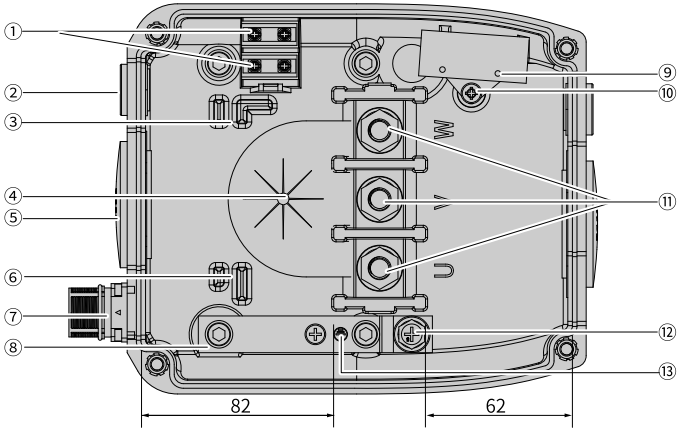

Figure 2-2 Internal structure of the motor junction box

No.	Part name	No.	Part name	No.	Part name
①	220 V fan; 2-M4 screw	⑤	2 x PG36 sealing plug	⑩	M4 screw
②	2 x PG11 sealing plug	⑦	M23 aviation connector	⑪	M10 bolt for U, V, and W power cables, which is applicable to standard M10 nuts
③/⑥	Routing duct	⑧	4-M6 spring/flat washer screw that connected to the junction box and enclosure	⑫	M8 grounding screw
④	Motor cable outlet (Take measures to prevent falling of small components.)	⑨	Fan capacitor	13	Grounding mark

2.4 Product Dimensions

Dimensions of MEG20-*******-A3A1F servo motors

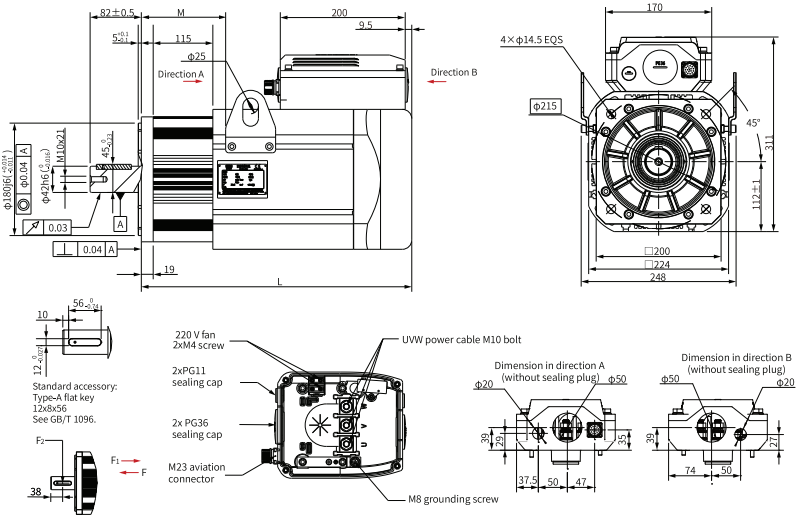

Figure 2-3 Dimensions of MEG20-*******-A3A1F servo motors (unit: mm)

Note

- Technical requirements: Dimensional tolerance not specified in the drawing shall follow the requirements of class C in GB/T 1804-2000.
- Foot mounting is available. For details, contact Inovance.

Table 2–1 Dimensions and weight of MEG20-*******-A3A1F servo motors

Model MEG20-*******-A3A1F	M (mm)	L (mm)	Net weight (kg)	Gross weight (kg)
71C17CD 80C20CD 85C22CD	134	320	30	35
11D17CD 13D20CD 13D22CD	134	351	35	40
17D17CD 18D20CD 20D22CD	134	377	40	50
19D17CD 22D20CD 23D22CD	134	405	45	50
23D17CD 25D20CD 27D22CD	135	434	50	55
27D17CD 30D20CD 31D22CD	148	462	55	60
29D17CD 32D20CD 33D22CD	162	491	60	70
32D17CD 35D20CD 39D22CD	180	519	70	75
35D17CD 38D20CD 42D22CD	200	549	75	80

MEG20-*****-A3A1F-K**

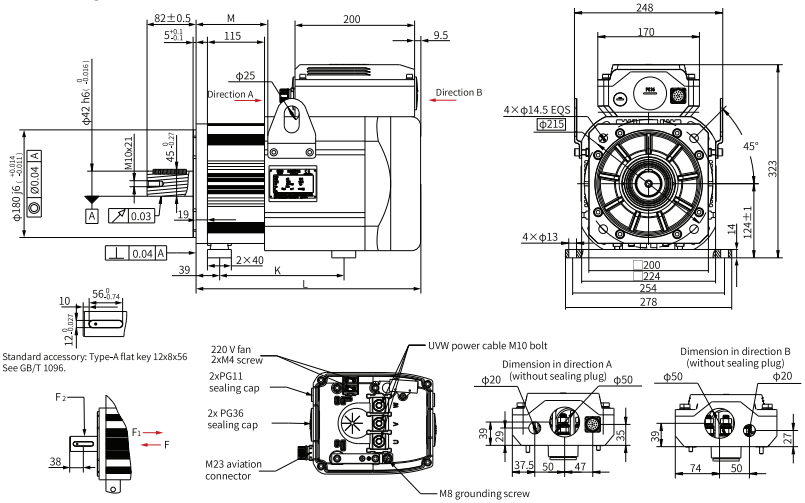

Figure 2-4 Dimensions of MEG20-*******-A3A1F-K servo motors (unit: mm)

Note

- Technical requirements: Dimensional tolerance not specified in the drawing shall follow the requirements of class c in GB/T 1804–2000.
- Foot mounting is available. Contact Inovance for details.

Table 2–2 Dimensions and weight of MEG20-*******-A3A1F-K servo motors

Model MEG20-*******-A3A1F	M (mm)	L (mm)	K (mm)	Net weight (kg)	Gross weight (kg)
71C17CD 80C20CD 85C22CD	134	320	151	35	40
11D17CD 13D20CD 13D22CD	134	351	180	40	45
17D17CD 18D20CD 20D22CD	134	377	208	45	50
19D17CD 22D20CD 23D22CD	134	405	237	50	55

Model MEG20-*******-A3A1F	M (mm)	L (mm)	K (mm)	Net weight (kg)	Gross weight (kg)
23D17CD 25D20CD 27D22CD	135	434	265	55	60
27D17CD 30D20CD 31D22CD	148	462	294	60	70
29D17CD 32D20CD 33D22CD	162	491	322	65	75
32D17CD 35D20CD 39D22CD	180	519	351	75	80
35D17CD 38D20CD 42D22CD	200	549	380	80	85

MEG20-*****-A3A1F-W**

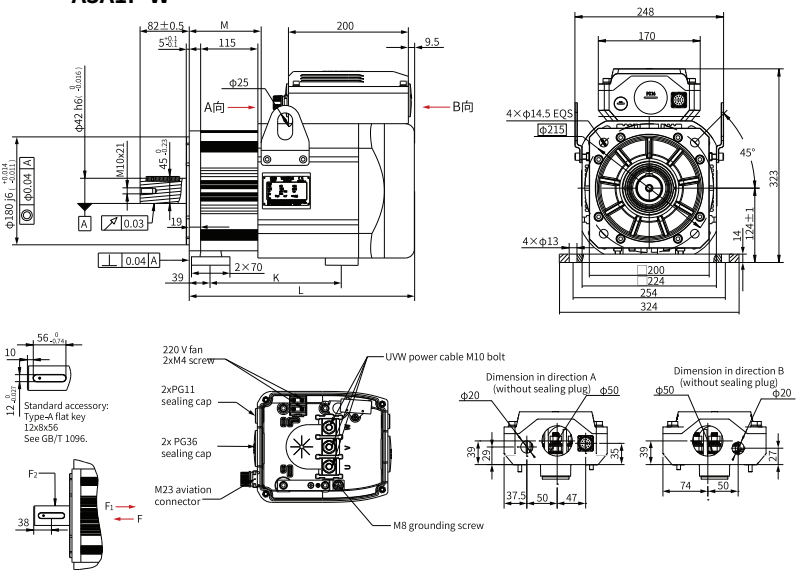

Figure 2-5 Dimensions of MEG20-*******-A3A1F-W servo motors (unit: mm)

Note

- Technical requirements: Dimensional tolerance not specified in the drawing shall following the requirements of class c in GB/T 1804–2000.
- Foot mounting is available. Contact Inovance for details.

Table 2–3 Dimensions and weight of MEG20-*******-A3A1F-W servo motors

Model MEG20-*******-A3A1F	M (mm)	L (mm)	K (mm)	Net weight (kg)	Gross weight (kg)
71C17CD 80C20CD 85C22CD	134	320	151	35	40
11D17CD 13D20CD 13D22CD	134	351	180	40	45
17D17CD 18D20CD 20D22CD	134	377	208	45	50
19D17CD 22D20CD 23D22CD	134	405	237	50	55
23D17CD 25D20CD 27D22CD	135	434	265	55	60
27D17CD 30D20CD 31D22CD	148	462	294	60	70
29D17CD 32D20CD 33D22CD	162	491	322	65	75
32D17CD 35D20CD 39D22CD	180	519	351	75	80
35D17CD 38D20CD 42D22CD	200	549	380	80	85

Dimensions of MEG23-*******-A3A1F servo motors

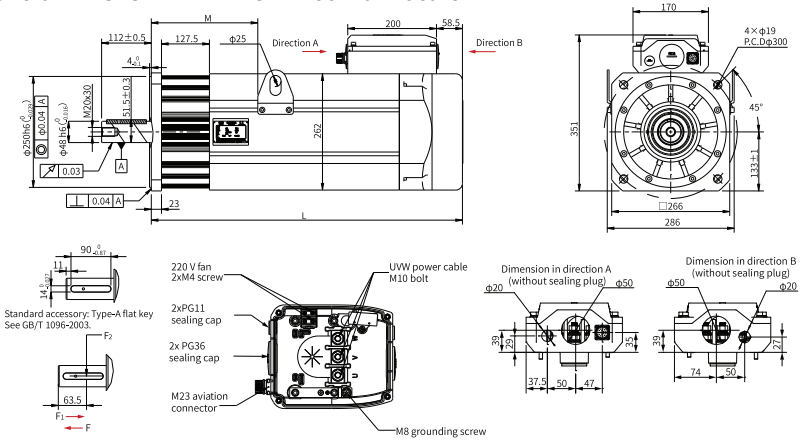

Figure 2-6 Dimensions of MEG23-*******-A3A1F servo motors (unit: mm)

Note

- Technical requirements: Dimensional tolerance not specified in the drawing shall follow the requirements of class C in GB/T 1804-2000.
- Foot mounting is available. For details, contact Inovance.

Table 2–4 Dimensions and weight of MEG23-*******-A3A1F servo motors

Model MEG23-*******-A3A1F	M (mm)	L (mm)	Net weight (kg)	Gross weight (kg)
41D17CD 48D20CD 51D22CD	188	568	90	100
48D17CD 52D20CD 55D22CD	205	611.5	105	110
55D17CD 59D20CD 63D22CD	223	657	115	125
59D17CD 67D20CD 75D22CD	240	701.5	125	135
63D17CD 72D20CD 79D22CD	260	746	135	140

MEG23-*****-A3A1F-K**

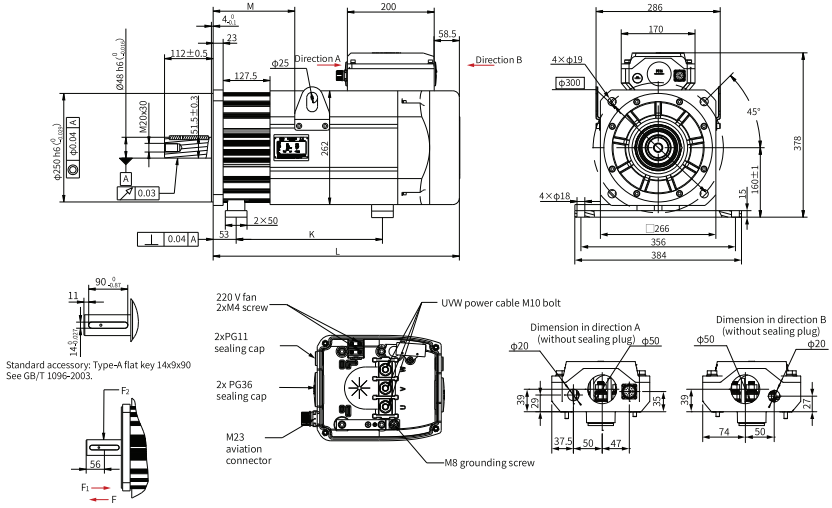

Figure 2-7 Dimensions of MEG23-*******-A3A1F-K servo motors (unit: mm)

Note

- Technical requirements: The tolerance of unmarked dimensions is compliant with GB/T 18042000 Class c.
- Foot mounting is available. Contact Inovance for details.

Table 2–5 Dimensions and weight of MEG23-*******-A3A1F-K servo motors

Model MEG23-*******-A3A1F	M (mm)	L (mm)	K (mm)	Net weight (kg)	Gross weight (kg)
41D17CD 48D20CD 51D22CD	188	568	337	90	100
48D17CD 52D20CD 55D22CD	205	611.5	380	110	120
55D17CD 59D20CD 63D22CD	223	657	426	125	130
59D17CD 67D20CD 75D22CD	240	701.5	470	135	140

Model MEG23-*******-A3A1F	M (mm)	L (mm)	K (mm)	Net weight (kg)	Gross weight (kg)
63D17CD 72D20CD 79D22CD	260	746	514	140	145

MEG23-*****-A3A1F-W**

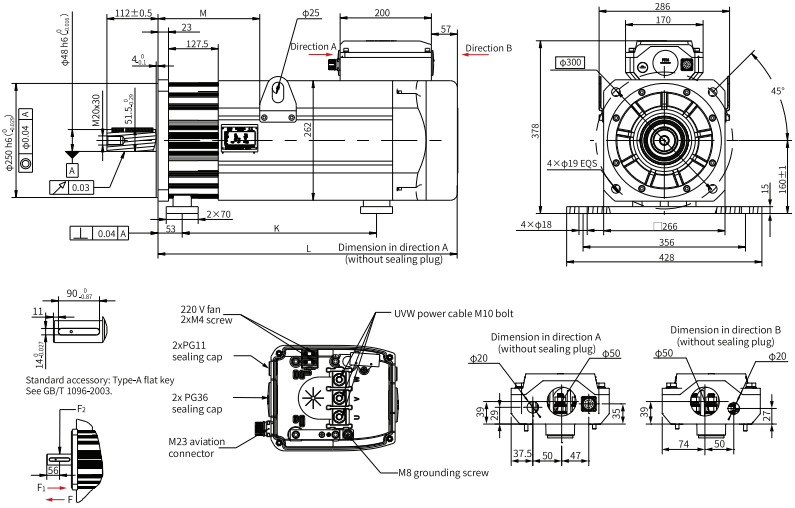

Figure 2-8 Dimensions of MEG23-*******-A3A1F-W servo motors (unit: mm)

Note

- Technical requirements: The tolerance of unmarked dimensions is compliant with GB/T 18042000 Class c.
- Foot mounting is available. Contact Inovance for details.

Table 2–6 Dimensions and weight of MEG23-*******-A3A1F-W servo motors

Model MEG23-*******-A3A1F	M (mm)	L (mm)	K (mm)	Net weight (kg)	Gross weight (kg)
41D17CD 48D20CD 51D22CD	188	568	337	90	100
48D17CD 52D20CD 55D22CD	205	611.5	380	105	110
55D17CD 59D20CD 63D22CD	223	657	426	125	130
59D17CD 67D20CD 75D22CD	240	701.5	470	135	140
63D17CD 72D20CD 79D22CD	260	746	514	140	145

3 General Specifications

3.1 Mechanical Characteristics

Table 3–1 Motor specifications

Item	Specification				
IP rating of enclosure	IP54				
Voltage withstanding level	2160 VAC for 1s (380 V class)				
Insulation resistance 500 VDC	⩾ 20 MΩ				
Maximum shock	Peak acceleration 50 m/s^2; duration: 30 ms				
Max. vibration in radial direction	Acceleration 25 m/s^2; vibration duration: 30 min				
Insulation class	155 (F)				
Cooling mode	IC 416				
Installation mode	IM B35/IM V1				
Duty type	S1				
PT1000 alarm threshold	130°C				
Resistance of PT1000 at 10°C to 30°C	1039 Ω to 1118 Ω				
Ambient temperature	-20°C to +40°C (non-frozen)				
Ambient humidity	20% RH to 90% RH (without condensation)				
Storage temperature	-20°C to +60°C (non-frozen)				
Storage humidity	20% RH to 90% RH (without condensation)				
Rated altitude	Below 1000 m (derating required for altitudes above 1000 m)				
Altitude-based derating	1000 m	2000 m	3000 m	4000 m	5000 m
	1	0.947	0.887	0.824	0.645
Ambient temperature-based derating	40°C	45°C	50°C	55°C	60°C
	1	0.952	0.901	0.855	0.781
Operating location	• Install the drive in a place free from corrosive and inflammable gases and combustible materials, such as the hydrogen sulfide, chlorine, ammonia, sulphur gas, chloridize gas, acid, soda and salt. • Use the motor with oil seal in places with grinding fluid, oil mist, iron powders or cuttings. • Install the motor away from heating sources such as a heating stove. • Do not use the motor in an enclosed environment. Running in an enclosed environment will lead to motor over-temperature, which shortens its service life.				

Table 3–2 Fan specifications

Item	G23-SC225A1-068-00M	G20-SC175A1-068-000
Rated voltage	230 VAC	
Rated voltage range	207 VAC to 253 VAC	
Capacitance (±5%)	4 μF < 450 V	1.5 μF < 450 V
Current (±10%)	0.62 A/0.87 A	0.23 A/0.24 A
Input power (±10%)	140 W/198 W	48 W/55 W
Noise (-7/+3)	71 dB/73 dB	61 dB/64 dB

Item	G23-SC225A1-068-00M	G20-SC175A1-068-000
IP rating of enclosure	IP54	IP54 (when installed in axis horizontal direction)
Insulation class	F	

3.2 Electrical Specifications

Table 3–3 Motor performance (flange size 200 x 200 at 2200 rpm)

Item		Unit	Model: MEG20-XXXXXX-A3A1F								
			85C22 CD	13D22 CD	20D22 CD	23D22 CD	27D22 CD	31D22 CD	33D22 CD	39D22 CD	42D22 CD
Rated voltage	U_N	V	380								
Rated current	I_N	A	15.7	21.6	33.8	38.9	45.8	54.8	57.3	65.8	71.0
Rated speed	n_N	rpm	2200	2200	2200	2200	2200	2200	2200	2200	2200
Rated frequency	f_N	Hz	146.67	146.67	146.67	146.67	146.67	146.67	146.67	146.67	146.67
Rated torque	T_N	N·m	37	58	83	96	116	135	142	165	178
Rated power	P_N	kW	8.5	13.4	19.1	22.1	26.7	31.1	32.7	38.0	41.2
Rated point efficiency	η	%	91.6	92.3	93.1	93.2	93.6	93.7	94.3	95.1	95.2
65 k power	P (65 k)	kW	7.8	10.7	13.0	16.4	21.0	26.0	-	-	-
65 k torque	T (65 k)	N·m	34.0	46.5	56.5	71.0	91.0	113.0	-	-	-
65 k current	I (65 k)	A	13.60	16.90	21.70	27.70	35.40	44.80	-	-	-
Max. current	I_{max}	A	48.0	48.0	55.5	66	84.0	84.0	112.5	135.0	138
Max. speed	N_{max}	rpm	3000								
Torque corresponding to max. speed	$T_{N·max}$	N·m	54.3	72.9	108.5	138.0	163	165.5	215.0	263.6	262.7
Peak current at rated speed	$I_{N·max}$	A	48	48	55.5	66	84	84	112.5	135	138
Peak torque at rated speed	$T_{N·max}$	N·m	77	101.7	138.5	173.7	199.9	203	284	334.5	339.5
D-axis incremental inductance	L_d	mH	6.301	4.901	2.633	2.042	1.79	1.481	1.786	1.2	1.032
Q-axis incremental inductance	L_q	mH	13.3	11.12	6.134	4.551	4.254	3.483	4.063	2.863	2.664
Line resistance at 20°C	R_w	Ω	1.1330	0.6811	0.3764	0.2724	0.2072	0.1728	0.1897	0.1296	0.1308
Electromagnet torque constant at 20°C	K_t	N·m/A	2.7	2.88	2.7	2.62	2.65	2.61	2.93	2.61	2.72
Axis torque constant at 20°C	K_t	N·m/A	2.36	2.68	2.45	2.47	2.53	2.46	2.47	2.50	2.51

Item		Unit	Model: MEG20-XXXXXX-A3A1F								
			85C22 CD	13D22 CD	20D22 CD	23D22 CD	27D22 CD	31D22 CD	33D22 CD	39D22 CD	42D22 CD
Back EMF constant at 20°C	K_e	V/krpm	163.0	174.0	163.0	158	161	158.0	177.0	158.0	165
Back EMF temperature coefficient	dK_e/dT	%/°C	-0.1								
Stall current	I_o	A	19.6	26.2	42.5	46.0	55.0	63.0	68.0	79.3	82.9
Stall torque	T_o	N·m	46.3	70.4	104.4	114.2	139.1	155.3	168.9	199	208
Motor weight	M	kg	48.0	56.0	64.0	72.0	80.0	88.0	96.0	106.0	73
Rotor moment of inertia	J_m	$kg \cdot cm^2$	70.0	90.0	111.0	132.0	152.0	173.0	194.0	215.0	221

Table 3–4 Motor performance (flange size 200 x 200 at 2000 rpm)

Item		Unit	Model: MEG20-XXXXXX-A3A1F								
			80C20 CD	13D20 CD	18D20 CD	22D20 CD	25D20 CD	30D20 CD	32D20 CD	35D20 CD	38D20 CD
Rated voltage	U_N	V	380								
Rated current	I_N	A	13.5	21.1	28.5	32.2	41.1	49.0	52.8	56.6	63.5
Rated speed	n_N	rpm	2000	2000	2000	2000	2000	2000	2000	2000	2000
Rated frequency	f_N	Hz	133.33	133.33	133.33	133.33	133.33	133.33	133.33	133.33	133.33
Rated torque	T_N	N·m	38	59	85	102	120	140	149	168	181
Rated power	P_N	kW	8.0	12.4	17.8	21.4	25.1	29.3	31.2	35.2	37.9
Rated point efficiency	η	%	91.4	92.1	93.1	93.2	93.4	93.6	94.3	95.1	95.2
65 k power	P (65 k)	kW	7.3	10.1	11.3	15.7	19.9	25.1	-	-	-
65 k torque	T (65 k)	N·m	35.0	48.0	54.0	75.0	95.0	120.0	-	-	-
65 k current	I (65 k)	A	11.70	16.40	16.30	24.10	32.00	40.80	-	-	-
Max. current	I_{max}	A	48.0	48.0	55.5	66	84.0	84.0	112.5	135	138
Max. speed	N_{max}	rpm	3000								
Torque corresponding to max. speed	$T_{N \cdot max}$	N·m	48	74.4	89.9	127.6	156.5	165.5	220.5	233.1	246.9
Peak current at rated speed	$I_{N \cdot max}$	A	48	48	55.5	66	84	84	112.5	135	138
Peak torque at rated speed	$T_{N \cdot max}$	N·m	74.9	115.2	136	185.6	226	225	307.3	352.9	357.9
D-axis incremental inductance	L_d	mH	7.554	5.258	4.236	2.832	2.454	2.03	1.696	1.64	1.384
Q-axis incremental inductance	L_q	mH	16.14	11.53	8.864	7.014	5.776	4.748	3.92	4.19	3.532

Item		Unit	Model: MEG20-XXXXXX-A3A1F								
			80C20 CD	13D20 CD	18D20 CD	22D20 CD	25D20 CD	30D20 CD	32D20 CD	35D20 CD	38D20 CD
Line resistance at 20°C	R_w	Ω	1.5560	0.8909	0.6313	0.4407	0.2901	0.2432	0.1897	0.2000	0.1730
Electromagnet torque constant at 20°C	K_t	N·m/A	3.14	3.09	3.18	3.32	3.10	3.02	2.94	3.27	3.10
Axis torque constant at 20°C	K_t	N·m/A	2.81	2.79	2.98	3.16	2.91	2.85	2.82	2.96	2.85
Back EMF constant at 20°C	K_e	V/krpm	190	187	192	201	187	183	177	198	187
Back EMF temperature coefficient	dK_e/dT	%/°C	-0.1								
Stall current	I_o	A	15.8	25.3	34.6	39.5	50.6	59.0	64.4	72.4	81.4
Stall torque	T_o	N·m	44.6	70.7	103.2	125	147.9	169.6	181.8	215	232
Motor weight	M	kg	48.0	56.0	64.0	72.0	80.0	88.0	96.0	106.0	73
Rotor moment of inertia	J_m	$kg \cdot cm^2$	70.0	90.0	111.0	132.0	152.0	173.0	194.0	215.0	221

Table 3–5 Motor performance (flange size 200 x 200 at 1700 rpm)

Item		Unit	Model: MEG20-XXXXXX-A3A1F								
			71C17 CD	11D17 CD	17D17 CD	19D17 CD	23D17 CD	27D17 CD	29D17 CD	32D17 CD	35D17 CD
Rated voltage	U_N	V	380								
Rated current	I_N	A	13.0	19.5	27.4	30.0	36.8	43.0	45.5	48.8	56.5
Rated speed	n_N	rpm	1700	1700	1700	1700	1700	1700	1700	1700	1700
Rated frequency	f_N	Hz	113.33	113.33	113.33	113.33	113.33	113.33	113.33	113.33	113.33
Rated torque	T_N	N·m	40	61	93	107	125	150	158	178	191
Rated power	P_N	kW	7.1	10.9	16.6	19.0	22.3	26.7	28.1	31.7	34.1
Rated point efficiency	η	%	91.4	92.1	93.1	93.2	93.4	93.6	94.2	95.1	95.2
65 k power	P (65 k)	kW	6.6	8.7	10.9	14.1	17.6	23.0	-	-	-
65 k torque	T (65 k)	N·m	37.0	49.0	61.0	79.0	99.0	129.0	-	-	-
65 k current	I (65 k)	A	11.50	15.00	17.70	22.30	28.70	36.50	-	-	-
Max. current	I_{max}	A	48.0	48.0	55.5	66	84.0	84.0	112.5	135	138
Max. speed	N_{max}	rpm	3000								
Torque corresponding to max. speed	$T_{N \cdot max}$	N·m	43.7	63	92.6	110.3	142.4	158.3	202.3	191.8	226.9
Peak current at rated speed	$I_{N \cdot max}$	A	48	48	55.5	66	84	84	112.5	135	138

Item		Unit	Model: MEG20-XXXXXX-A3A1F								
			71C17 CD	11D17 CD	17D17 CD	19D17 CD	23D17 CD	27D17 CD	29D17 CD	32D17 CD	35D17 CD
Peak torque at rated speed	$T_{N\cdot max}$	N·m	81.4	121.4	163.7	200	249.6	266.7	344.5	359.3	402.3
D-axis incremental inductance	L_d	mH	10.44	7.3	4.997	4.477	3.199	3.018	2.391	2.908	1.946
Q-axis incremental inductance	L_q	mH	21.37	16.08	11.15	9.883	7.538	6.939	5.416	6.69	4.918
Line resistance at 20°C	R_w	Ω	1.7040	1.1280	0.6590	0.5837	0.3825	0.3310	0.2813	0.2974	0.2326
Electromagnet torque constant at 20°C	K_t	N·m/A	3.44	3.54	3.54	3.74	3.54	3.61	3.52	3.92	3.61
Axis torque constant at 20°C	K_t	N·m/A	3.07	3.12	3.39	3.56	3.39	3.48	3.46	3.64	3.38
Back EMF constant at 20°C	K_e	V/krpm	208	214	214	226	214	219	213	237	219
Back EMF temperature coefficient	dK_e/dT	%/°C	-0.1								
Stall current	I_o	A	15.4	22.5	30.6	36.7	42.6	50.6	54.3	58.7	68.3
Stall torque	T_o	N·m	47.6	70.7	103.9	131.2	145	176.8	188.9	214.3	231
Motor weight	M	kg	48	56	64	72	80	88	96	106	73
Rotor moment of inertia	J_m	$kg\cdot cm^2$	70	90	111	132	152	173	194	215	221

Table 3–6 Motor performance (flange size 230 x 230 at 2200 rpm)

Item		Unit	Model: MEG23-XXXXXX-A3A1F				
			51D22CD	55D22CD	63D22CD	75D22CD	79D22CD
Rated voltage	U_N	V	380				
Rated current	I_N	A	88.0	92.5	112.5	125.2	134.5
Rated speed	n_N	rpm	2200	2200	2200	2200	2200
Rated frequency	f_N	Hz	146.67	146.67	146.67	146.67	146.67
Rated torque	T_N	N·m	220	240	270	323	341
Rated power	P_N	kW	50.7	55.3	62.2	74.4	78.6
Rated point efficiency	η	%	95.2	95.4	95.5	95.6	95.7
65 k power	P (65 k)	kW	-	-	-	-	-
65 k torque	T (65 k)	N·m	-	-	-	-	-
65 k current	I (65 k)	A	-	-	-	-	-
Max. current	I_{max}	A	135	168	202.5	202.5	202.5
Max. speed	$N_{\cdot max}$	rpm	3000				

Item		Unit	Model: MEG23-XXXXXX-A3A1F				
			51D22CD	55D22CD	63D22CD	75D22CD	79D22CD
Torque corresponding to max. speed	$T_{N\cdot max}$	N·m	244.1	303.6	377.1	384.3	398.81
Peak current at rated speed	$I_{N\cdot max}$	A	135	168	202.5	202.5	202.5
Peak torque at rated speed	$T_{N\cdot max}$	N·m	311.4	372.1	464	469.5	491.5
D-axis incremental inductance	L_d	mH	1.54	1.458	1.066	1.056	0.976
Q-axis incremental inductance	L_q	mH	2.729	2.48	1.86	1.83	1.707
Line resistance at 20°C	R_w	Ω	0.1098	0.0994	0.0709	0.0664	0.0642
Electromagnet torque constant at 20°C	K_t	N·m/A	2.72	2.76	2.68	2.72	2.87
Axis torque constant at 20°C	K_t	N·m/A	2.5	2.59	2.4	2.58	2.53
Back EMF constant at 20°C	K_e	V/krpm	164	167	162	164	173
Back EMF temperature coefficient	dK_e/dT	%/°C	-0.1				
Stall current	I_o	A	98.0	109.0	121.5	147.5	158.1
Stall torque	T_o	N·m	248	283	324	381.5	401
Motor weight	M	kg	101	111	121	131	133
Rotor moment of inertia	J_m	$kg\cdot cm^2$	375	427	479	531	605

Table 3–7 Motor performance (flange size 230 x 230 at 2000 rpm)

Item		Unit	Model: MEG23-XXXXXX-A3A1F				
			48D20CD	52D20CD	59D20CD	67D20CD	72D20CD
Rated voltage	U_N	V	380				
Rated current	I_N	A	81.7	87.0	98.8	117.4	126.5
Rated speed	n_N	rpm	2000	2000	2000	2000	2000
Rated frequency	f_N	Hz	133.33	133.33	133.33	133.33	133.33
Rated torque	T_N	N·m	227	245	280	322	348
Rated power	P_N	kW	47.5	51.3	58.6	67.4	72.8
Rated point efficiency	η	%	95.2	95.4	95.5	95.6	95.7
65 k power	P (65 k)	kW	-	-	-	-	-

Item		Unit	Model: MEG23-XXXXXX-A3A1F				
			48D20CD	52D20CD	59D20CD	67D20CD	72D20CD
65 k torque	T (65 k)	N·m	-	-	-	-	-
65 k current	I (65 k)	A	-	-	-	-	-
Max. current	I_{max}	A	135	168	202.5	202.5	202.5
Max. speed	N_{max}	rpm	3000				
Torque corresponding to max. speed	$T_{N·max}$	N·m	244.1	303.6	377.1	384.3	385.6
Peak current at rated speed	$I_{N·max}$	A	135	168	202.5	202.5	202.5
Peak torque at rated speed	$T_{N·max}$	N·m	344.4	422.1	504	523.5	553.2
D-axis incremental inductance	L_d	mH	1.917	1.853	1.37	1.105	1.181
Q-axis incremental inductance	L_q	mH	3.284	3.332	2.543	2.006	2.056
Line resistance at 20°C	R_w	Ω	0.1403	0.1246	0.0997	0.0791	0.0765
Electromagnet torque constant at 20°C	K_t	N·m/A	3.04	3.16	3.11	2.96	3.16
Axis torque constant at 20°C	K_t	N·m/A	2.77	2.81	2.83	2.74	2.75
Back EMF constant at 20°C	K_e	V/krpm	183.5	190.79	188	179	192
Back EMF temperature coefficient	dK_e/dT	%/°C	-0.1				
Stall current	I_o	A	97.0	105.5	120.5	148.0	161.7
Stall torque	T_o	N·m	269.6	297.2	341.6	406	445
Motor weight	M	kg	101	111	121	131	133
Rotor moment of inertia	J_m	$kg·cm^2$	375	427	479	531	605

Table 3–8 Motor performance (flange size 230 x 230 at 1700 rpm)

Item		Unit	Model: MEG23-XXXXXX-A3A1F				
			41D17CD	48D17CD	55D17CD	59D17CD	63D17CD
Rated voltage	U_N	V	380				
Rated current	I_N	A	70.8	79.5	88.4	99.7	111.5
Rated speed	n_N	rpm	1700	1700	1700	1700	1700
Rated frequency	f_N	Hz	113.33	113.33	113.33	113.33	113.33
Rated torque	T_N	N·m	233	268	305	325	357

Item		Unit	Model: MEG23-XXXXXX-A3A1F				
			41D17CD	48D17CD	55D17CD	59D17CD	63D17CD
Rated power	P_N	kW	41.4	47.7	54.3	57.8	63.7
Rated point efficiency	η	%	95.2	95.4	95.5	95.6	95.7
65 k power	P (65 k)	kW	-	-	-	-	-
65 k torque	T (65 k)	N·m	-	-	-	-	-
65 k current	I (65 k)	A	-	-	-	-	-
Max. current	I_{max}	A	135	168	202.5	202.5	202.5
Max. speed	$N_{\cdot max}$	rpm	3000				
Torque corresponding to max. speed	$T_{N\cdot max}$	N·m	208.8	237.4	264.4	318.7	332.7
Peak current at rated speed	$I_{N\cdot max}$	A	135	168	202.5	202.5	202.5
Peak torque at rated speed	$T_{N\cdot max}$	N·m	357.8	410.8	480.1	550	587
D-axis incremental inductance	L_d	mH	2.585	2.31	2.234	1.723	1.648
Q-axis incremental inductance	L_q	mH	4.419	3.901	3.899	2.978	2.849
Line resistance at 20°C	R_w	Ω	0.1895	0.1619	0.1380	0.1128	0.1064
Electromagnet torque constant at 20°C	K_t	N·m/A	3.51	3.51	3.80	3.46	3.44
Axis torque constant at 20°C	K_t	N·m/A	3.29	3.37	3.45	3.25	3.2
Back EMF constant at 20°C	K_e	V/krpm	212.5	212	229.9	209.2	227
Back EMF temperature coefficient	dK_e/dT	%/℃	-0.1				
Stall current	I_o	A	85.1	95.5	106.5	117.6	132.7
Stall torque	T_o	N·m	279.9	322.2	367.6	383.5	425
Motor weight	M	kg	101	111	121	131	133
Rotor moment of inertia	J_m	$kg\cdot cm^2$	375	427	479	531	605

3.3 Torque-Speed Characteristics

Table 3–9 1700 rpm rated speed

MEG20-71C17CD-A3A1F

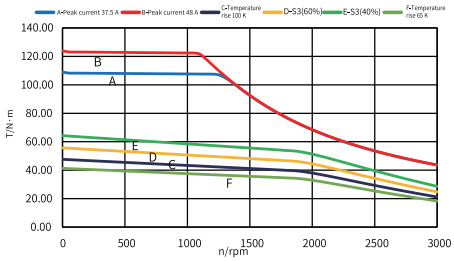

MEG20-11D17CD-A3A1F

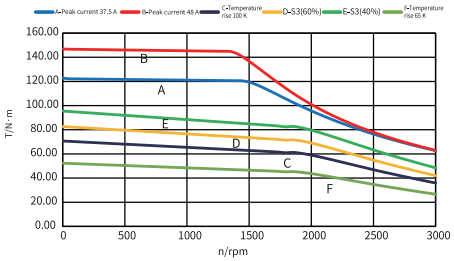

MEG20-17D17CD-A3A1F

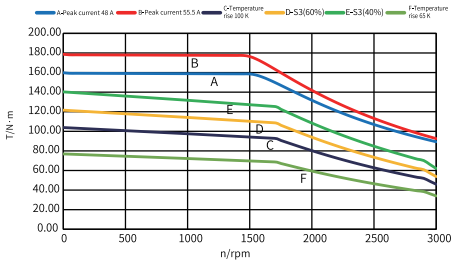

MEG20-19D17CD-A3A1F

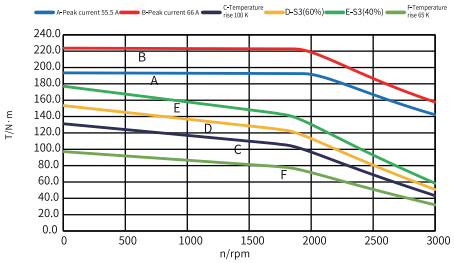

MEG20-23D17CD-A3A1F

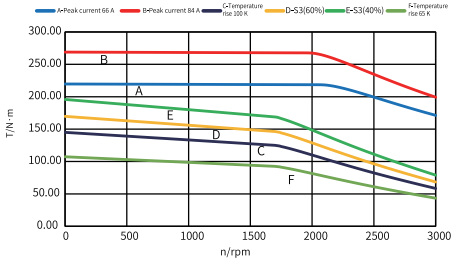

MEG20-27D17CD-A3A1F

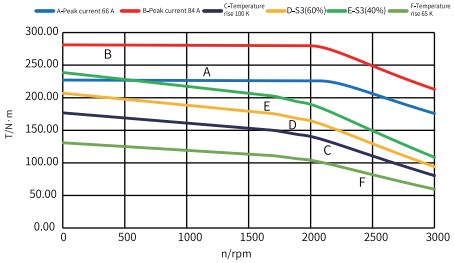

MEG20-29D17CD-A3A1F

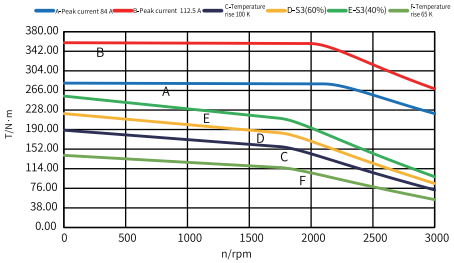

MEG20-32D17CD-A3A1F

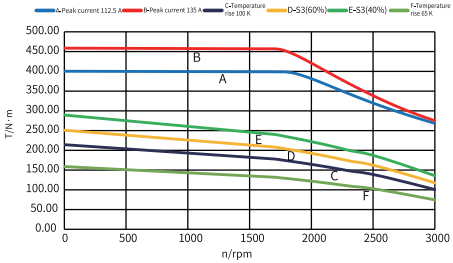

MEG23-41D17CD-A3A1F

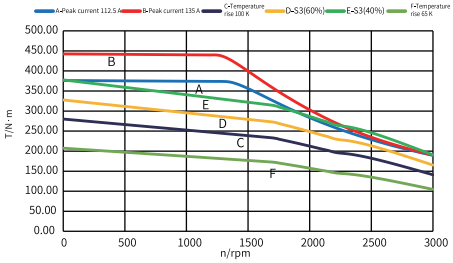

MEG23-48D17CD-A3A1F

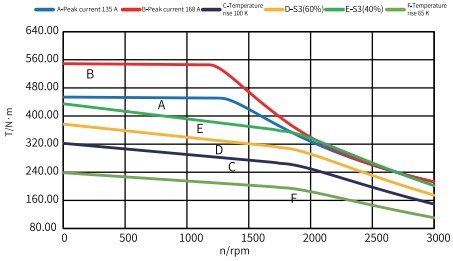

MEG23-55D17CD-A3A1F

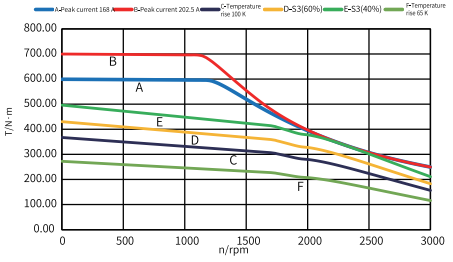

MEG23-59D17CD-A3A1F

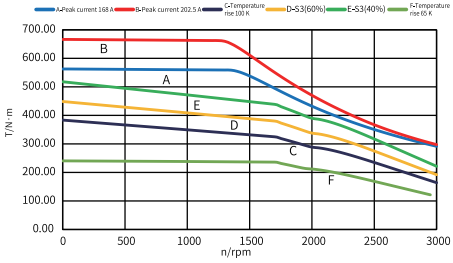

MEG23-63D17CD-A3A1F

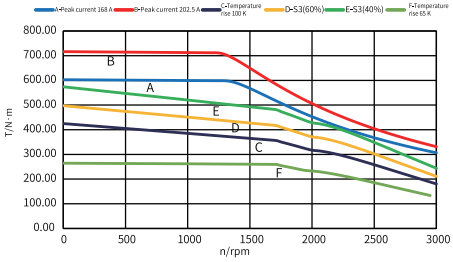

MEG20-35D17CD-A3A1F

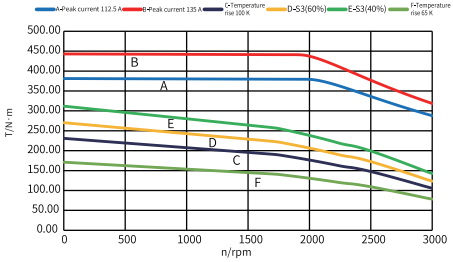

Table 3–10 2000 rpm rated speed

MEG20-80C20CD-A3A1F

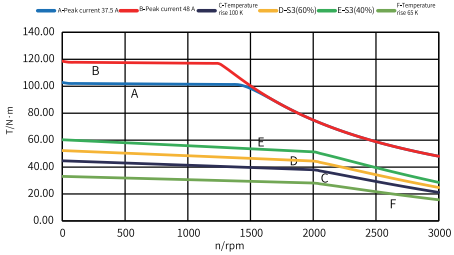

MEG20-13D20CD-A3A1F

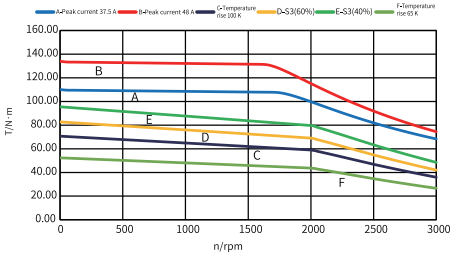

MEG20-18D20CD-A3A1F

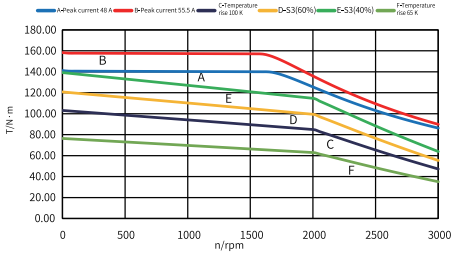

MEG20-22D20CD-A3A1F

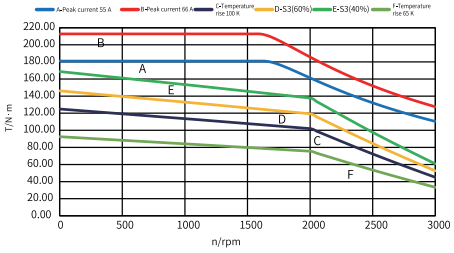

MEG20-25D20CD-A3A1F

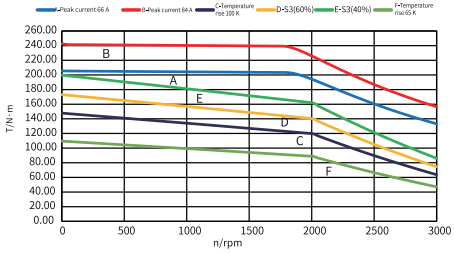

MEG20-30D20CD-A3A1F

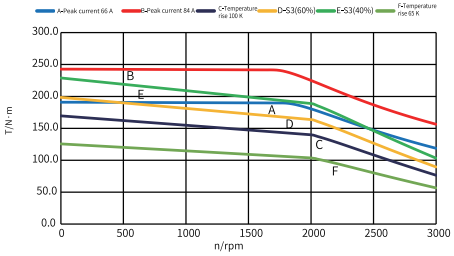

MEG20-32D20CD-A3A1F

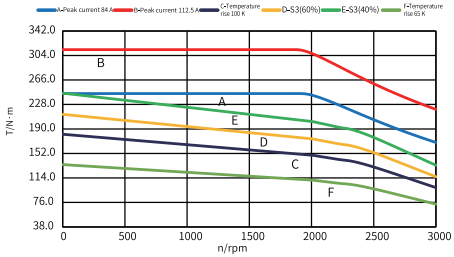

MEG20-35D20CD-A3A1F

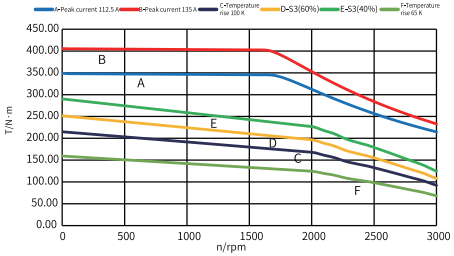

MEG23-48D20CD-A3A1F

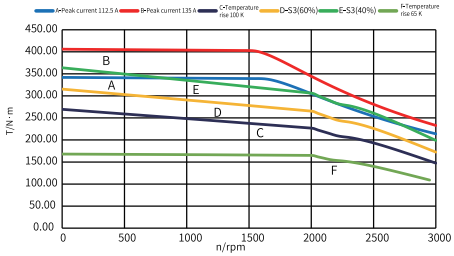

MEG23-52D20CD-A3A1F

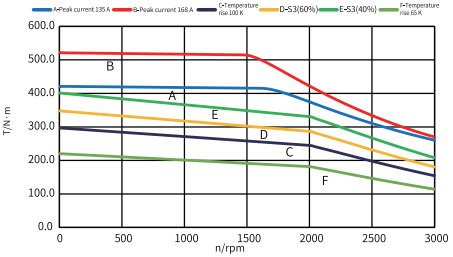

MEG23-59D20CD-A3A1F

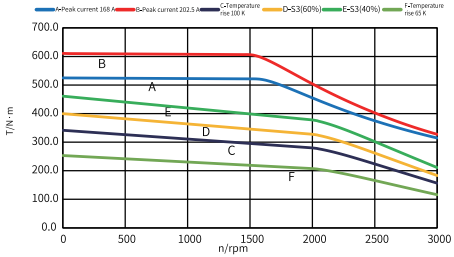

MEG23-67D20CD-A3A1F

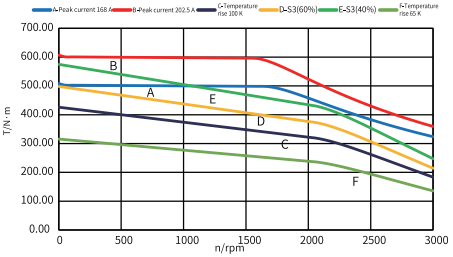

MEG23-72D20CD-A3A1F

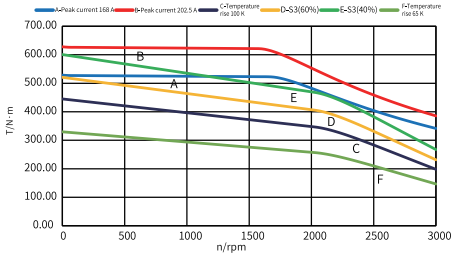

MEG20-38D20CD-A3A1F

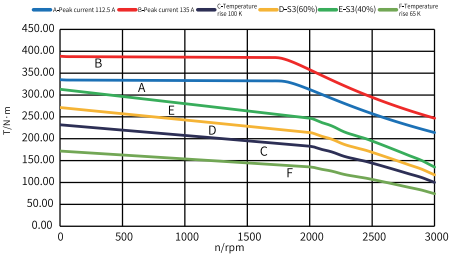

Table 3–11 2200 rpm rated speed

MEG20-85C22CD-A3A1F

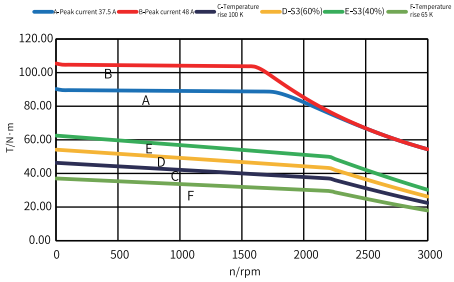

MEG20-13D22CD-A3A1F

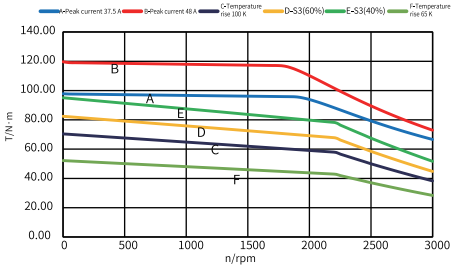

MEG20-20D22CD-A3A1F

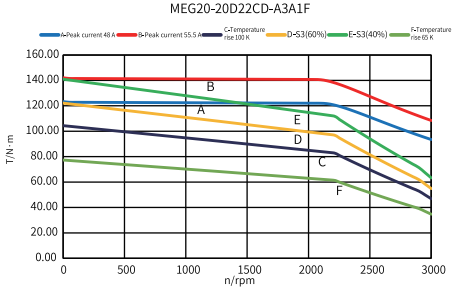

MEG20-23D22CD-A3A1F

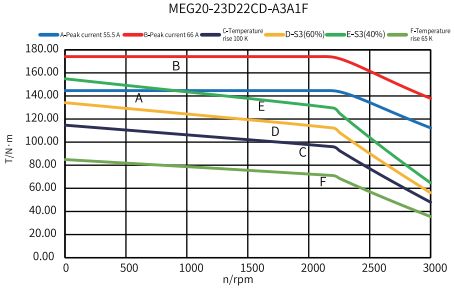

MEG20-27D22CD-A3A1F

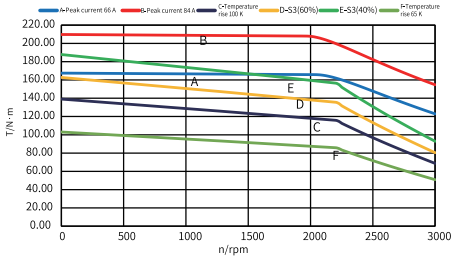

MEG20-31D22CD-A3A1F

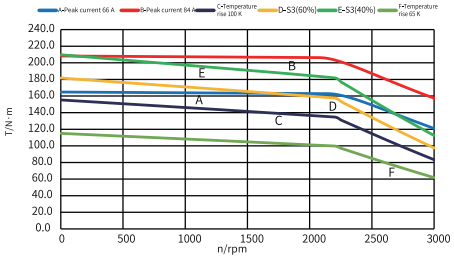

MEG20-33D22CD-A3A1F

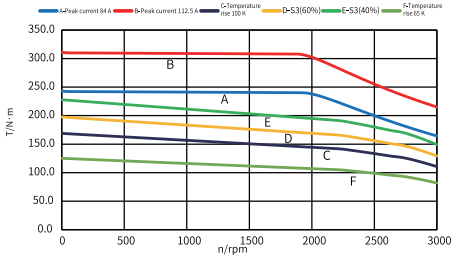

MEG20-39D22CD-A3A1F

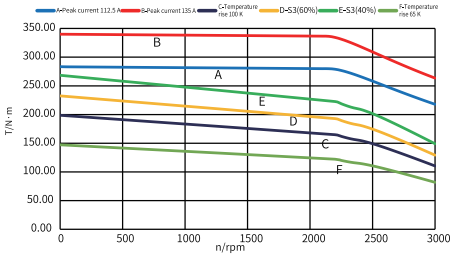

MEG23-51D22CD-A3A1F

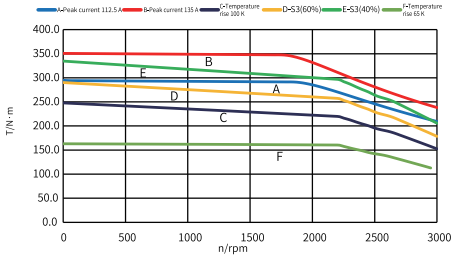

MEG23-55D22CD-A3A1F

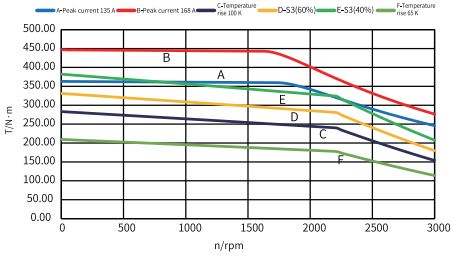

MEG23-63D22CD-A3A1F

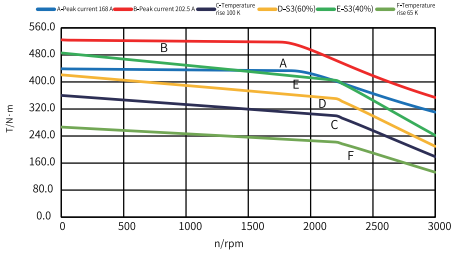

MEG23-75D22CD-A3A1F

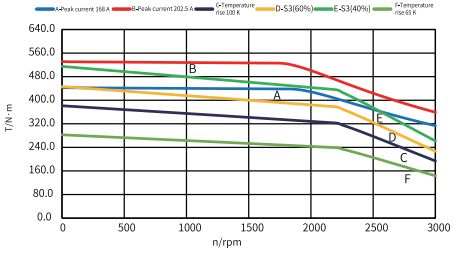

MEG23-79D22CD-A3A1F

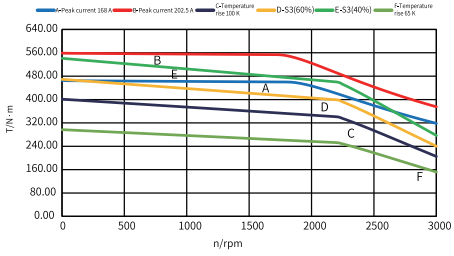

MEG20-42D22CD-A3A1F

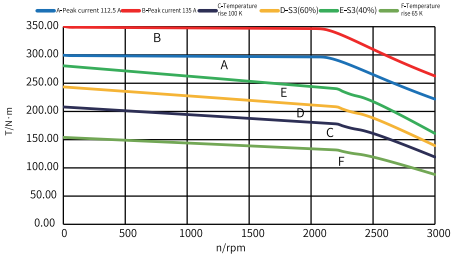

3.4 Radial Force and Axial Force

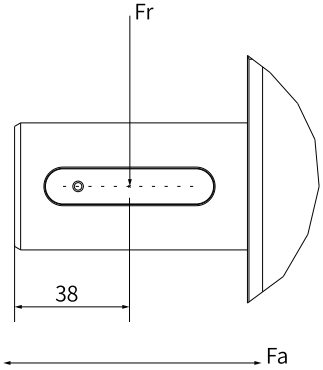

Figure 3-1 Radial and axial force diagram

Table 3–12 Radial and axial force of servo motor bearing (50000h)

Motor model	Radial force Fr (N)	Axial force Fa (N)
MEG20-71C17CD-A3A1F	1681	290
MEG20-11D17CD-A3A1F	1652	280
MEG20-17D17CD-A3A1F	1611	270
MEG20-19D17CD-A3A1F	1662	300
MEG20-23D17CD-A3A1F	1586	270
MEG20-27D17CD-A3A1F	1376	230
MEG20-29D17CD-A3A1F	1391	230
MEG20-32D17CD-A3A1F	1149	190
MEG20-35D17CD-A3A1F	1149	190
MEG23-41D17CD-A3A1F	2541	540
MEG23-48D17CD-A3A1F	2374	420
MEG23-55D17CD-A3A1F	2198	390
MEG23-59D17CD-A3A1F	2010	350
MEG23-63D17CD-A3A1F	2010	350
MEG20-80C20CD-A3A1F	1681	290
MEG20-13D20CD-A3A1F	1660	260
MEG20-18D20CD-A3A1F	1640	260
MEG20-22D20CD-A3A1F	1599	260
MEG20-25D20CD-A3A1F	1586	270
MEG20-30D20CD-A3A1F	1376	230
MEG20-32D20CD-A3A1F	1391	230
MEG20-35D20CD-A3A1F	1149	190
MEG20-38D20CD-A3A1F	1149	190
MEG23-48D20CD-A3A1F	2360	520
MEG23-52D20CD-A3A1F	2374	420

Motor model	Radial force Fr (N)	Axial force Fa (N)
MEG23-59D20CD-A3A1F	2198	390
MEG23-67D20CD-A3A1F	2010	350
MEG23-72D20CD-A3A1F	1916	520
MEG20-85C22CD-A3A1F	1681	290
MEG20-13D22CD-A3A1F	1652	280
MEG20-20D22CD-A3A1F	1611	270
MEG20-23D22CD-A3A1F	1662	300
MEG20-27D22CD-A3A1F	1586	270
MEG20-31D22CD-A3A1F	1376	230
MEG20-33D22CD-A3A1F	1391	230
MEG20-39D22CD-A3A1F	1149	190
MEG20-42D22CD-A3A1F	1149	190
MEG23-51D22CD-A3A1F	2420	430
MEG23-55D22CD-A3A1F	2374	420
MEG23-63D22CD-A3A1F	2198	290
MEG23-75D22CD-A3A1F	2010	350
MEG23-79D22CD-A3A1F	1905	500

3.5 PT1000 Resistor Temperature Characteristic Curve

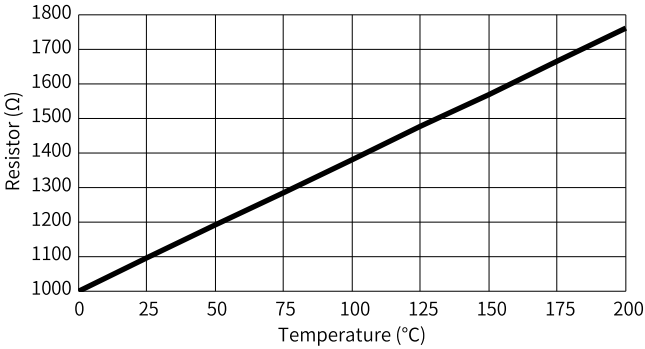

4 Wiring

4.1 System Wiring Diagram

Install necessary peripheral components on the input/output side of the drive to ensure safety and stability of the hydraulic system that used to control permanent magnet synchronous motors. The system components are as shown in the following figure.

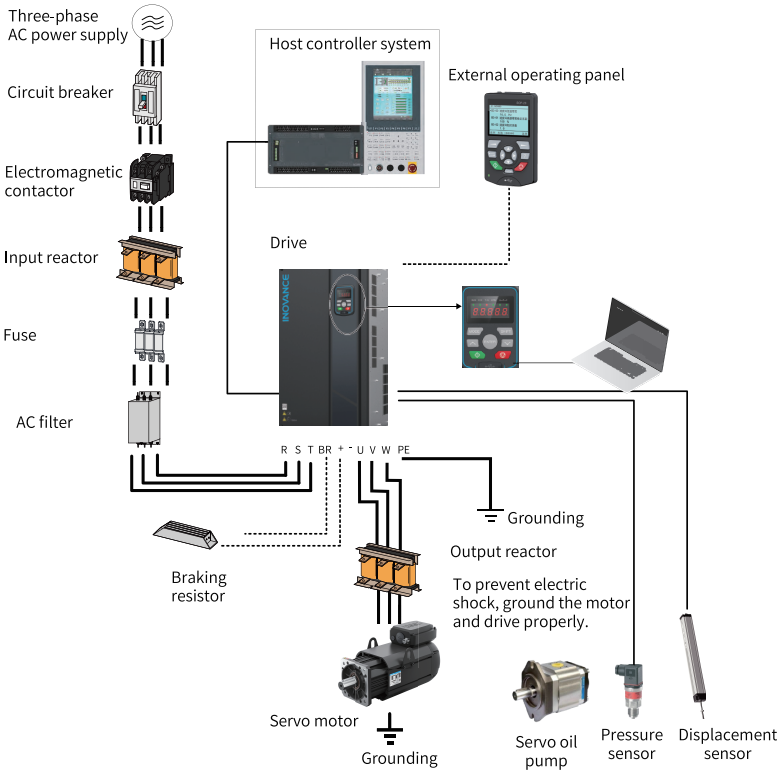

Figure 4-1 System components

Name	Installation position	Function description
Circuit breaker	Between the power supply and the servo drive input side	Short circuit breaker: Cuts off the power supply when overcurrent occurs on downstream devices to prevent accidents. Earth leakage circuit breaker (ELCB): Provides protection against potential leakage current during operation to prevent electric shock which may cause a fire. Select a proper ELCB based on actual applications.
Electromag netic Contactor	Between the circuit breaker and servo drive input side	Do not start/stop the servo drive frequently by switching on/off the contactor (at an interval less than 1 h) or start the servo drive directly through the contactor.
Input reactor	Input side of the servo drive	Improves the power factor on the input side. Eliminates harmonics on the input side and prevents other devices from being damaged due to voltage waveform distortion. Eliminates input current unbalance caused by inter-phase unbalance. It is recommended to install the input reactor in case of power grid suffering from pollution and harmonics.
Fuse	Between the power supply and the servo drive input side	Provides protection against short circuit and protects downstream rectifier module semiconductors.
AC filter	Input side of the servo drive	Reduces the conduction and radiation interference generated by the AC drive to external devices. Reduces conductive interference flowed from the power supply to the servo drive, improving the anti-interference capacity of the servo drive.
Braking resistor	Input side of the servo drive	The braking unit or braking resistor consumes regenerative energy during motor deceleration.
Output reactor	Between the servo motor output side and the motor (close to the servo drive)	Harmonics are present in the output side of the servo drive. When the motor is far away from the drive, there is high distributed capacitance in the circuit, Certain harmonics may cause resonance in the circuit, which brings the following adverse effects: • Degrades the motor insulation performance and damages the motor in the long run. • Generates large leakage current, thereby activating frequent protection trips of the drive. It is recommended to install an output AC reactor if the distance between the servo drive and the motor exceeds 100 m.
Output magnetic ring	Output side of the drive	Reduces the bearing current.

Name	Installation position	Function description
Host controller	Some control signals are connected to the drive.	Controls the overall operations, sends commands to the drive, and exchanges data with the drive.
Servo motor	Output or input side of the drive	Use a proper motor.
Servo oil pump	Connected to the motor	Provides flow and pressure for the hydraulic system.
Pressure sensor	Oil circuit (feedback signal connected to the drive)	Provides pressure feedback analog signals for the hydraulic circuit.
Displacement sensor	Template of the injection molding machine	Provides position feedback analog signals for closed-loop position control.
External operating panel (optional)	Connected to the CN7 interface through a network cable	Used for commissioning and parameter setting.

4.2 Connecting Power Cables

The cross-sectional dimensions of the power cable and motor terminals must meet the requirements and be connected according to *"Figure 4–2 Wiring diagram" on page 45*.

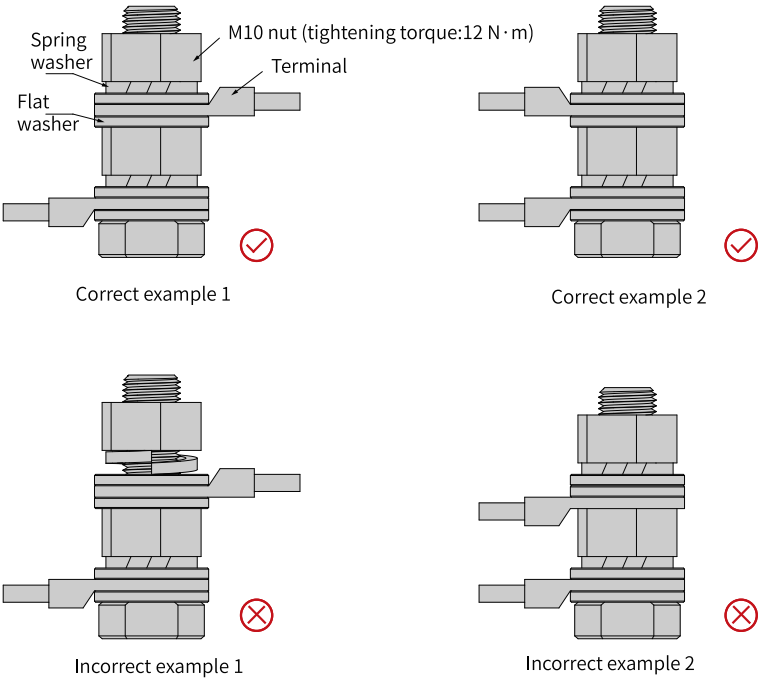

Figure 4-2 Wiring diagram

4.3 Encoder Terminal

The encoder terminal is M23 aviation connector.

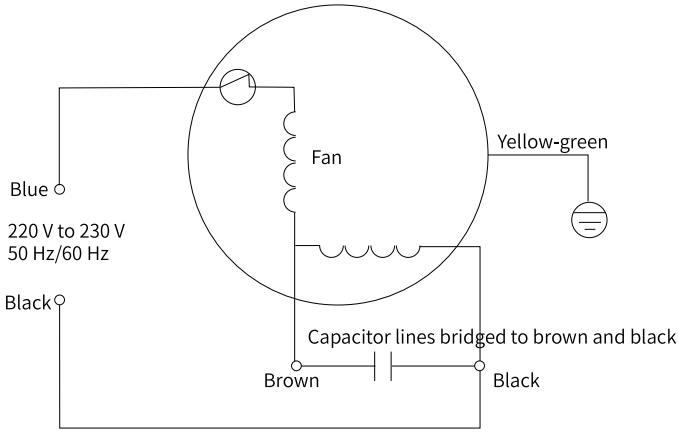

Figure 4-3 Wiring of the fan

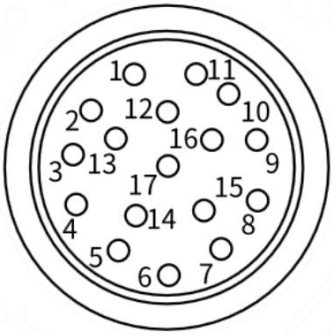

Figure 4-4 Aviation connector

Name	23bit.0 (absolute encoder)							PT1000	
Pin assignment	PS+	PS-	VB+	VB-	+5V	GND	Shield	PT1000	PT1000
Encoder cable	Yellow	Yellow-black	Blue	Blue-black	Red	Black	-	White	Red
17pin aviation connector	10	7	5	6	16	9	15	4	14
DB9 male	1	2	3	4	7	8	Enclosure	5	9

4.4 Routing in the Junction Box

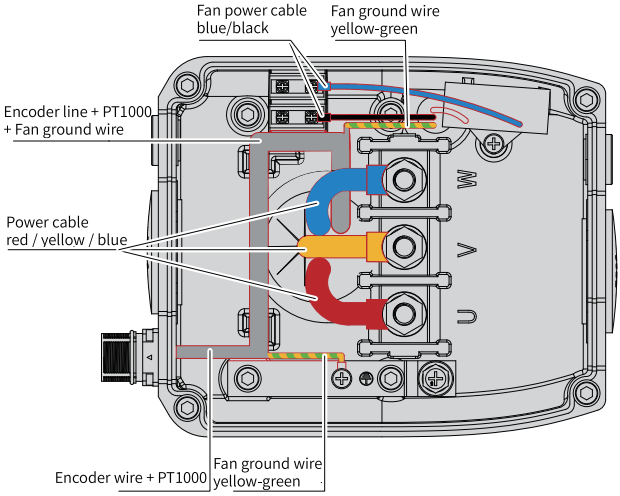

Figure 4-5 Routing diagram of junction box

Table 4–1 Recommended tightening torque of junction box screws

Screws/Nuts	m2.5	M4	M6	M6 (junction box cover)	M8 (grounding screw)	M10 (nut)
Tightening Torque/N·m	0.55	1.2	5	2.5	6	12

5 Maintenance Cycle

To keep the servo drive and servo motor in good condition, perform parts replacement based on the following table. Contact Inovance or Inovance agent before replacement to double check whether the part needs to be replaced.

Target	Type	Standard replacement interval	Remarks
Motor	Absolute encoder battery	Depends on the operating condition. See the operation instructions for the encoder battery for details.	The standard replacement cycle is for reference only. If any device/component works improperly before the replacement cycle expires, replace it immediately.
	Insulation resistance	Check the insulation resistance at least once per year.	Use an insulation resistance gauge (set to 500 VDC) to measure the insulation resistance. Measurement method: Measure the resistance between the PE (grounding) and any phase among U/V/W. The resistance measured should be higher than 10 MΩ.
Equip ment	Overall inspection	Perform overall inspection at least once every five years or every 20,000 hours, whichever comes first.	Perform maintenance based on the related maintenance guide of the equipment.

6 Maintenance

6.1 Routine Maintenance

6.1.1 Daily Checklist

Check the following items during routine inspection.

Table 6–1 Routine checklist

No.	Item	Checked
1	The ambient temperature and humidity are normal. There is no dust or unwanted objects in the servo drive.	☐
2	There is no abnormal vibration or noise.	☐
3	The voltage of the power supply is normal.	☐
4	There is no strange smell.	☐
5	There are no fibers adhered to the air vent.	☐
6	There is no intrusion of unwanted objects on the load end.	☐

6.1.2 Routine Cleaning List

Clear the following items listed in the table.

Table 6–2 Routine cleaning list

No.	Routine cleaning list	Checked
1	Clean the dust, especially the metallic dust on the surface of the equipment.	☐
2	Keep the front end of the servo drive and the connectors clean.	☐
3	The service life of the bearing may be reduced when the motor rotates forwardly/reversely continuously at an angle lower than 150°. Therefore, rotate the motor shaft for more than one revolution at least once a day.	☐

Note

- Cut off the power supply before cleaning. Clean the equipment with an air gun or a piece of dry cloth.
- Do not use the gasoline, diluent, alcohol, acidic or alkaline detergent during cleaning to prevent enclosure discoloration or damage.

6.2 Regular Checklist

Table 6–3 Regular checklist

No.	Item	Checked
1	The screws used to fix the couplings between devices are in place.	☐
2	There is no sign of overheating.	☐
3	Terminal blocks are in good condition without any sign of damage.	☐
4	The clamping units of terminal blocks are in place.	☐

7 Parts Replacement

7.1 Replacing the Cooling Fan

- Possible causes of damage: bearing wear or blade aging
- Criteria for determining the fan damage: cracks on the blade, unusual vibration noise upon start, and improper operation of fan blades
- Replacement of the fan: Press the snap-fit joint on the fan plastic cover and pull the fan outwards.

Removing the motor fan

1. Remove the cover of the junction box and the rear cover of the fan with a hexagon wrench.

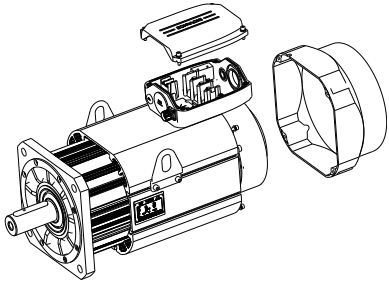

2. Remove the power crimping cables (white+black/blue), shielded cable (brown+white), and grounding cable (yellow-green) of the fan.

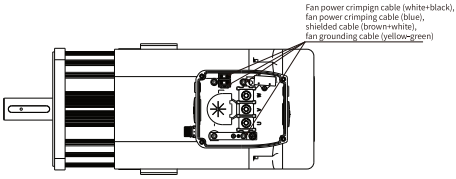

3. Remove the cover of the fan with a hexagon wrench.

4. Remove the fan with a hexagon wrench and pull the fan cable out through the cable outlet hole.

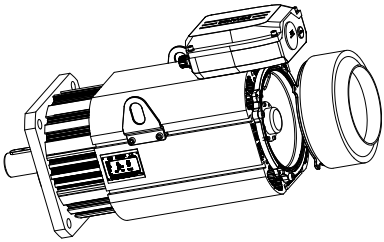

Installing the motor fan

Note

- Install the fan in the reverse order of removal and ensure the correct direction of the fan.
- The fan should rotate clockwise to blow air into the motor air duct when viewed from the rear cover of the fan.

1. Install the fan to the fan cover.

2. Pass the fan cable through the fan cable outlet hole of the junction box, and then install the fan cover to the rear end cover.

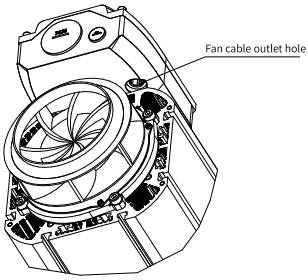

3. Lock the power crimping cables (white+black/blue) to the power terminals of the fan. Crimp the shielded cable (brown+white) and lock the shielded cable and the grounding cable (yellow-green) of the fan to the grounding plate.

4. Finally, lock the junction box cover and the rear cover of the fan.

Replacing the feet

M8 bolts, tightening torque not lower than 20 N · m

See the user guide for the distance between the front and rear feet.

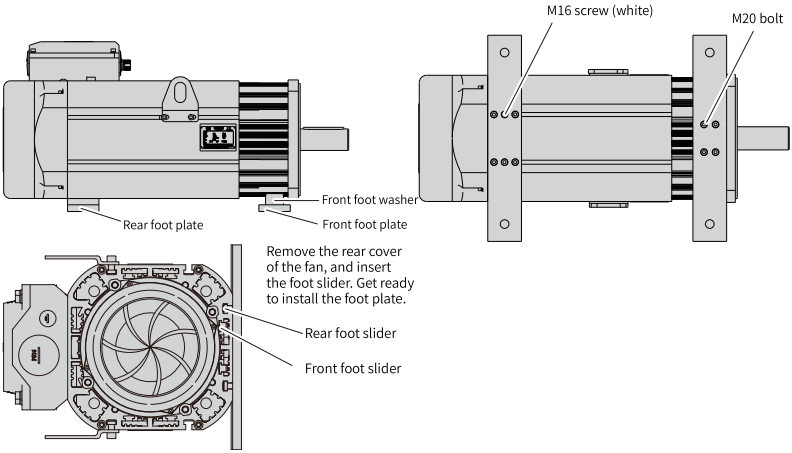

Accessory code	Specification	Specification of the feet
98060050	MEG20-**D-**CD-***** -K.	The width of the foot plate is 40 mm.
98060051	MEG23-**D-**CD-***** -K.	The width of the foot plate is 50 mm.
98060052	MEG20-**D-**CD-***** -W.	The width of the foot plate is 70 mm.
98060053	MEG23-**D-**CD-***** -W.	The width of the foot plate is 70 mm.

Cleaning the fan

The estimated lifetime of the fan is 40,000 hours (operating at full speed under rated voltage and ambient temperature of 40°C). During operation, dusts or similar can be attracted to the fan, affecting the cooling effect. Err45 will be reported when the temperature of the motor winding exceeds the overtemperature protection threshold.

1. Remove the four M6 bolts with equal height (GB/T 5281-85) on the rear part of the motor. These bolts are used to fix the rear cover of the fan.

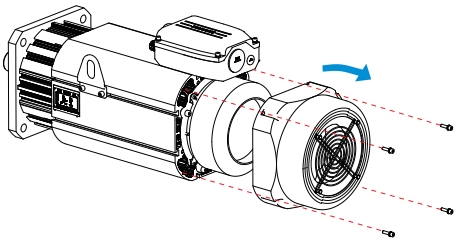

2. After taking off the rear cover of the fan, clean the unwanted objects on the surface of the fan with a small straight screwdriver

and use an air gun to blow the fan surface finally.

3. Install the rear cover of the fan in place after cleaning and fix the cover with original screws.

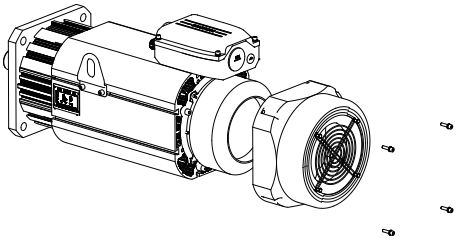

Note

In application sites where cotton fibers and objects with high absorptivity can be easily attracted to the drive, such as shoe machineries and textile machineries, clean the air filter at least once every 31 days.

For example, shoe machine, textile, etc..

7.2 Replacing the Flat Key

The motor flat key carries a hole for easy removal of the key. The specifications of the screw used for removing the flat key are shown below.

Motor Model	Flat Key Dimensions	Screw for Flat Key Removal	Property Class
MEG20	A - type flat key - 8 x 12 x 56 (mm)	M5 x 10 and above	8.8 and above
MEG23	A - type flat key - 9 x 14 x 90 (mm)	M5 x 10 and above	8.8 and above

Use an allen wrench to screw down the bolt into the disassembly hole of the flat key to push the flat key out.

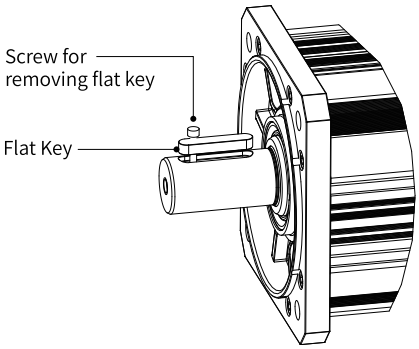

7.3 Replacing the Motor Oil Seal

1. When removing the oil seal, put a piece of cloth near the hole where the oil seal is pried out. This is to prevent the end cover from being scratched.
2. Secure the motor properly and hold the outer lip of the oil seal with either end of the needle-nose pliers. Then pry out either or both holes for removing the oil seal, as shown below.

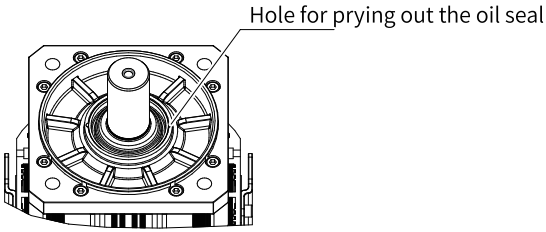

3. Pry out the oil seal slowly.
4. Use an oil seal press-fitting tool to press the new oil seal into place to safeguard the protection effect. Contact Inovance technical support to get details.

8 Hub Ring

REK nylon hub ring

Material: Nylon

Color: Black (RAL9005)

Storage temperature: -40°C to +100°C

IP rating: IP68 with O-ring

Dimensions

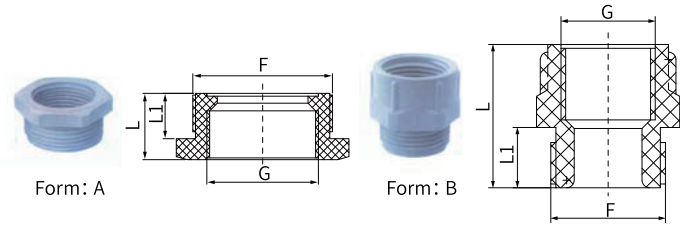

Figure 8-1 Description of dimensions (mm)

Table 8–1 REK-M Nylon reducer - Metric thread

Spare part code - Available	Hub ring information						Nylon connector information		Remarks
	Outer thread specifications	Inner thread specifications	Thread length (L1)	Total length (L)	Wrench dimensions (SW)	Form	Outer thread specifications	Outer diameter of the cable for inner hole (mm)	
98060056	M20 x 1.5	M16 x 1.5	9	13	24	A	M16 x 1.5	5 to 10	Hub ring+Nylon connector/set
98060058	M50 x 1.5	M32 x 1.5	14	22	55	A	M32 x 1.5	18 to 25	Hub ring+Nylon connector/set
98060057	M50 x 1.5	M40 x 1.5	14	22	55	A	M40 x 1.5	22 to 32	Hub ring+Nylon connector/set

Note

Contact Inovance if you need other models.

9 Standards Compliance

Certification	Standard
CE	EN 60034-1 (Safety) EN 60034-5 (Safety) EN 61800-3 (EMC)
UL/cUL	UL1004-1 UL1004-6 CSA C22.2 NO.100-14
UKCA	EN 60034-1:2010 EN 60034-5:2001+A1:2007 EN61800-3:2004+A1:2012

Table 9–1 CE certification

Directive	Standard
EMC Directive 2014/30/EU	EN 61800-3 EN 61800-6-2 EN 61800-6-4 EN 55011
Low Voltage Directive 2014/35/EU	EN 61800-5-1
	EN 60034-1 EN 60034-5
RoHS Directive 2011/65/EU and supplementary articles 2015/863/EU	2011/65/EU and supplementary articles 2015/863/EU

Copyright © Shenzhen Inovance Technology Co., Ltd.

19012511A06

Shenzhen Inovance Technology Co., Ltd.

www.inovance.com

Add.: Inovance Headquarters Tower, High-tech Industrial Park,
Guanlan Street, Longhua New District,
Shenzhen 518000, P.R. China
Tel: (0755) 2979 9595 Fax: (0755) 2961 9897

Suzhou Inovance Technology Co., Ltd.

www.inovance.com

Add.: No. 52, Tian E Dang Road, Wuzhong District, 215104,
Suzhou City, Jiangsu Province, P.R. China
Tel: (0512) 6637 6666 Fax: (0512) 6285 6720