INOVANCE

FORWARD, ALWAYS PROGRESSING



Second Generation of MX3 Series Spindle Motor

User Guide

Industrial Automation | Intelligent Elevator | New Energy Vehicle | Industrial Robot | Rail Transit

Data code PS00003465A02

Preface

Introduction

The second-generation MX3 series spindle motor is a direct drive motor for weaving machines. It has superior torque-volume ratio and torque-inertia ratio. When used together with Inovance TAJ/TWJ series control cabinet, it can form a spindle beating system featuring high efficiency, energy conservation, simple maintenance, and stepless speed regulation.

This user guide describes the basic information, installation, commissioning and operation of the motor.

More Documents

Name	Data Code
IWCA 200 Series Water Jet Loom Electronic Control System User Guide	19011543
TAJ200 Series Water Jet Loom Electronic Control System User Guide	19011262

Revision History

Date of Revision	Version	Revision
April 2023	A02	Added MX3-45C80B model.
March 2023	A01	Add two models: MX3-37C10C and MX3-45C10C.
January 2022	A00	First release

Document Acquisition

This guide is not delivered with the product. You can obtain the PDF version by visiting:

http://www.inovance.com.

Table of Contents

Preface 1
Safety Instructions 3
1 Product Information 9
1.1 Model and Nameplate 9
1.2 Components Description 9
1.3 Product Dimensions 11
1.4 Mechanical Characteristics 11
1.5 Electrical Specifications 12
1.6 Altitude-based Derating Characteristics 12
1.7 Optional Parts 13
1.8 System Configurations 15
2 Installation Instructions 16
2.1 Installation Precautions 16
2.2 Installation Flowchart 17
2.3 Preparations Before Installation 18
2.4 Installation Method 21
3 Commissioning and Operation 28
3.1 Safety Instructions 28
3.2 Inspection Before Commissioning 28
3.3 Commissioning Procedure 29
4 Maintenance 31
5 Disassembly Instructions 32

Safety Instructions

Safety Precautions

- This chapter presents essential safety instructions for a proper use of the equipment. Before operating the equipment, read through the user guide and comprehend all the safety instructions. Failure to comply with the safety instructions may result in death, severe personal injuries, or equipment damage.
- "CAUTION", "WARNING", and "DANGER" items in the user guide only indicate some of the precautions that need to be followed; they just supplement the safety precautions.
- Use this equipment according to the designated environment requirements. Damage caused by improper use is not covered by warranty.
- Inovance shall take no responsibility for any personal injuries or property damage caused by improper use.

Safety Levels and Definitions



Indicates that failure to comply with the notice will result in death or severe personal injuries.



Indicates that failure to comply with the notice may result in death or severe personal injuries.



Indicates that failure to comply with the notice may result in minor or moderate personal injuries or equipment damage.

Safety Instructions

- Drawings in the user guide are sometimes shown without covers or protective guards. Remember to install the covers or protective guards as specified first, and then perform operations in accordance with the instructions.
- The drawings in the user guide are shown for illustration only and may be different from the product you purchased.

Unpacking
 • Do not install the equipment if you find damage, rust, or signs of use on the equipment or accessories upon unpacking. • Do not install the equipment if you find water seepage or missing or damaged components upon unpacking. • Do not install the equipment if you find the packing list does not conform to the equipment you received.

CAUTION

- Check whether the packing is intact and whether there is damage, water seepage, dampness, and deformation before unpacking.
- Unpack the package by following the unpacking sequence. Do not strike the package violently.
- Check whether there is damage, rust, or injuries on the surface of the equipment and equipment accessories before unpacking.
- Check whether the package contents are consistent with the packing list before unpacking.

Storage and Transportation

WARNING

- Large-scale or heavy equipment must be transported by qualified professionals using specialized hoisting equipment. Failure to comply may result in personal injuries or equipment damage.
- Before hoisting the equipment, ensure the equipment components such as the front cover and terminal blocks are secured firmly with screws. Loosely-connected components may fall off and result in personal injuries or equipment damage.
- Never stand or stay below the equipment when the equipment is being hoisted by the hoisting equipment.
- When hoisting the equipment with a steel rope, ensure the equipment is hoisted at a constant speed without suffering from vibration or shock. Do not turn the equipment over or let the equipment stay hanging in the air. Failure to comply may result in personal injuries or equipment damage.

CAUTION

- Handle the equipment with care during transportation and mind your steps to prevent personal injuries or equipment damage.
- When carrying the equipment with bare hands, hold the equipment casing firmly with care to prevent parts from falling. Failure to comply may result in personal injuries.
- Store and transport the equipment based on the storage and transportation requirements. Failure to comply will result in equipment damage.
- Avoid storing or transporting the equipment in environments with water splash, rain, direct sunlight, strong electric field, strong magnetic field, and strong vibration.
- Avoid storing the product for more than 3 months. When the product needs to be stored for an extended period, take more strict protection and necessary inspection.
- Pack the equipment strictly before transportation. Use a sealed box for long-distance transportation.
- Never transport the equipment with other equipment or materials that may harm or have negative impacts on this equipment.

Installation

DANGER

- The equipment can be operated by well-trained and qualified professionals only. Non-professionals are not allowed to install the equipment.



- Read through the guide and safety instructions before installation.
- Do not install this equipment in places with strong electric or magnetic fields.
- Before installation, check that the mechanical strength of the installation site can bear the weight of the equipment. Failure to comply will result in mechanical hazards.
- Do not wear loose clothes or accessories during installation. Failure to comply may result in an electric shock.
- When installing the equipment in a closed environment (such as a cabinet or casing), use a cooling device (such as a fan or air conditioner) to cool the environment down to the required temperature. Failure to comply may result in equipment over-temperature or a fire.
- Do not retrofit the equipment.
- Do not fiddle with the bolts used to fix equipment components or the bolts marked in red.
- When the equipment is installed in a cabinet or final assembly, a fireproof enclosure providing both electrical and mechanical protections must be provided. The IP rating must meet IEC standards and local laws and regulations.
- Before installing devices with strong electromagnetic interference, such as a transformer, install a shielding device for the equipment to prevent malfunction.
- Install the equipment onto an incombustible object such as a metal. Keep the equipment away from combustible objects. Failure to comply will result in a fire.



- Cover the top of the equipment with a piece of cloth or paper during installation. This is to prevent unwanted objects such as metal chippings, oil, and water from falling into the equipment and causing faults. After installation, remove the cloth or paper on the top of the equipment to prevent over-temperature caused by poor ventilation due to blocked ventilation holes.
- Resonance may occur when the equipment operating at a constant speed executes variable speed operations. In this case, install the vibration-proof rubber under the motor frame or use vibration suppression function to reduce resonance.

Wiring



- Equipment installation, wiring, maintenance, inspection, or parts replacement must be performed only by professionals.
- Before wiring, cut off power connections with all equipment. After the power off, wait for at least the time designated on the equipment warning label before further operations because residual voltage still exists after power-off. After waiting for the designated time, measure the DC voltage in the main circuit to ensure the DC voltage is within the safe voltage range. Failure to comply will result in an electric shock.
- Do not perform wiring, remove the equipment cover, or touch the circuit board with power ON. Failure to comply will result in an electric shock.
- Check that the equipment is grounded properly. Failure to comply will result in an electric shock.

WARNING

- Do not connect the input power supply to the output end of the equipment. Failure to comply will result in equipment damage or even a fire.
- When connecting a drive to the motor, check that the phase sequences of the drive and motor terminals are consistent to prevent reverse motor rotation.
- Cables used for wiring must meet cross sectional area and shielding requirements. The shield of the cable must be reliably grounded at one end.
- Fix the terminal screws with the tightening torque specified in the user guide. Improper tightening torque may overheat or damage the connecting part, resulting in a fire.
- After wiring is done, check that all cables are connected properly and no screws, washers or exposed cables are left inside the equipment. Failure to comply may result in an electric shock or equipment damage.

CAUTION

- During wiring, follow the proper electrostatic discharge (ESD) procedure, and wear an antistatic wrist strap. Failure to comply will damage the equipment or the internal circuits of the equipment.
- Use shielded twisted pairs for the control circuit. Connect the shield to the grounding terminal of the equipment for grounding purpose. Failure to comply will result in equipment malfunction.

Power-on

DANGER

- Before power-on, check that the equipment is installed properly with reliable wiring and the motor can be restarted.
- Check that the power supply meets equipment requirements before power-on to prevent equipment damage or a fire.
- After power-on, do not open the cabinet door or protective cover of the equipment, touch any terminal, or disassemble any unit or component of the equipment. Failure to comply will result in an electric shock.

WARNING

- Perform a trial run after wiring and parameter setting to ensure the equipment operates safely. Failure to comply may result in personal injuries or equipment damage.
- Before power-on, make sure that the rated voltage of the equipment is consistent with that of the power supply. Failure to comply may resulting in a fire. Failure to comply may result in a fire.
- Before power-on, check that no one is near the equipment, motor, or machine. Failure to comply may result in death or personal injuries.

Operation

DANGER

- The equipment must be operated only by professionals. Failure to comply will result in death or personal injuries.
- Do not touch any connecting terminals or disassemble any unit or component of the equipment during operation. Failure to comply will result in an electric shock.



- Do not touch the equipment casing, fan, or resistor with bare hands to feel the temperature. Failure to comply may result in personal injuries.
- Prevent metal or other objects from falling into the equipment during operation. Failure to comply may result in a fire or equipment damage.

Maintenance



- Equipment installation, wiring, maintenance, inspection, or parts replacement must be performed only by professionals.
- Do not maintain the equipment with power ON. Failure to comply will result in an electric shock.
- Before maintenance, cut off all the power supplies of the equipment and wait for at least the time designated on the equipment warning label.
- In case of a permanent magnet motor, do not touch the motor terminals immediately after power-off because the motor terminals will generate induced voltage during rotation even after the equipment power supply is off. Failure to comply will result in an electric shock.



- Perform routine and periodic inspection and maintenance on the equipment according to maintenance requirements and keep a maintenance record.

Repair



- Equipment installation, wiring, maintenance, inspection, or parts replacement must be performed only by professionals.
- Do not repair the equipment with power ON. Failure to comply will result in an electric shock.
- Before inspection and repair, cut off all the power supplies of the equipment and wait for at least the time designated on the equipment warning label.



- Require repair services according to the product warranty agreement.
- When the fuse is blown or the circuit breaker or earth leakage current breaker (ELCB) trips, wait for at least the time designated on the equipment warning label before power-on or further operations. Failure to comply may result in death, personal injuries, or equipment damage.
- When the equipment is faulty or damaged, the troubleshooting and repair work must be performed by professionals that follow the repair instructions, with repair records kept properly.
- Replace quick-wear parts of the equipment according to the replacement instructions.
- Do not use damaged equipment. Failure to comply may result in death, personal injuries, or severe equipment damage.
- After the equipment is replaced, check the wiring and set parameters again.

Disposal
 • Dispose of retired equipment in accordance with local regulations and standards. Failure to comply may result in property damage, personal injuries, or even death. • Recycle retired equipment by observing industry waste disposal standards to avoid environmental pollution.

1 Product Information

1.1 Model and Nameplate

MX3 - 50C 70B
① ② ③

① **Product type** MX3: Second generation of spindle motor	② **Rated power (W)** (Comprised of two digits and a letter) A: x 1 B: x 10 C: x 100 D: x 1000 E: x 10000 Example: 50C: 5000 W	③ **Rated Speed (rpm)** (Comprised of two digits and a letter) A: x 1 B: x 10 C: x 100 D: x 1000 E: x 10000 Example: 70B: 700 rpm

Figure 1-1 Description of the model number

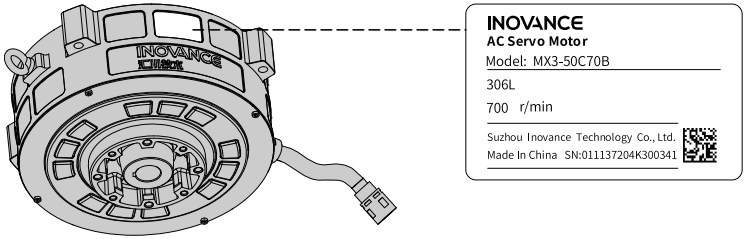

Figure 1-2 Description of nameplate

1.2 Components Description

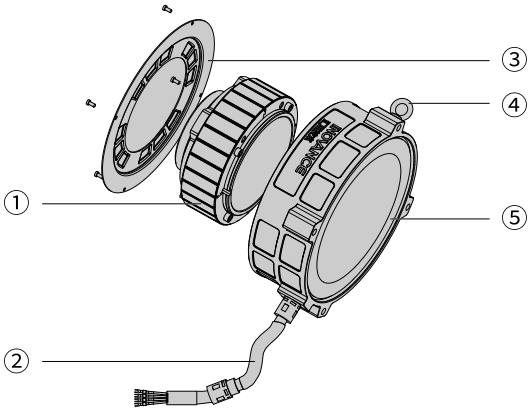

Figure 1-3 Components of motor

No.	Name	Remarks
①	Rotor	The stator and rotor are assembled and supplied together and can be installed directly without separation.
②	Power cable	The motor end connecting cable is lead to U/V/W terminals at the drive side , and to the PE grounding terminals. Refer to *"Table 1–1 " on page 10* for description of power cable.
③	Rear cover	Used for motor protection
④	Eye bolt	Used to connect lift fitting equipment
⑤	Stator	The stator and rotor are assembled and supplied together and can be installed directly without separation.

Table 1–1 Description of power cables

Terminal	Color	Screw	Lug Specifications
U	Blue	M4	2-4S
V	Black	M4	2-4S
W	Red	M4	2-4S
PE	Yellow/Green	M4	2-4S



When the motor power cable is connected to the driver, make sure that the three-phase cables are matched. Otherwise, the motor will be damaged.

1.3 Product Dimensions

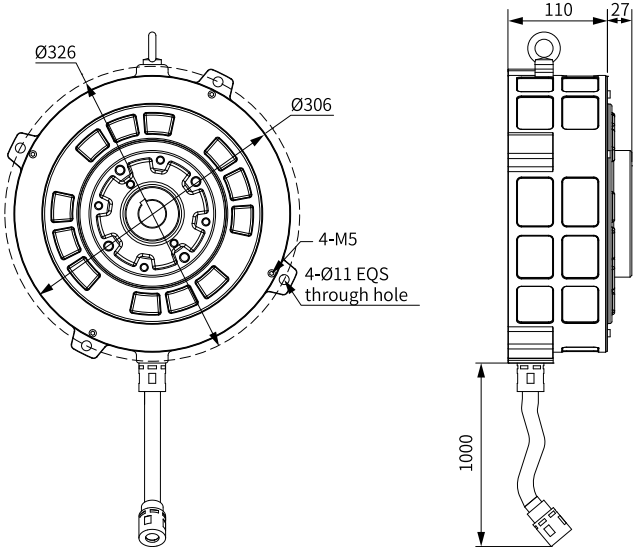

Figure 1-4 Product dimensions (mm)

Table 1–2 Motor weight

Model	Weight (kg)
MX3-50C70B	31.5
MX3-37C10C	24
MX3-45C10C	26
MX3-50C10C	31.5
MX3-45C80B	28

1.4 Mechanical Characteristics

Item	Description
Duty type	S1
Excitation mode	Permanent magnet excitation
Energy efficiency rating	Level 1, IE5
Installation mode	Flange
Ambient temperature for storage	-40°C to +60°C
Operation ambient temperature	0 to 40°C

Item	Description
Ambient humidity for storage	Less than 95%RH, without condensing
Ambient humidity for operation	Less than 95%RH, without condensing
Vibration strength	49m/s^2
Insulation resistance	500V DC, 1s, insulation resistance ⩾50MΩ
Insulation voltage	2160V AC, 1s
Protection for stator core	High strength pouring sealant is used for sealing protection, which features high IP rating, high thermal conductivity and high resistance to vibration, corrosion and heat. It guarantees the long-term stable operation of the spindle of the motor under complex and demanding environments
Direction of rotation	With all cables connected correctly, the motor rotates anti-clockwise viewed from the load side (CCW) .

1.5 Electrical Specifications

Model	Rated power (kW)	Rated speed (rpm)
MX3-50C70B	5.0	700
MX3-37C10C	3.7	1000
MX3-45C10C	4.5	1000
MX3-50C10C	5.0	1000
MX3-45C80B	4.5	800

1.6 Altitude-based Derating Characteristics

The rated altitude of the motor is below 1000m. Derating is required if the altitude is above 1000m.

Altitude	1000m	2000m	3000m	4000m	5000m
Percentage of derating of rated value	100%	94.7%	88.7%	82.4%	64.5%

1.7 Optional Parts

Adapter Flange

Table 1–3 Adapter flange selection

Model	Dimension at axial direction (mm)	Inner hole dimensions (mm)	Applicable model	Accessory
MX3-F14435	35	144	Water jet loom: 8100 Air jet loom: 9100	-
MX3-F14335	35	143	Water jet loom: 8100 Air jet loom: 9100	-
MX3-F14445	45	144	Water jet loom: 408	-
MX3-F14445-125	45	144 to125	Water jet loom: 851	Requires a 125mm transition ring and a 28mm bottom corner spacer.
MX3-F14445-28	45	144	Water jet loom: 851	Requires a 28mm bottom corner spacer.

Note

- The adapter flange needs to be adapted to the actual loom bearing shell and wall plate. For the first use, please contact the technical engineer of Inovance.
- The adapter flange of standard scheme has no lint-proof function. It is recommended to use lint-proof adapter flange for air jet looms. For details, consult the technical engineer of Inovance.

Air Jet Spacer

The air jet loom requires additional air jet spacer whose model is MX3-D7.

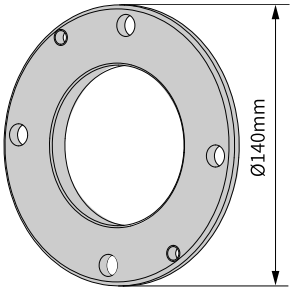

Figure 1-5 Air jet spacer appearance

Note

When using the air jet spacer for the first time, contact the technical engineer of Inovance for support.

Inertia Disk

To reduce the influence of the textile machine on the stability of the motor, the motor can be equipped with an inertia disc (model MX3-G0618).

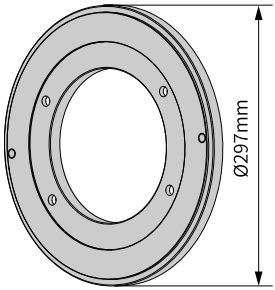

Figure 1-6 Inertia disk appearance

Note

When using the inertia disc for the first time, contact the technical engineer of Inovance for support.

Auxiliary Tool

During installation, to ensure the consistency of the shaft misalignment between the adapter flange and the tapered part of the loom crankshaft, and to avoid the air gap not meeting the requirements because of poor shaft misalignment, it is recommended to use the auxiliary tool to install the adapter flange.

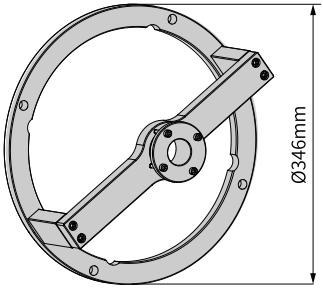

Figure 1-7 Auxiliary tool appearance

1.8 System Configurations

System	Configuration
Air jet loom electronic control system	MX3 second generation spindle motor + TAJ300-Q7
Water jet loom electronic control system	MX3 Second Generation Spindle Motor + TWJ300-A8
	MX3 second generation spindle motor + TWJ300-A6
	MX3 Second Generation Spindle Motor + TWJ300-A5
Super-start AC drive system	MX3 Second Generation Spindle Motor + ITD500E

2 Installation Instructions

2.1 Installation Precautions



- Because the motor has strong magnetism, there is a strong magnetic field and a large magnetic attraction around the motor. Personnels with pacemakers or metal implants are not allowed to work on the motor, and a warning is marked on the loom.
- The installation of the motor and other operations can only be carried out by qualified professionals who meet corresponding professional requirements.
- Do not use damaged cables, and do not touch the exposed parts of the cables.



- Clocks and magnetizable memories (such as disks, credit cards, etc.) should be kept away from the motor, otherwise they will get damaged.
- Avoid mechanical collision and do not knock on the motor shaft. Otherwise, motor performance will deteriorate.
- Always use spare parts approved by the manufacturer.
- Prevent foreign objects from entering the motor. Failure to comply may cause motor running failures or damages.
- The lifting equipment must meet the load capacity requirement and other related regulations.
- Do not connect the motor directly to industrial power, otherwise motor damage will happen.

2.2 Installation Flowchart

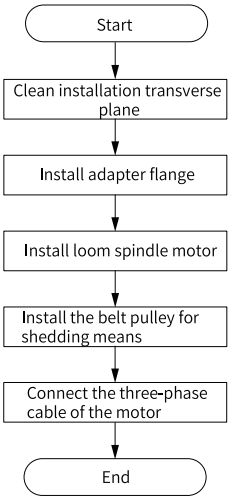

Figure 2-1 Installation procedure of the motor

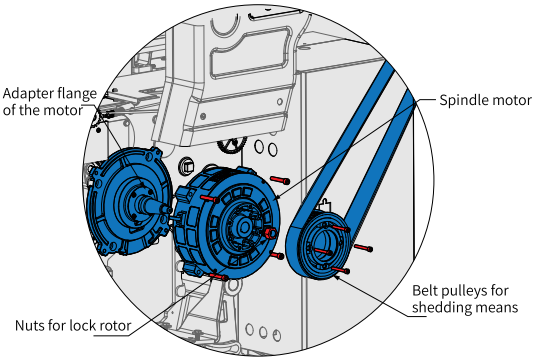

Figure 2-2 Main components of the motor

Note

- Whether to install the belt pulley for shedding means depends on the actual working conditions and needs of textile mills. If you do not need to use this belt pulley, there is no need for you to install it. The operation of the equipment will not be affected.
- The motor adapter flange can be made by the equipment factory, but it must be jointly designed with the technical engineer of Inovance.

2.3 Preparations Before Installation

Installation Environment

Item	Requirement
Altitude	The maximum altitude is 5000m. Derating is required if the altitude is above 1000 m (without derating below 1000 m) . Refer to *"1.6 Altitude-based Derating Characteristics" on page 12* for more details.
Operating Ambient Temperature	0°C to 40°C Temperature change less than 0.5°C/min. Derating is required if the temperature is above 40°C.
Ambient temperature for storage	-40°C to +60°C
Ambient humidity for storage	Less than 95%RH, without condensing
Ambient humidity for operation	Less than 95%RH, without condensing
Protection for stator core	High strength pouring sealant is used for sealing protection, which features high IP rating, high thermal conductivity and high resistance to vibration, corrosion and heat. It guarantees the long-term stable operation of the spindle of the motor under complex and demanding environments.
Vibration strength	Below 49m/s^2
Installation location	• Install the motor in a place free from direct sunlight. • Install the drive in a place free from corrosive and inflammable gases and combustible materials, such as the hydrogen sulfide, chlorine, ammonia, sulphur gas, chloridize gas, acid, soda and salt. • Use the motor with oil seal in places with grinding fluid, oil mist, iron powders or cuttings. • Install the motor away from heating sources such as a heating stove. • Install the motor away from explosion danger. • Do not run the motor in an enclosed environment. It will lead to high temperature of the motor, which will shorten its service life.

Installation Tools

Protective Equipment or Tool Name	Quantity	Specification Remarks
Anti-hit safety shoes	1 pair/person	For safety
Gloves	1 pair/person	-
Safety helmet	1 helmet/person	For safety

Protective Equipment or Tool Name	Quantity	Specification Remarks
Lift fitting equipment	1 piece	Lifting weight: 30 to 40kg
Inner hexagon wrench	1 set	To fix M5 to M12 screws
Shedding adjustable wrench	1	To fix M20 screws
Dial gauge	1 piece	To check the installation accuracy of adapter flange and crankshaft
Torque wrench	1 set	To measure the tightening torque of screws, nuts and other fasteners
Loctite 222 threadlocker or other brands with the same performance	1 bottle	Used for fastening the connecting area between the bolt and nut
Feeler gauge	1	To check whether the minimum air gap of rotor and stator meets requirements after the motor installation
Caliper	1	Used to check whether the transverse planes of rotor and stator dislocate
Auxiliary tool	1 set	To install adapter flange

Preparations for Mounting Screws

- **Recommended Model**

Table 2–1 Recommended fastening screws

Screw model	Length (mm)	Quantity	Remarks
M10	20	4	Inertia disk locking screw
	65	4	Enclosure mounting screw
M12	45	4	Adapter flange screws (model 8100, model 9100)
	55	4	Adapter flange screws (model 408)
	45	3	Adapter flange screws (model 851+28mm motor laminations)
	80	1	

Note

The screws in the table above is recommended. The actual length of screws depends on the actual situation of the equipment.

- **Recommended Tightening Torque**
  The recommended tightening torque of screw fasteners is shown as the following table, which is applicable to motor installation and the connection between the motor and the flange.

Table 2–2 Recommended tightening torque

Nominal thread diameter	Strength level								
	12.9			10.9			8.8		
	Yielding load	Initial tightening force	Tightening torque	Yielding load	Initial tightening force	Tightening Torque	Yielding load	Initial tightening force	Tightening Torque
	kgf	kgf	kgf·cm	kgf	kgf	kgf·cm	kgf	kgf	kgf·cm
M3×0.5	563	394	17	482	338	15	328	230	10
M4×0.7	983	688	40	842	589	34	573	401	23
M5×0.8	1590	1113	81	1362	953	69	927	649	47
M6×1	2251	1576	138	1928	1349	118	1313	919	80
M8×1.25	4099	2869	334	3510	2457	286	2390	1673	195
M10×1.5	6496	4547	663	5562	3894	567	3787	2651	386
M12×1.75	9442	6609	1160	8084	5659	990	5505	3853	674
M14×2	12880	9016	1840	11029	7720	1580	7510	5257	1070
M16×2	17584	12039	2870	15056	10539	2460	10252	7176	1670
M18×2.5	21504	15053	3950	18413	12889	3380	12922	9045	2370
M20×2.5	27440	19208	5600	23496	16447	4790	16489	11542	3360
M22×2.5	33936	23755	7620	29058	20340	6520	20392	14274	4580
M24×3	39536	27675	9680	33853	23697	8290	23757	16630	5820

- **Reference dimensions of countersunk head holes and bolt holes of hexagon bolts**

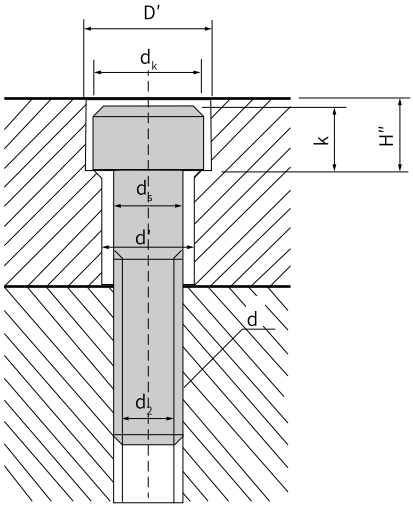

Figure 2-3 Dimensions of countersunk head holes and bolt holes of hexagon bolt

Table 2–3 Recommended tightening torque

Nominal threaded diameter (d)	M3	M4	M5	M6	M8	M10	M12	M14	M16	M18	M20	M22	M24	M27	M30
d_s	3	4	5	6	8	10	12	14	16	18	20	22	24	27	30
d'	3.4	4.5	5.5	6.6	9	11	14	16	18	20	22	24	26	30	33
d_k	5.5	7	8.5	10	13	16	18	21	24	27	30	33	36	40	45
D'	6.5	8	9.5	11	14	17.5	20	23	26	29	32	35	39	43	48
k	3	4	5	6	8	10	12	14	16	18	20	22	24	27	30
H”	3.3	4.4	5.4	6.5	8.6	10.8	13	15.2	17.5	19.5	21.5	23.5	25.5	29	32
d_2	2.6	3.4	4.3	5.1	6.9	8.6	10.4	12.2	14.2	15.7	17.7	19.7	21.2	24.2	26.7

2.4 Installation Method

1. Clean the mounting surface: mounting surface of loom, taper of loom crankshaft, mounting surface of adapter flange, mounting surface of motor housing, mounting surface of motor shaft.
2. Install adapter flange.
   a. Install the adapter flange on the bearing chamber of the loom, fasten the 4 screws of the adapter flange, and apply an appropriate amount of thread glue on it.

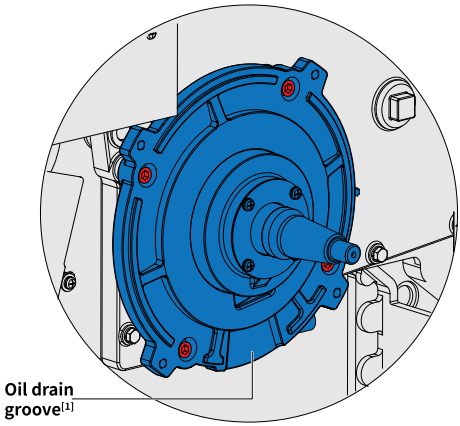

Figure 2-4 Installing the adapter flange face

Caution

- The adapter flange is designed with an oil drain groove. So oil leakage in the crankshaft bearing seat of the loom can be detected in time, avoiding the accumulation of lubricating oil at the motor end. If you want to make your own adapter flange, you must design an oil drain groove. Ensure the oil drain groove is installed vertically downward.
- The length of adapter flange lock screws can be selected according to the actual conditions of the loom. Refer to *"Table 2–1 " on page 19* for model selection of screws.
- For the taper tolerance design of the taper part of the loom crankshaft, it is recommended to refer to tolerance class AT6 specified in China National Standard GB 11334-2005. Otherwise, the operation of the loom will be affected.

b. Use dial gauge to check the installation accuracy of adapter flange.
With the A surface as the set-up base, adjust the dial gauge, place the pointer at the end of the adapter flange and rotate the crankshaft of the loom for one turn. The runout value at the end of the adapter flange is required to be less than 0.08mm.

With the B surface as the set-up base, adjust the dial gauge, place the pointer on the loom crankshaft (pay attention to avoiding the woodruff key), and rotate the loom crankshaft once, and the runout value of the loom crankshaft is required to be less than 0.04mm.

If the above requirements are not met, fine-tuning needs to be performed again according to the above steps. Otherwise, it may cause stator scrapping rotor and motor failure.

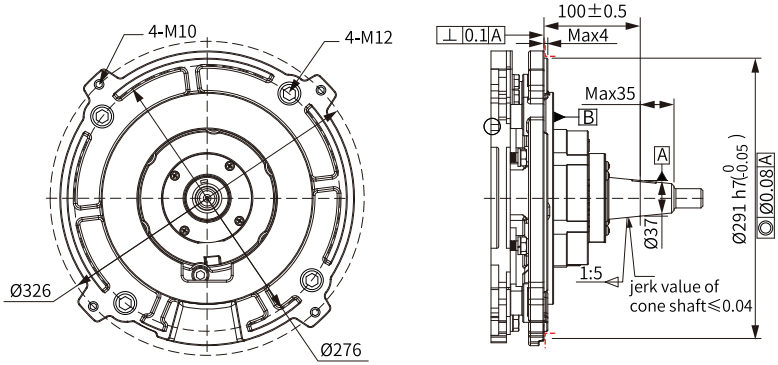

Figure 2-5 Installation accuracy of adapter flange (mm)

Caution

In order to ensure the installation accuracy, the red dotted part of the adapter flange installation diagram needs to be protected and is not allowed to be painted.

Note

For the installation method of the adapter flange of the anti-cotton solution, please consult the technical engineer of Inovance.

3. Install spindle motor.
   a. Install the 7×28mm (Japanese standard) woodruff key of the loom crankshaft taper (the 8mm woodruff key needs to be adapted).
   b. Alignment key: Use hoisting equipment to slowly sleeve the motor shaft into the main shaft of the loom, and align the keyway of the motor with the woodruff key of the loom crankshaft taper.

Caution

- During the installation process, do not stress the waterproof connector on the outlet end of the motor.
- The terminal of the motor lead wire should be directed towards the loom control cabinet/driver.

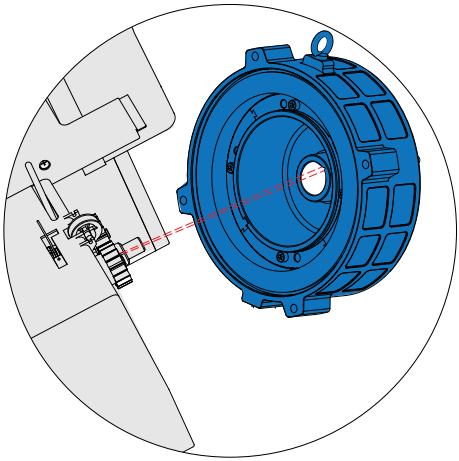

Figure 2-6 Alignment of keyway

c. According to the recommended tightening torque in *"Table 2–2 " on page 20*, tighten the four M10×65 hexagon bolts as shown in the following figure ①, and lock the stator assembly of the motor.
Use a M20 nut flat washer and a spring washer as shown in the following figure ② to fix the motor rotor and the main shaft of the loom.

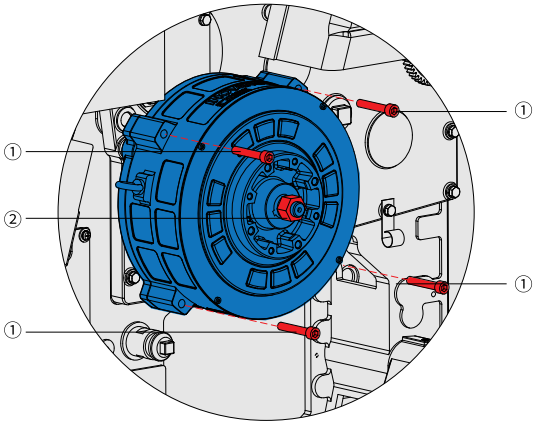

Figure 2-7 Position diagram of the lock nut

Note

- During the installation of the spindle motor, the recommended tensile strength for screws is Grade 8.8.
- To install M20 nuts and fix screws on the spindle motor, thread glue must be added.
- After installing the nuts, it is recommended to use a wrench with a torque of 215N·m (Grade 8 nut) for confirmation.
- It is necessary to apply an appropriate amount of Loctite 222 thread glue (or thread glue of the same performance) to the threads of the locking bolt and the locking nut to prevent loosening.
- The colors of ①lock bolts and ②lock nuts in the above figure are for illustration only.

d. Adjust the air gap between the stator and rotor of the motor. The air gap between the stator and rotor is required to be more that 0.3mm.
Insert a 0.3mm feeler gauge into the stator-rotor gap, and the feeler gauge can make a complete rotation. Otherwise, adjustment with a sheet is required.

Adjustment method: Compare the motor to the clock. If the air gap at 12 o'clock does not meet the requirements, insert a sheet at the junction of the motor housing and the adapter flange at 6 o'clock to adjust the air gap until the feeler gauge can completely pass through the gap between the stator and rotor. After adjustment, tighten the screws and apply thread glue on them.

e. Post-installation check of the motor

- Check whether each lock screw is locked according to the requirements. Refer to *"Table 2–2 " on page 20* for the locking requirements.
- Use a caliper to detect the end face dislocation value of the stator and rotor iron core. If the dislocation value of the stator and rotor is more than 3mm, check whether the adapter flange model matches the motor.
- After the installation is complete, rotate the rotor manually if the power is not turned on, and ensure that there is no obvious jam during the rotation. If yes, a foreign object may be stuck inside, or the flange assembly accuracy does not meet the requirements. In this case, reinstall the motor by following the preceding steps. Refer to *" Removal Guide" on page 32* for removal procedure.

f. Use 4 M5×10 hexagon bolts to fasten the motor rear cover, the screws need to be coated with thread glue.

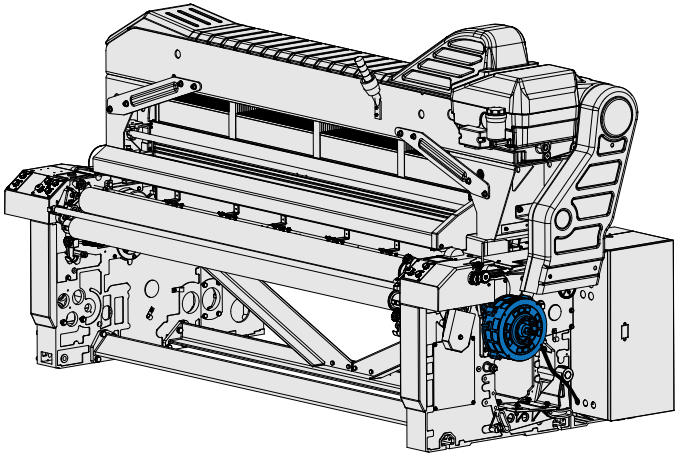

Figure 2-8 Installation of the motor and the adapter flange face

4. Install the belt pulley for the shedding means.

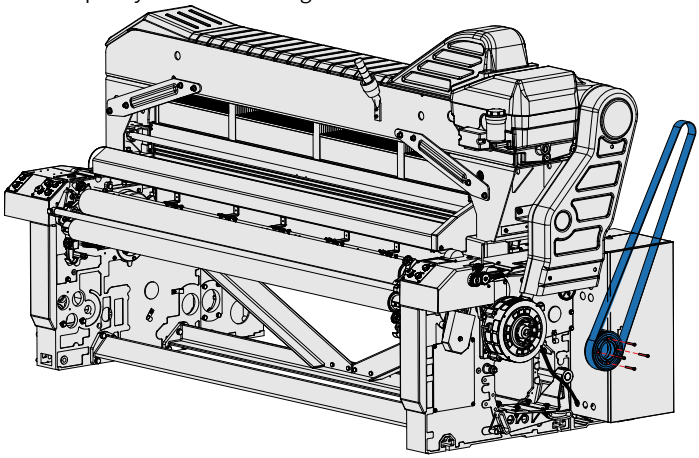

Figure 2-9 Installation of the belt pulley for shedding means

After the installation, the system is shown as the following figure:

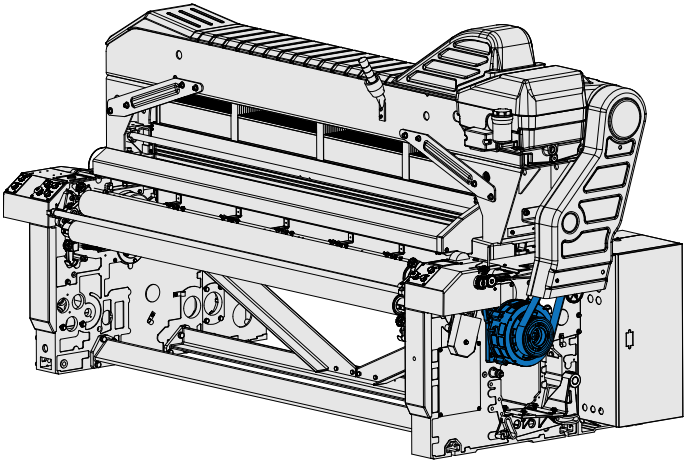

Figure 2-10 Diagram of the system

5. Connect the motor three-phase cables to the drive side.
   When the motor power cable is connected to terminals at the drive side, make sure that the three-phase cables are matched, otherwise the motor will be damaged.
   Refer to *"Table 1–1 " on page 10* for pin description of power cable.

Caution

- Ensure the motor ground cable is fully grounded.
- The motor features a bearingless design. Do not use the driver to drive the motor until the motor is installed on the equipment.

3 Commissioning and Operation

3.1 Safety Instructions

Danger

- Because the motor has strong magnetism, there is a strong magnetic field and a large magnetic attraction around the motor. Personnels fitted with pacemakers or metal implants are not allowed to work on the motor, and a warning is marked on the equipment.
- The commissioning of the motor can only be carried out by qualified professionals.
- Do not use damaged cables, and do not touch the exposed parts of the cables.
- When the motor is running, its surface temperature is high. Do not touch the surface of the motor to avoid burns.

Caution

- When the motor power cable is connected to the driver, make sure that the three-phase cables are matched, otherwise the motor will be damaged.
- Ensure the motor ground cable is fully grounded.
- Control the motor speed within the maximum speed range.

3.2 Inspection Before Commissioning

- Check whether the servo drive model matches the spindle motor.
- Check that the motor wiring and servo drive wiring are correct before running.
- Check the control signal and ensure all wiring follows related specifications.
- Check the motor parameters on the nameplate before running.

Para. No.	Meaning	Description
F1.01	Rated motor power	Indicates the rated motor power displayed on the motor nameplate.
F1.02	Rated motor voltage	Indicates the rated motor voltage displayed on the motor nameplate.
F1.03	Rated motor current	Indicates the rated motor current displayed on the motor nameplate.

Para. No.	Meaning	Description
F1.04	Rated motor frequency	Indicates the rated motor frequency displayed on the motor nameplate.
F1.05	Rated motor speed	Indicates the rated motor speed displayed on the motor nameplate.

Note

When using ITD500E series loom spindle drive with MX3 series loom spindle motor, there is no need to set this group of parameters. You need to check whether the parameters displayed on the driver are consistent with the parameters on the nameplate of the motor.

3.3 Commissioning Procedure

The following are commissioning steps for ITD500E series special drive for loom spindle.

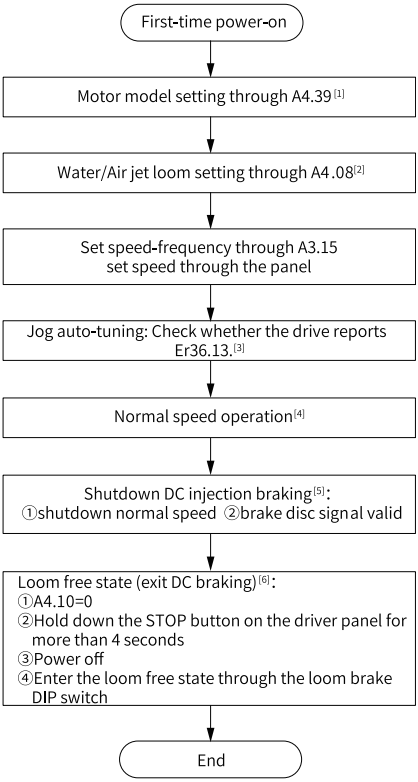

Figure 3-1 Quick commissioning flowchart

- [1] 5.0kW 700 motor: set A4.39 to 3; 5.0kW 1000rpm motor: set A4.39 to 4.
- [2] Air jet loom: set A4.08 to 3; water jet loom: set A4.08 to 5.
- [3] Jog auto-tuning: Check whether the drive reports Er36.13. If Er36.13 is reported, refer to ITD500E Series AC Drive for Textile Industry User Guide for common fault diagnosis and corresponding solutions.
- [4] Normal speed operation: Pay attention to the starting performance. Check whether the loom speed ripple is reasonable, and whether there is a gear on the cloth surface. Observe whether the loom passes the circle when parking; Jog at any angle to observe whether the car slips.
- [5] When ITD500E series external-type loom spindle driver is equipped with a non-Inovance electronic control system, the driver can stop and enter DC braking through the brake disc signal of the control cabinet. The driver can also stop and enter DC braking through the stop button on the driver panel.
- [6] Loom free state (exit DC braking): ①Set A4.10 to 0; ②Hold down the STOP button on the driver panel for more than 4 seconds; ③Power off; ④Enter the loom free state through the loom brake DIP switch.

4 Maintenance

Item	Frequency
For air jet loom, the lint inside and outside of the motor must be cleared.	Once every 30 days (the cleaning frequency can be increased according to the actual situation.)
Check the tightness of the screws and nuts of the spindle motor and the adapter flange.	Once every 30 days



For air jet loom, if the lint is not cleaned in time, it may cause a fire.

5 Disassembly Instructions

Danger

- Because the motor has strong magnetism, there is a strong magnetic field and a large magnetic attraction around the motor. Personnels fitted with pacemakers or metal implants are not allowed to work on the motor, and a warning is marked on the loom.
- The disassembly of the motor can only be carried out by qualified professionals who meet corresponding professional requirements.
- Do not touch the exposed part of the cable.

Caution

- Clocks and magnetizable memories (such as disks, credit cards, etc.) should be kept away from the motor, otherwise they may get damaged.
- Avoid mechanical collision and do not knock on the motor shaft. Otherwise, motor performance may deteriorate.
- The lifting equipment must meet the load capacity requirement and other related regulations.

Flow Chart of Removal Process

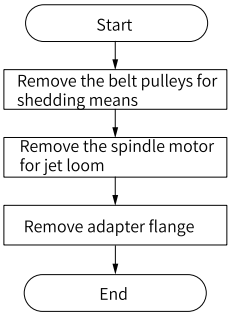

Figure 5-1 Flow chart of motor removal process

Removal Tools

Protective Equipment / Tool Name	Quantity	Specification remarks
Anti-hit safety shoes	1 pair/person	For safety
Gloves	1 pair/person	-
Safety helmet	1 helmet/person	For safety
Lift fitting equipment	1 piece	Lifting weight: 30 to 40kg
Inner hexagon wrench	1 set	Used to remove M5 to M12 screws
Shedding adjustable wrench	1	Used to remove M20 nuts
Auxiliary disassembly tool	1	To remove the motor

Removal methods

1. Remove the belt pulley for shedding means.
2. Remove the spindle motor for jet loom.
   a. Use a lifting machine to uplift the motor through the eye bolt in case that the motor may drop down after bolts and nuts are removed.
   b. Remove the M20 nuts which are used to fix the loom shaft and motor shaft.
   c. Remove the 4 M10×65 screws between the housing and adapter flange.
   d. Push the top of the auxiliary disassembly tool on the transverse plane of the loom crankshaft. Then fix the screws at both ends on the rotating shaft, and rotate the auxiliary tool top to separate the motor shaft from the loom crankshaft. The rotor assembly will be adsorbed on the stator assembly. Continue to rotate the top, so the stator assembly housing lip is separated from the adapter flange lip. Use a lifting machine to bring down the motor.
3. Remove the 4 tightening screws on the adapter flange and take down the adapter flange.



During the uninstallation process, handle with care to avoid damage to the loom shaft or motor.

Copyright © Shenzhen Inovance Technology Co., Ltd.

PS00003465A02

Shenzhen Inovance Technology Co., Ltd.

www.inovance.com

Add.: Inovance Headquarters Tower, High-tech Industrial Park, Guanlan Street, Longhua New District, Shenzhen
Tel: (0755) 2979 9595 Fax: (0755) 2961 9897

Suzhou Inovance Technology Co., Ltd.

www.inovance.com

Add.: No. 16 Youxiang Road, Yuexi Town, Wuzhong District, Suzhou 215104, P.R. China
Tel: (0512) 6637 6666 Fax: (0512) 6285 6720