INOVANCE

Advancing industrial technology,
for a better world

MD200 Series Basic AC Drive

User Guide

Industrial Automation

Intelligent Elevator

New Energy Vehicle

Industrial Robot

Rail Transit

Data code 19012113C06

Legal Information

Copyright

Copyright © 2015 Shenzhen Inovance Technology Co., Ltd. All rights reserved

This documentation is the exclusive property of Shenzhen Inovance Technology Co., Ltd. No individual or entity may excerpt, reproduce, modify, translate, or distribute any content herein without written consent from Inovance.

Legal action will be taken against infringement.

Trademarks

INOVANCE is a registered trademark of Shenzhen Inovance Technology Co., Ltd. and its affiliates. All other trademarks or registered trademarks mentioned in this documentation are the property of their respective owners. Unauthorized use of these trademarks by third parties for any purpose without written authorization could violate the rights of their owners.

Disclaimer of Liability

Due to continuous updates and improvements of products and technologies, the content of this documentation may not fully match the actual products. In the event of any discrepancies, the actual products shall prevail.

The contents are subject to change without notice due to product upgrade.

Waste Disposal

The storage, use, and disposal of this product (including optional accessories) must comply with local laws and regulations.

Qualified Personnel

The product/system described in this documentation may be operated only by personnel qualified for the specific task in accordance with the relevant documentation, in particular its warning notices and safety instructions. Qualified personnel can identify the risks of the product/system and prevent possible dangers.

Proper Use of the Product

Proper transportation, storage, assembly, installation, commissioning, operation, and maintenance are required to ensure the safe operation of the product without any problems. The required ambient conditions must be met. All operations must follow the guidelines provided in this documentation.

Preface

About This Guide

The MD200 series AC drive is a basic AC drive designed to control and regulate the speed and torque of three-phase AC asynchronous motors. It can be used to drive automated production equipment in various industries, such as textile, paper making, wire drawing, machine tool, packaging, food, fan, and water pump.

This guide describes the installation, wiring, troubleshooting, dimensions, functions, communication, and parameters of the MD200.

Standard Compliance

The following table lists the certifications and standards that the product may comply with. For details about the acquired certificates, see the certification marks on the product nameplate.

Certification	Directive		Standard
CE certification	EMC	2014/30/EU	EN 61800-3
	LVD	2014/35/EU	EN 61800-5-1
	RoHS directive	2011/65/EU	EN 50581
UL/cUL certification	-		UL61800-5-1
			C22.2 No.274-17
KCC certification	Korea radio law		KN 11

Revision History

Revision date	Document version	Software version	Description
November 2025	C06	• Three-phase MD200 standard software: ■ Firmware code: 03020993 ■ Version: A08.02 ■ Version tag: F7-10=U12.05/F7-11=U14.07/F7-15=000.00/F7-16=000.00 • Three-phase MD200-NC standard software: ■ Firmware code: 03029568 ■ Version: A01.01 ■ Version tag: F7-10=L12.05/F7-11=L14.06/F7-15=301.01/F7-16=600.03 • Single-phase MD200 standard software: ■ Firmware code: 03020573 ■ Version: B00 ■ Version tag: F7-10=U10.10/F7-11=U00.21/F7-15=000.00/F7-16=000.00 • Single-phase MD200-NC standard software: ■ Firmware code: 03021299 ■ Version: A01 ■ Version tag: F7-10=u10.09/F7-11=L00.17/F7-15=000.00/F7-16=010.00	**Added:** • *" Legal Information" on page 1* • *"1.2 Industrial Information Security" on page 22* • *" Service and Support" on page 346* **Modified:** • *"1.1 Fundamental Safety Instructions" on page 15* • *"3.2.2 Terminal Description" on page 31*Changed descriptions of control circuits DI1 to DI4 • *" Parameter List" on page 118* • *" Parameter Group" on page 169* • Corrected minor errors.

Revision date	Document version	Software version	Description
August 2024	C05	-	• Updated *" Front Cover" on page 1*, *" Preface" on page 2*, *"1.1 Fundamental Safety Instructions" on page 15*, and *" Back Cover" on page 347*. • Updated *"3.2.1 Terminal Wiring Diagram" on page 29* and added MD200-CAN model. • Updated *"5.2.2 Technical Specifications" on page 53*. • Updated the carrier frequency range to 0.8 kHz to 11 kHz. • Updated the overload capacity specifications. • Updated vibration specifications. • Added specifications for "Mechanical shock". • Updated *"5.8 Selection of Options" on page 67*, updated the external operating panel model and applicable model, and added the braking resistor selection and related descriptions. • Updated parameters descriptions: • Updated descriptions of parameters F0-02, F0-03, F0-04, F2-09, F2-11 and F3-13 that the drive does not support the installation of communication cards. • Updated operation descriptions of the main frequency - Auxiliary frequency in *" F0-07" on page 175*. • Updated the parameter name of *" F0-23" on page 181*. • Updated the maximum value and default value to 20.00 in *" F4-30" on page 210*. • Updated the maximum value to 10.00 and the reference to 0.00 kHz to 10.00 kHz in *" F6-11" on page 232*. • Updated the frequency reference setting of *" FC-00" on page 294*. • Changed "greater than" to "greater than or equal to" in *" F8-16" on page 246* and *" F8-17" on page 246*. • Updated the value 19 description of "When the main frequency is set through the keypad" to "When the main frequency source is digital setting" in *" F4-00" on page 196*. • Update the value 12 description of "greater than" to "greater than or equal to"for the cumulative operating time reach in *" F5-02" on page 214*. • Updated the value of F0-15 (Carrier frequency reference).

Revision date	Document version	Software version	Description
Continued	Continued	Continued	Continued • Updated the figure for process PID control parameter settings and step 1 description in the application example in *"6.2 Setting the Main Frequency Through PID" on page 78*. • Updated the description of the effect for writing to and not writing to EEPROM in *"7.1 Definition of the Communication Data Address" on page 101*. • Unified the product name to AC drive or drive. • Added descriptions of the software interface behind the interface for connecting the external operating panel in the wiring diagram of MD200XXX terminals in *"3.2.1 Terminal Wiring Diagram" on page 29*. • Updated the selection list of the fuse, contactor, and circuit breaker in *"5.3 Selection of Peripheral Components" on page 55*. • Updated the cable selection guide table in *"5.7 Selection of Cables and Tightening Torque" on page 63*. • Updated the carrier frequency in *"5.2.1 Electrical Specifications" on page 50*. • Updated the carrier frequency in *"5.2.2 Technical Specifications" on page 53*. • Updated the operating panel diagram of the MD200 series AC drive in *"2.1 Product Information" on page 24*. • Updated the parameter list. • Changed related descriptions to parameter auto-tuning. • Updated the maximum output frequency in *"5.2.1 Electrical Specifications" on page 50*. • Updated the parameter name of F0-23, the value range and default value of F4-30, the value range of F6-11, and the value range of U0-18 in *" Parameter List" on page 118*.

Revision date	Document version	Software version	Description
January 2024	C04	-	• Updated *" Front Cover" on page 1*, *" Preface" on page 2*, *"1.1 Fundamental Safety Instructions" on page 15*, and *" Back Cover" on page 347*. • Updated the operating panel diagram of the MD200 series AC drive in *"2.1 Product Information" on page 24*. • Added *"2.3 Nameplate and Model" on page 26* and added the product nameplate and model. • Added the description of "Braking resistor" in the AC drive model table in *"3.2.1 Terminal Wiring Diagram" on page 29*. • Updated DI-DI3 to DI1 to DI3 in *"3.2.2 Terminal Description" on page 31*. • Updated the description of F0-02 in *"6.1.1 Running Command Setting Source" on page 70*. • Updated F5-10 and F5-11, deleted AO2 descriptions, and updated "Two AO outputs supported" to "One AO output supported" in *"6.5 Analog Output Terminal" on page 93*. • Updated the default value of F0-01 to 2 and the description of value 2 to "V/f control" in *" F0-01" on page 169*. • Deleted the description "Applicable only to MD200XXX-NC models", modified the parameter name to DI/DO and DI4 type, and added the value description of F4-41 in *" F4-41" on page 213*. • Deleted startup/stop control parameter F6-03. • Deleted AO2 descriptions, and updated "Two AO outputs supported" to "One AO output supported" in *" F5-10" on page 226*.

Revision date	Document version	Software version	Description
Continued	Continued	Continued	Continued • Deleted AO2 descriptions, and updated "Two AO outputs supported" to "One AO output supported" in *" F5-11" on page 226*. • Added bit descriptions of U0-07 in *" U0-07" on page 330*. • Added bit descriptions of U0-08 in *" U0-07" on page 330*. • Deleted "Current value" and "U0-22" descriptions, and changed "Jumper cap J9" to "DIP switch S9" in *" U0-09" on page 331*. • Deleted U0-11 and U0-22. • Deleted "Current value" and "U0-11" descriptions in *" U0-21" on page 335*. • Deleted the descriptions of U0-11, U0-22, and F6-03 in *" Parameter List" on page 118*. This guide corresponds to the firmware code of 03020993, version label of F7-10 = U12.05/F7-11 = U14.07/F7-15 = 000.00/F7-16 = 000.00, and version of A08.01.

Revision date	Document version	Software version	Description
August 2023	C03	-	• Added the ambient temperature alarm threshold of Err14 in "3.1 Fault List". • Updated the relationship between ambient temperature and derating in "4.2.2 Technical Specifications". • Updated the emission requirements for CE certification in "4.4.1 Built-in Filter" and "4.4.2 External Filter". • Added the description of communication setting value H1000 in "6.4 Parameter Address Designation Rules". • Updated the default value of FD-05 in "6.5 Group FD Communication Parameters". • Added the value "27: Length counting input (DI4 for MD200XXX models and DI/DO for MD200XXX-NC models)" and descriptions "When DI4 or DI/DO is used as the pulse input terminal, function 27 must be assigned to DI4 or DI/DO. For MD200XXX models, DI4 is used. For MD200XXX-NC models, DI/DO is used." for F4-00 to F4-04 in "7.5 Input Terminals" and "8 Parameter List". • Deleted value 3 descriptions of F8-14 in "7.9 Group F8 Auxiliary Function" and "8 Parameter List". • Added H1000 for F0-03 = 9, F0-04 = 9, F0-11 = 5, F2-09 = 5, F2-11 = 5, FA-00 = 5, and FA-02 = 5 in "7.1 Group F0 Basic Functions" and "7.3 Group F2 Vector Control Parameters". • Added "Appendix 9: One Single-Phase AC Drive Driving Multiple Motors and Outline Dimensions of MDKE8 Operating Panel". • Updated the front cover, back cover, and fundamental safety instructions.

Revision date	Document version	Software version	Description
January 2023	C02	-	• Updated the nameplate in "1.1 Product Information". • Updated DI1 to DI4 descriptions in "2.2.2 Terminal Specifications". • Updated "3.1 List of Faults". • Deleted MDKE9 in "4.8 Option Selection Guide". • Updated "5.1.1 Running Command Setting Source". • Updated "5.1.3 Setting Running Commands Through Terminals". • Updated "5.4.2 Power Dip Ride-through". • Updated "5.5 Analog Output Terminals". • Updated "6.1 Definition of the Communication Data Address". • Updated "6.2 Modbus Communication Protocol". • Updated F7-10 to version U12.05, F7-11 to version U14.07, F7-15 to version 000.00, and F7-16 to version 000.00 in "7 Parameter Descriptions" and "8 Parameter List".
March 2022	C01	-	• Updated the DI and DO descriptions in section "2.2.3 Terminal Wiring". • Updated "7 Parameter Descriptions" and "8 Parameter List". • Updated descriptions of DI1 to DI4 and DI/DO.
October 2021	C00	-	• Updated "8 Parameter List". • Added "5 Function Application", "6 Communication", and "7 Parameter Groups". • Adjusted the sequence of level 1 titles.
March 2021	B10	-	Updated "3 Parameters".
November 2020	B09	-	Corrected minor errors.
August 2020	B08	-	Removed the customer service phone.
April 2020	B07	-	• Updated the nameplate in "1.1 Product Information". • Updated "2.2.1 Terminal Wiring Diagram". • Updated "2.2.3 Wiring of Control Signal Input Terminals". • Updated the output voltage in "5.2.1 Rated Specifications".

Revision date	Document version	Software version	Description
September 2019	B06	-	• Added "5.6 Selection of Cables and Tightening Torque". • Added "5.7 Selection of Options". • Added the input fuse specifications in "5.3 Selection of Peripherals Components". • Optimized the terminal wiring diagram in 2.2.1 "Terminal Wiring Diagram". • Added the thermal design power and air flow in "5.2.2 Technical Specifications".
December 2018	B05	-	Changed to the new logo.
September 2017	B04	-	• Added the single-phase and three-phase -NC models. • Added F4-04. • Added three-phase filters and reactors.
December 2016	B03	-	• Corrected minor mistakes. • Added three-phase 0.4 kW and 5.5 kW models.
September 2016	B02	-	• Added three-phase power supply input models. • Updated F7-10 to software version U12.00 and F7-11 to U13.00.
May 2016	B01	-	• Updated the parameter list to the function software version U0.10 and to the performance software version U10.06. • Added the EMC section.
November 2015	V1.0	-	• Changed the control circuit terminals AI1 and AO1 to AI and AO. • Changed the default of the maximum output voltage coefficient (A5-05) to 103.
September 2015	V0.0	-	Initial release.

Access to the Guide

This manual is not delivered with the product. You can obtain the PDF version by the following method:

- Log in to Inovance's website (*www.inovance.com*), choose **Support** > **Download**, search by keyword, and then download the PDF file.
- Scan the QR code on the product with your mobile phone.
- Scan the QR code below to install the app, where you can search for and download manuals.

Product Warranty Instructions

Under the condition of normal use, if the product is faulty or damaged, Inovance provides the warranty service within the warranty period (specified in the order). After the warranty period expires, maintenance will be charged.

Within the warranty period, maintenance will be charged for the damage caused by the following causes:

- The user does not perform operations in compliance with the user manual of the product.
- Damages caused by fire, flood, and abnormal voltage.
- The user uses the product for abnormal functions.
- The user uses the product outside the specified specification range.
- Damages caused by force majeure, such as natural disasters, earthquakes, or lightning strikes.

The maintenance fee is charged according to the latest Price List of Inovance. If otherwise agreed upon, the terms and conditions in the agreement shall prevail.

For details, see Product Warranty Card.

Table of Contents

Legal Information 1
Preface 2
1 Safety Precautions 15
1.1 Fundamental Safety Instructions 15
1.2 Industrial Information Security 22
2 Overview 24
2.1 Product Information 24
2.2 Operating Panel Operations 25
2.3 Nameplate and Model 26
3 Installation and Wiring 27
3.1 Installation 27
3.1.1 Layout in the Cabinet 27
3.1.2 Installation Method 27
3.1.3 Installation Environment 28
3.2 Wiring 29
3.2.1 Terminal Wiring Diagram 29
3.2.2 Terminal Description 31
3.2.3 Terminal Wiring 34
3.2.4 Post-wiring Inspection 40
4 Faulty 42
4.1 Fault List 42
4.2 Faults and Solutions 48
5 Specifications and Model Selection 50
5.1 Outline Dimension 50
5.2 Specification 50
5.2.1 Electrical Specifications 50
5.2.2 Technical Specifications 53
5.3 Selection of Peripheral Components 55
5.4 Selection of EMC Filters 57
5.4.1 Built-in Filter 57
5.4.2 External Filter 57
5.5 Selection of AC Input Reactors 61
5.6 Selection of dv/dt Output Reactors 62
5.7 Selection of Cables and Tightening Torque 63
5.8 Selection of Options 67

6 Function Application 70
6.1 Operation Command Setting. 70
6.1.1 Running Command Setting Source 70
6.1.2 Setting Operating Commands Through the Operating Panel. 71
6.1.3 Setting Running Commands Through Terminals 71
6.1.4 Setting Running Commands Through Communication 76
6.2 Setting the Main Frequency Through PID. 78
6.3 Control Performance 81
6.3.1 Output Current (Torque) Limit 81
6.3.2 Overvoltage Stall Suppression 83
6.4 Protection 85
6.4.1 Overload protection. 85
6.4.2 Power Dip Ride-Through 89
6.5 Analog Output Terminal 93
6.6 Industry Macro. 97
7 Communication 101
7.1 Definition of the Communication Data Address. 101
7.2 Modbus Communication Protocol 105
7.3 Communication Data Structure. 107
7.4 Parameter Address Expression Rules 110
7.5 Descriptions of Communication Parameters in Group FD 114
8 List of Parameters 118
9 Parameter Group. 169
9.1 F0 Basic Functions 169
9.2 F1 Motor Parameters 183
9.3 F3 V/f Control Parameters 186
9.4 F4 Input Terminal Parameters. 196
9.5 F5 Output Terminal Parameters 214
9.6 F6 Start/Stop Control Parameters 228
9.7 F7 Operating Panel and Display Parameters 234
9.8 F8 Auxiliary Functions 242
9.9 F9 Fault and Protection Parameters 257
9.10 FA PID Function. 279
9.11 FB Wobble Frequency, Fixed Length, and Counting Functions 290
9.12 FC: Multi-Reference and Simple PLC Parameters 294
9.13 FD Communication Parameters 307
9.14 FP Parameter Management. 311

9.15 A1 Virtual DI/DO 313
9.16 A5 Control Optimization Parameters 320
9.17 A6 AI Curve Setting 323
9.18 AC AI/AO Correction 325
9.19 U0 Basic Monitoring Parameters 328
10 Appendix 344
10.1 Single-Phase AC Drive Driving Multiple Motors 344
10.2 Appearance and Dimensions of MDKE8 345
Service and Support 346

1 Safety Precautions

1.1 Fundamental Safety Instructions

Safety Precautions

- This chapter presents essential safety instructions for a proper use of the equipment. Before operating the equipment, read through the guide and comprehend all the safety instructions. Failure to comply with the safety instructions may result in death, severe personal injuries, or equipment damage.
- "CAUTION", "WARNING", and "DANGER" items in the guide only indicate some of the precautions that need to be followed; they just supplement the safety precautions.
- Use this equipment according to the designated environment requirements. Damage caused by improper use is not covered by warranty.
- Inovance shall take no responsibility for any personal injuries or property damage caused by improper usage.

Safety Levels and Definitions

DANGER Indicates that failure to comply with the notice will result in death or severe personal injuries.

WARNING Indicates that failure to comply with the notice may result in death or severe personal injuries.

CAUTION Indicates that failure to comply with the notice may result in minor or moderate personal injuries or equipment damage.

Fundamental Safety Instructions

- Drawings in the guide are sometimes shown without covers or protective guards. Remember to install the covers or protective guards as specified first, and then perform operations in accordance with the instructions.
- The drawings in the guide are shown for illustration only and may be different from the product you purchased.
- Operators must take mechanical precautions to protect personal safety and wear protective equipment, such as anti-smashing shoes, safety clothing, safety glasses, protective gloves, and protective sleeves.

Unpacking
WARNING • Do not install the equipment if you find damage, rust, or signs of use on the equipment or accessories upon unpacking. • Do not install the equipment if you find water seepage or missing or damaged components upon unpacking. • Do not install the equipment if you find the packing list does not conform to the equipment you received.
CAUTION • Check whether the packing is intact and whether there is damage, water seepage, dampness, and deformation before unpacking. • Unpack the package by following the unpacking sequence. Do not strike the package violently. • Check whether there is damage, rust, or injuries on the surface of the equipment and equipment accessories before unpacking. • Check whether the package contents are consistent with the packing list before unpacking.

Storage and Transportation
WARNING • Large-scale or heavy equipment must be transported by qualified professionals using specialized hoisting equipment. Failure to comply may result in personal injuries or equipment damage. • Before hoisting the equipment, ensure that components such as the front cover and terminal blocks are secured firmly with screws. Loosely-connected components may fall off and result in personal injuries or equipment damage. • Never stand or stay below the equipment when the equipment is being hoisted by the hoisting equipment. • When hoisting the equipment with a steel rope, ensure the equipment is hoisted at a constant speed without suffering from vibration or shock. Do not turn the equipment over or let the equipment stay hanging in the air. Failure to comply may result in personal injuries or equipment damage.
CAUTION • Handle the equipment with care during transportation and mind your steps to prevent personal injuries or equipment damage. • When carrying the equipment with bare hands, hold the equipment casing firmly with care to prevent parts from falling. Failure to comply may result in personal injuries. • Store and transport the equipment based on the storage and transportation requirements. Failure to comply will result in equipment damage. • Avoid storing or transporting the equipment in environments with water splash, rain, direct sunlight, strong electric field, strong magnetic field, and strong vibration. • Avoid storing the product for more than three months. Long-term storage requires stricter protection and necessary inspections. • Pack the equipment strictly before transportation. Use a sealed box for long-distance transportation. • Never transport the equipment with other equipment or materials that may harm or have negative impacts on this equipment.

Installation
DANGER • The equipment must be operated only by professionals with electrical knowledge. Non-professionals are not allowed to install the equipment.
WARNING • Read through the guide and safety precautions before installation. • Do not install this equipment in places with strong electric or magnetic fields. • Before installation, check that the mechanical strength of the installation site can bear the weight of the equipment. Failure to comply will result in mechanical hazards. • Do not wear loose clothes or accessories during installation. Failure to comply may result in an electric shock. • When installing the equipment in a closed environment (such as a cabinet or casing), use a cooling device (such as a fan or air conditioner) to cool the environment down to the required temperature. Failure to comply may result in equipment over-temperature or a fire. • Do not retrofit the equipment. • Do not fiddle with the bolts used to fix equipment components or the bolts marked in red. • When the equipment is installed in a cabinet or final assembly, a fireproof enclosure providing both electrical and mechanical protections must be provided. The IP rating must meet IEC standards and local laws and regulations. • Before installing devices with strong electromagnetic interference, such as a transformer, install a shielding device for the equipment to prevent malfunction. • Install the equipment onto an incombustible object such as a metal. Keep the equipment away from combustible objects. Failure to comply will result in a fire.
CAUTION • Cover the top of the equipment with a piece of cloth or paper during installation. This is to prevent unwanted objects such as metal chippings, oil, and water from falling into the equipment and causing faults. After installation, remove the cloth or paper on the top of the equipment to prevent over-temperature caused by poor ventilation due to blocked ventilation holes. • Resonance may occur when the equipment operating at a constant speed switches to variable speed operations. In this case, install the vibration-proof rubber under the motor frame or use the vibration suppression function to reduce resonance.

Wiring
DANGER • Equipment installation, wiring, maintenance, inspection, or parts replacement must be performed only by professionals. • Before wiring, cut off all the power supplies of the equipment, and wait for at least the time designated on the equipment warning label before further operations because residual voltage still exists after power-off. After waiting for the designated time, measure the DC voltage in the main circuit to ensure the DC voltage is within the safe voltage range. Failure to comply will result in an electric shock. • Do not perform wiring, remove the equipment cover, or touch the circuit board with power ON. Failure to comply will result in an electric shock. • Check that the equipment is grounded properly. Failure to comply will result in an electric shock.
WARNING • Do not connect the input power supply to the output end of the equipment. Failure to comply will result in equipment damage or even a fire. • When connecting a drive to the motor, check that the phase sequences of the drive and motor terminals are consistent to prevent reverse motor rotation. • Cables used for wiring must meet cross sectional area and shielding requirements. The shield of the cable must be reliably grounded at one end. • Fix the terminal screws with the tightening torque specified in the user guide. Improper tightening torque may overheat or damage the connecting part, resulting in a fire. • After wiring is done, check that all cables are connected properly and no screws, washers or exposed cables are left inside the equipment. Failure to comply may result in an electric shock or equipment damage.
CAUTION • During wiring, follow proper electrostatic discharge (ESD) proceduresand wear an anti-static wrist strap. Failure to comply can result in damage to the equipment or internal product circuits. • Use shielded twisted pairs for the control circuit. Connect the shield to the grounding terminal of the equipment for grounding. Failure to comply can result in equipment malfunction.

Power-On
DANGER • Before power-on, check that the equipment is installed properly with reliable wiring and the motor can be restarted. • Check that the power supply meets equipment requirements before power-on to prevent equipment damage or a fire. • After power-on, do not open the cabinet door or protective cover of the equipment, touch any terminal, or disassemble any unit or component of the equipment. Failure to comply will result in an electric shock.
WARNING • Perform a trial run after wiring and parameter setting to ensure the equipment operates safely. Failure to comply may result in personal injuries or equipment damage. • Before power-on, check that the rated voltage of the equipment is consistent with that of the power supply. Failure to comply may result in a fire. • Before power-on, check that no one is near the equipment, motor, or machine. Failure to comply may result in death or personal injuries.

Operation
DANGER • The equipment must be operated only by professionals. Failure to comply will result in death or personal injuries. • Do not touch any connecting terminals or disassemble any unit or component of the equipment during operation. Failure to comply will result in an electric shock.
WARNING • Do not touch the equipment casing, fan, or resistor with bare hands to feel the temperature. Failure to comply may result in personal injuries. • Prevent metal or other objects from falling into the equipment during operation. Failure to comply may result in a fire or equipment damage.

Maintenance
DANGER • Equipment installation, wiring, maintenance, inspection, or parts replacement must be performed only by professionals. • Do not maintain the equipment with power ON. Failure to comply will result in an electric shock. • Before maintenance, cut off all the power supplies of the equipment and wait for at least the time designated on the equipment warning label. • When a permanent magnet motor is used, do not touch the motor terminals immediately after power-off because the motor terminals can generate induced voltage during rotation even after the equipment is powered off. Failure to comply will result in an electric shock.
WARNING • Perform routine and periodic inspection and maintenance on the equipment according to maintenance requirements and keep a maintenance record.

Repair
DANGER • Equipment installation, wiring, maintenance, inspection, or parts replacement must be performed only by professionals. • Do not repair the equipment with power ON. Failure to comply will result in an electric shock. • Before inspection and repair, cut off all the power supplies of the equipment and wait for at least the time designated on the equipment warning label.
WARNING • Submit a request for repair services in accordance with the product warranty agreement. • When the fuse is blown or the circuit breaker or earth leakage circuit breaker (ELCB) trips, wait for at least the time designated on the equipment warning label before power-on or further operations. Failure to comply may result in death, personal injury or equipment damage. • When the equipment is faulty or damaged, the troubleshooting and repair work must be performed by professionals that follow the repair instructions, with repair records kept properly. • Replace quick-wear parts of the equipment according to the replacement instructions. • Do not use damaged equipment. Failure to comply may result in death, personal injuries, or severe equipment damage. • After the equipment is replaced, check the wiring and set parameters again.

Disposal
WARNING • Dispose of retired equipment in accordance with local regulations and standards. Failure to comply may result in property damage, personal injuries, or even death. • Recycle retired equipment by observing industry waste disposal standards to avoid environmental pollution.

Safety Label

For safe equipment operation and maintenance, comply with the safety labels on the equipment. Do not damage or remove the safety labels. See the following table for descriptions of the safety labels.

To ensure safe operation, comply with equipment-related safety labels. See the following table for descriptions of the safety labels.

Safety Label	Description
	• Read through the safety instructions before operating the equipment. Failure to comply may result equipment damage, personal injuries, or even death. • Do not touch the terminals or remove the cover with power ON or within 10 min after power-off. Failure to comply will result in electric shock.

1.2 Industrial Information Security

The product provides interfaces to connect to the network and transmit data through the network interfaces. In order to protect factories, systems, machines and networks from network attacks and ensure their safe operation, implement appropriate industrial information security protection mechanisms.

The customer is responsible for providing and continuously ensuring a secure connection between the product and the network to prevent unauthorized access to its factories, systems, machines and networks. The system can only be connected to the corporate network or the Internet if it is connected securely and appropriate security measures are in place (for example, using anti-virus software and a firewall).

Inovance continuously develops and improves products and solutions to improve safety. It is strongly recommended that you update the product promptly and always use the latest version.

CAUTION

Tampering with software (such as viruses, Trojans, and Worms) can lead to unsafe drive state, which can put the device in an unsafe operation state. This may result in death, serious injury, and property damage. Observe the following strictly.

- Always use the latest software version. If the product version is no longer supported or the latest version of the program is not applied, customers are at increased risk of cyber-attacks.
- Take proper protection measures (including but not limited to deploying anti-virus software, firewall, WAF, IPS/IDS, situational awareness system, ID verification, and data encryption) to prevent files in the mobile storage device from being damaged by malware and protect products, networks, systems, and interfaces from unauthorized access, disturbance, intrusion, data disclosure, or information theft.
- Check all safety-related interfaces and settings after commissioning.

2 Overview

2.1 Product Information

The MD200 is compact by adopting the booksize structure. Supporting seamless side-by-side installation and guide rail-based installation, it is easy to install. The wiring terminals are uncovered, simplifying wiring, operation, and maintenance. The built-in input filters are available for all series to enhance the anti-interference ability and reduce external interference. Typical applications can be realized with one key using the macro parameters.

The MD200 series AC drive is a basic AC drive designed to control and regulate the speed and torque of three-phase AC asynchronous motors. It can be used to drive automated production equipment in various industries, such as textile, paper making, wire drawing, machine tool, packaging, food, fan, and water pump.

The following figure shows the operating panel of the MD200.

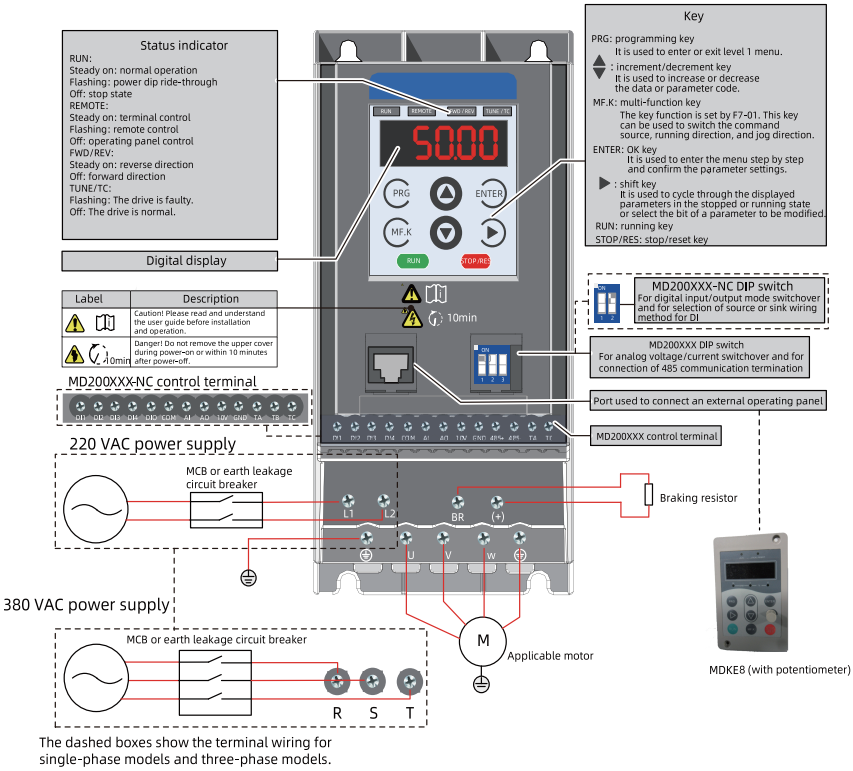

Figure 2-1 MD200 series AC drive operating panel

2.2 Operating Panel Operations

Quick commissioning flowchart:

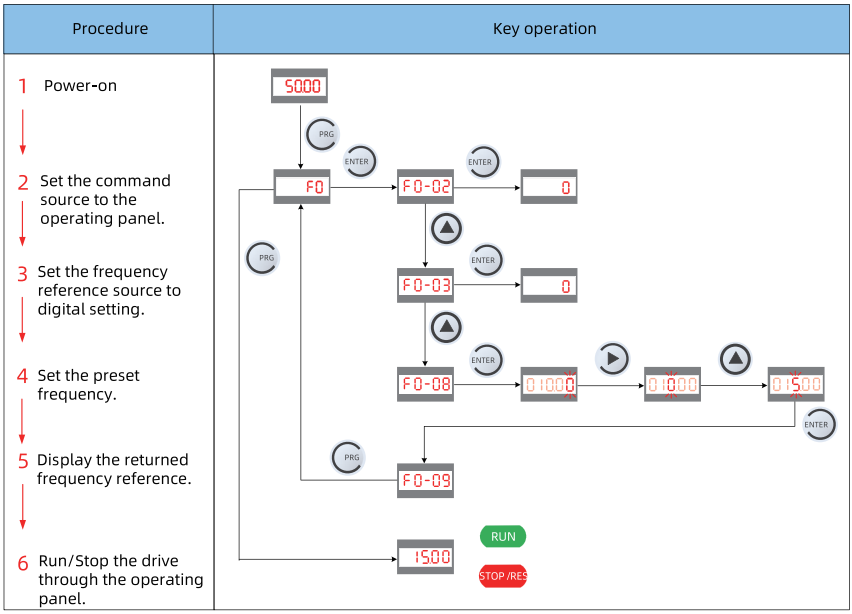

Figure 2-2 Quick commissioning flowchart

Quick parameter view flowchart:

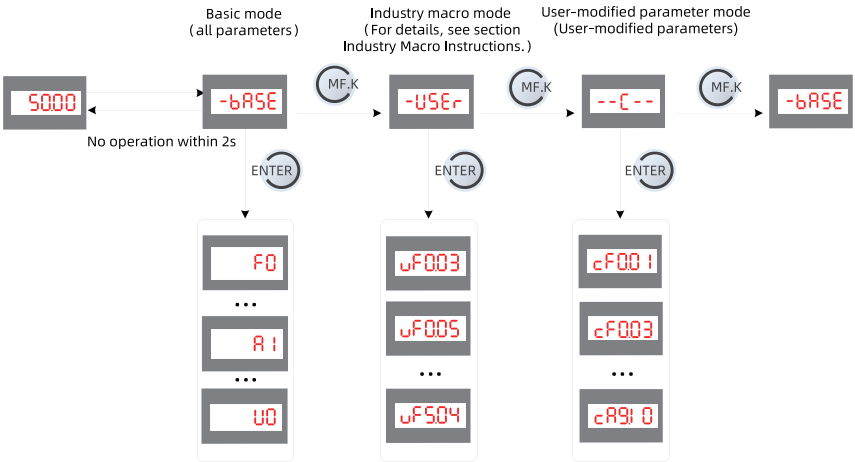

Figure 2-3 Quick parameter view flowchart

2.3 Nameplate and Model

Model description

MD200 S 1.5 B - NC

① ② ③ ④ ⑤

① **Product name** MD200: AC drive series	④ **Braking unit** B: with the braking unit Null: Without the braking unit
② **Unit type** S: Single-phase 200 V to 240 V T: Three-phase 380 V to 480 V	⑤ **Communication** Null: Standard models that support RS485 communication NC: Without the communication interface
③ **Applicable motor power** 0.4 kW … 2.2 kW **Applicable motor** 0.4 kW … 2.2 kW	

Nameplate description

Note

The following nameplate is used as an example. The actual nameplate is subject to the product.

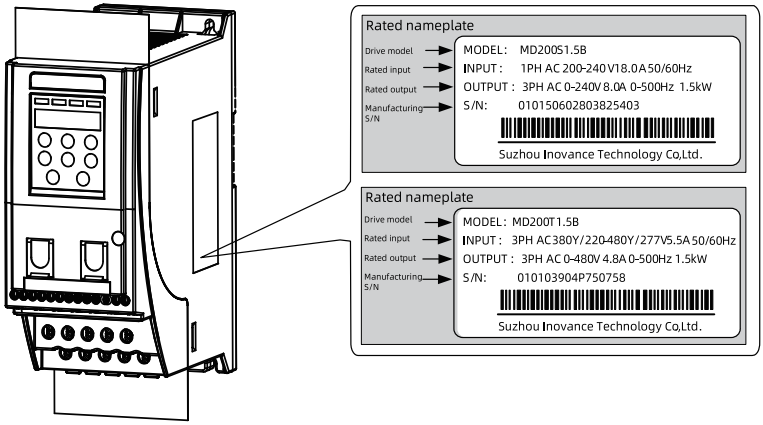

Figure 2-4 Nameplate description

3 Installation and Wiring

3.1 Installation

3.1.1 Layout in the Cabinet

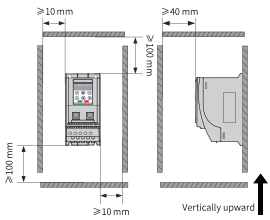

Single device installation

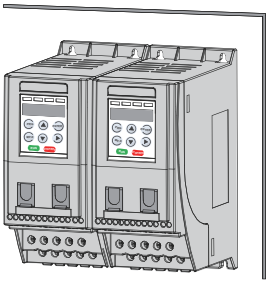

Side-by-side installation

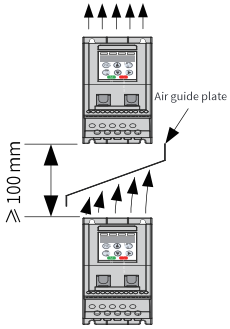

Dual-row installation

3.1.2 Installation Method

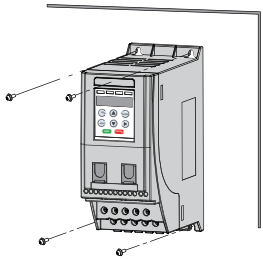

Installation by screw

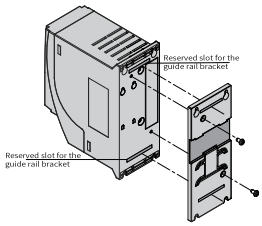

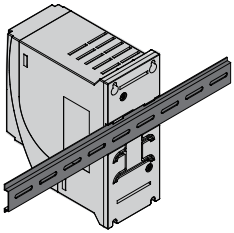

Installation by guide rail

Note

- To install the AC drive with screws, all the four screws must be tightened. Never fix the AC drive with only the two upper screws.
- To install the AC drive with a guide rail, order the DIN guide rail (option). For details, see *"5.8 Selection of Options" on page 67*.

3.1.3 Installation Environment

1. Ambient temperature: The AC drive's service life is greatly influenced by the ambient temperature. Do not run the AC drive under a temperature exceeding the allowed temperature range (-10℃ to +50℃).
2. Install the AC drive on a flame-retardant object, with sufficient clearance reserved for heat dissipation. The drive generates significant heat during working. Use screws to install the AC drive to the mounting bracket vertically.
3. Install the AC drive in a place not prone to vibration. The vibration level must be lower than or equal to 0.6 g. Keep the drive away from equipment such as punch presses.
4. Avoid direct sunlight exposure, moisture, and water drop.
5. Install the AC drive at a place free from corrosive, explosive, and combustible gas.
6. Install the AC drive in a place free from oil and dust.

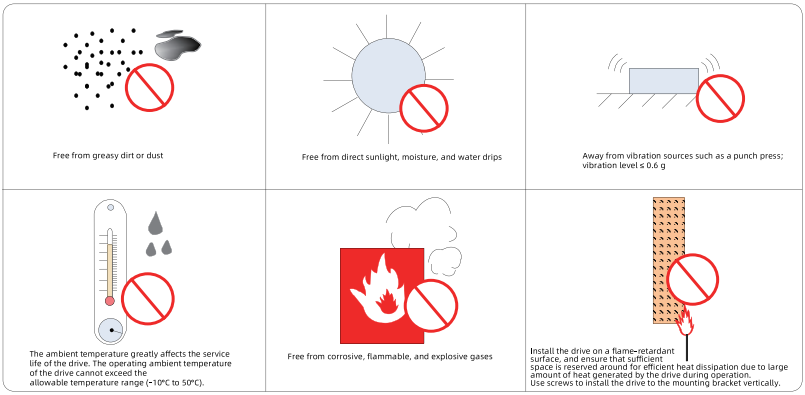

Figure 3-1 Installation location requirements

3.2 Wiring

3.2.1 Terminal Wiring Diagram

MD200XXX terminal wiring diagram

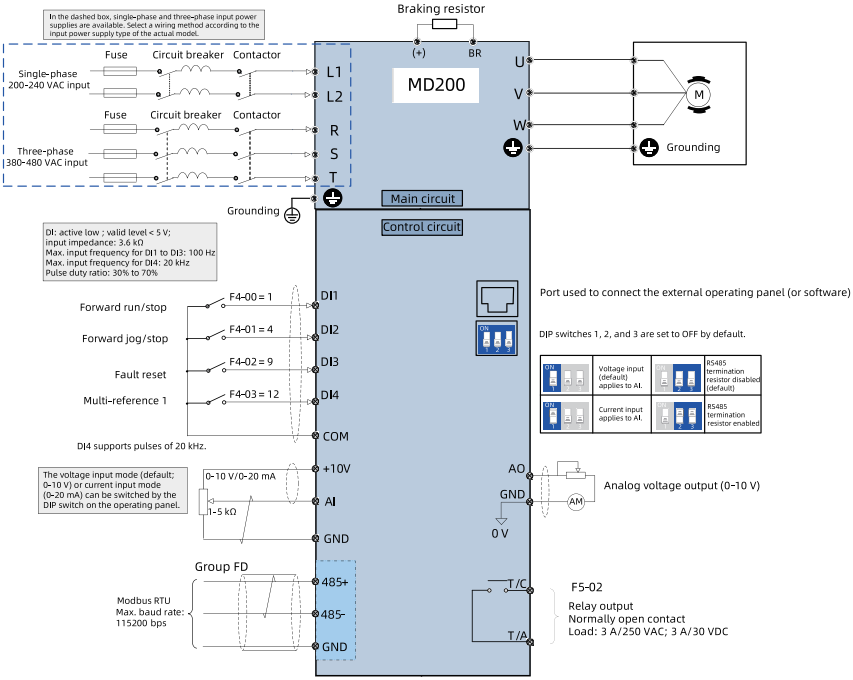

Figure 3-2 Wiring diagram of single-phase/three-phase power supply input models (MD200S0.4B to MD200S2.2B and MD200T0.4B to MD200T3.7B)

Note The MD200-CAN models use the 0202AG42 control board. The terminal wiring diagram, terminal wiring, use method, and CAN communication descriptions are consistent with those of the MD200XXX models.

MD200XXX-NC terminal wiring diagram

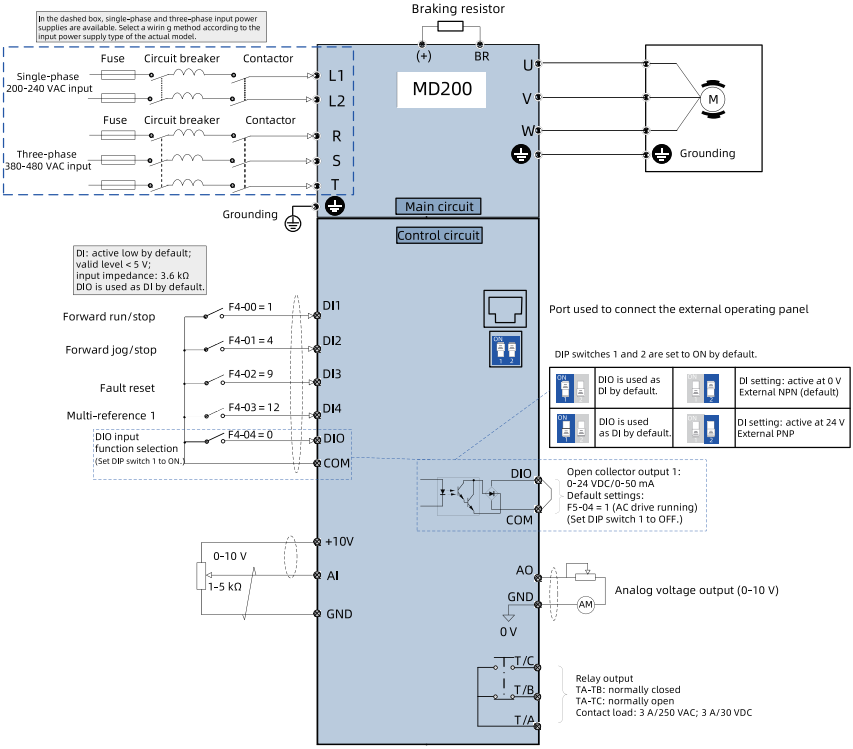

Figure 3-3 Wiring diagram of single-phase/three-phase power supply input models

(MD200S0.4B-NC to MD200S2.2B-NC and MD200T0.4B-NC to MD200T3.7B-NC)

CAUTION

- Noise interference may result in malfunction. Therefore, keep the signal cable at least 10 cm away from the power cable. Configure the input and output sides of the main circuit separately.
- Do not leave cuttings inside the drive while wiring. Failure to comply may result in errors, faults, and malfunctions.
- Keep the AC drive clean. Do not drop cuttings or dust into the AC drive while drilling mounting holes on the control cabinet.

3.2.2 Terminal Description

The following table describes the main circuit terminal and control circuit terminal. For details on terminal layout, see *"2.1 Product Information" on page 24*.

Terminal type	Symbol	Terminal name	Function description
Main circuit	L1, L2	Single-phase power supply input	The terminals are connected to the power supply. L1 is connected to the live wire and L2 is connected to the neutral wire.
	R, S, T	Three-phase power supply input	Connected to the grid power supply.
	U, V, W	AC drive output	Connected to the motor.
	BR, (+)	Braking resistor connection	Used to connect the braking resistor.
	⏚	Grounding terminal	Grounding

Terminal type	Symbol	Terminal name	Function description	
Control circuit	DI1 to DI4	Digital input (DI)	Multi-functional input terminal	Active low; active level < 5 V MD200XXX models: DI1 to DI3 are low-speed DIs with the frequency lower than 100 Hz. DI4 can be used as either the high-speed pulse input terminal (supports 20 kHz frequency at most) or the DO without switchover. To use DI4 as the DO, set F4-41 to 1 and set F5-04 to select a function. MD200XXX-NC models: DI1 to DI4 are low-speed DIs with the frequency lower than 100 Hz. DI4 of the MD200-NC models cannot be used as the DO. The models provide the DI/DO terminal, which can be switched by DIP switch.
	DI/DO	DI/DO	Multi-functional DI/DO	The DI/DO is available only for the MD200XXX-NC models. The DI/DO can be used as the DI or DO (with the common terminal COM), which can be switched over by the DIP switch, as shown in *"Figure 3-3 " on page 30* . When the DI/DO is used as the DI, it is the high-speed pulse terminal with the maximum frequency of 20 kHz.
	COM	+24V power supply ground	Internal 24 V grounding	It is internally isolated from GND.
	+10 V	AI and AO	10 V analog voltage output	10 V ± 10%; maximum current: 10 mA
	GND		Analog ground	It is internally isolated from COM.
	AI		Analog single-end input channel 1	0–10 V or 0–20 mA input; 12-bit resolution; calibration accuracy of 0.5%; response time < 8 ms
	AO		Analog output 1	AO: 0–10 V; calibration accuracy of 100 mV; 10-bit resolution; calibration accuracy of 1%

Terminal type	Symbol	Terminal name	Function description	
Control circuit	TA-TC, TA-TB	Relay output	Relay output	TA-TC: Normally open; TA-TB: Normally closed Contact load: 3 A/250 VAC, 3 A/30 VDC TA-TB applies only to MD200XXX-NC models.
	CGND	Communication	It shares the grounding terminal with 10V.	It shares the grounding terminal GND with 10V.
	485+		RS485 positive communication signal	Half-duplex RS485 communication, with the highest baud rate of 115200 for up to 64 nodes Note: The RS485 communication function is applied only to MD200XXX models.
	485-		RS485 negative communication signal	

3.2.3 Terminal Wiring

AI

Weak analog voltage signals are prone to external interference. Therefore, a shielded cable is required, and the wiring distance must be as short as possible (no longer than 20 m), as shown in *"Figure 3-4 " on page 34* . In scenarios where analog signals are severely interfered, install a filter capacitor or a ferrite core on the analog signal source side, as shown in *"Figure 3-5 " on page 35* .

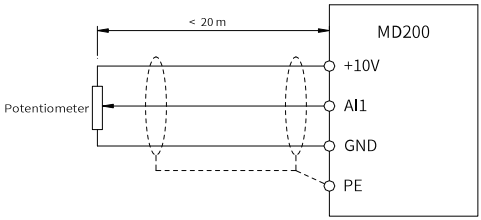

Figure 3-4 AI wiring in normal scenarios

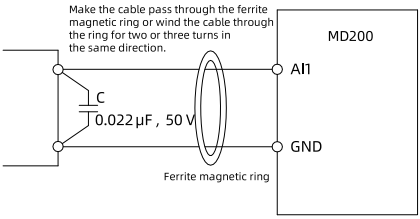

Figure 3-5 AI wiring when analog signals are severely interfered

DI

Generally, use the shielded cable and keep the cable length as short as possible (not longer than 20 m). When the external power supply is adopted, necessary filtering measures must be taken to prevent interference to the power supply. The contact control mode is recommended.

1. MD200XXX models

   DI1 to DI3 are low-speed DIs, and DI4 is the high-speed pulse input terminal when used as the DI.

   MD200XXX models support only sink (NPN) wiring mode, as shown in the following figure.

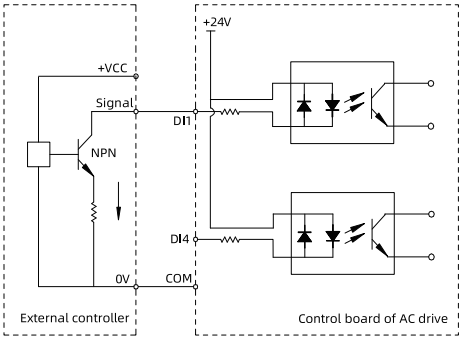

Figure 3-6 Sink (NPN) wiring

In the mode, the DIs of different AC drives cannot be connected in parallel. Otherwise, the DI may malfunction. If DIs of different AC drives must be connected in parallel, connect the anode of a diode to the DI in series and the diode needs to satisfy the following requirement: IF > 10 mA and UF < 1 V, as shown in .

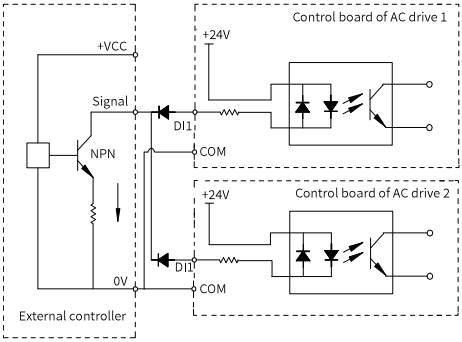

Figure 3-7 Parallel connection of DIs of multiple drives in the sink mode (NPN)

2. MD200XXX-NC models

DI1 to DI4 are low-speed DIs. When the DI/DO is used as the DI, it is the high-speed pulse input terminal. Its function can be selected by the DIP switch, as shown in *"Figure 3-3 " on page 30* .

MD200XXX-NC models support sink and source wiring modes, which can be selected by the DIP switch.

- Sink (NPN) wiring

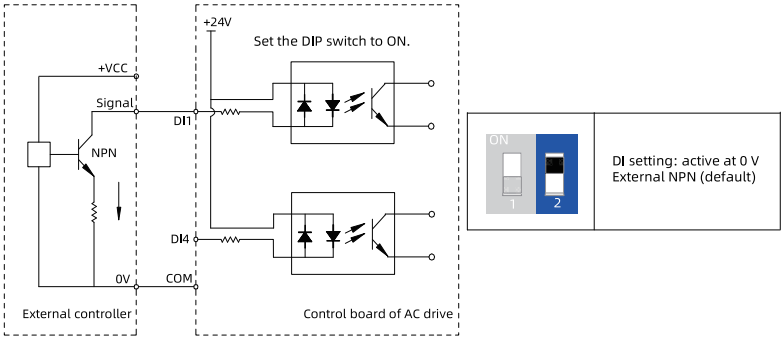

Figure 3-8 Sink (NPN) wiring

In the mode, the DIs of different AC drives cannot be connected in parallel. Otherwise, the DI may malfunction. If DIs of different AC drives must be connected in parallel, connect the anode of a diode to the DI in series and the diode needs to satisfy the following requirement: IF > 10 mA and UF < 1 V, as shown in .

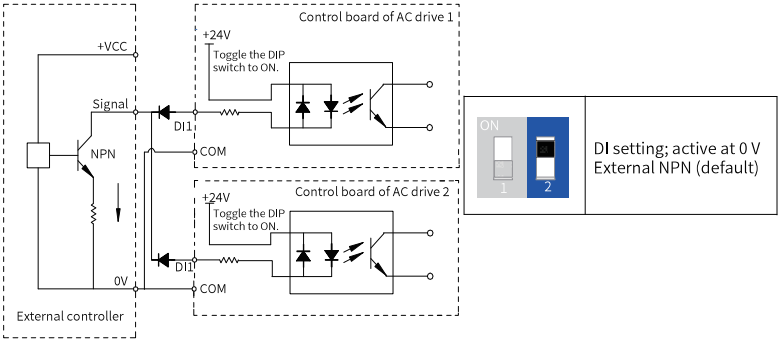

Figure 3-9 Parallel connection of DIs of multiple drives in the sink mode (NPN)

- Source (PNP) wiring

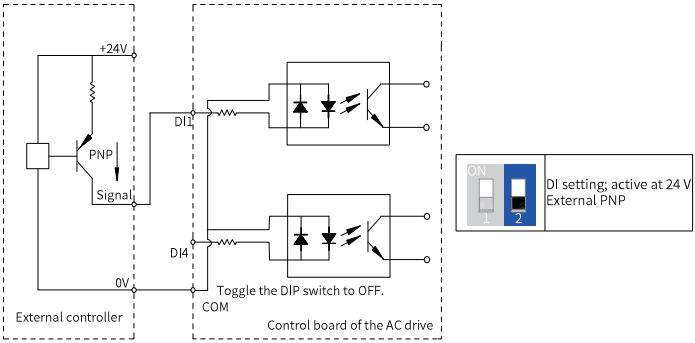

Figure 3-10 Source (PNP) wiring

DO

1. MD200XXX models

   DI4 is the used as the DO for MD200XXX models.

   When the DO needs to drive a relay, connect a snubber diode on both sides of the relay coil. Otherwise, the 24 V DC power supply may be damaged. Ensure that the driving capacity does not exceed 50 mA. Ensure that the polarity of the snubber diode is correct, as shown in the following figure. Otherwise, the 24 VDC power supply will be damaged immediately upon the DO output.

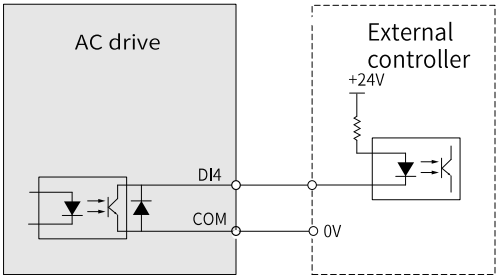

Figure 3-11 DO wiring

The inductive load (relay, contactor, and motor) causes voltage peak after the current is disconnected. Use a VDR at the relay contact for protection and install snubber circuits such as VDRs, RC absorption circuits, and diodes on the inductive load to minimize interference upon cutoff.

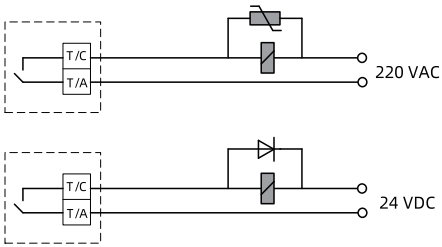

Figure 3-12 Anti-interference processing of relay output terminals

2. MD200XXX-NC models

   DI/DO is used as the DO for MD200XXX-NC models. The function of DI/DO can be selected by the DIP switch, as shown in *"Figure 3-3 " on page 30* .

   When the DO needs to drive a relay, connect a snubber diode on both sides of the relay coil. Otherwise, the 24 V DC power supply may be damaged. Ensure that the driving capacity does not exceed 50 mA. Ensure that the polarity of the snubber diode is correct, as shown in the following figure. Otherwise, the 24 VDC power supply will be damaged immediately upon the DO output.

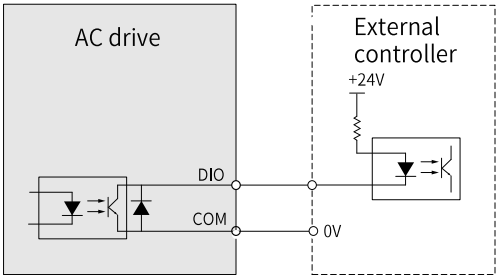

Figure 3-13 DO wiring

The inductive load (relay, contactor, and motor) causes voltage peak after the current is disconnected. Use a VDR at the relay contact for protection and install snubber circuits such as VDRs, RC absorption circuits, and diodes on the inductive load to minimize interference upon cutoff.

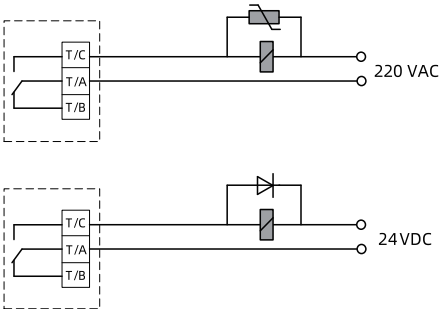

Figure 3-14 Anti-interference processing of relay output terminals

CAUTION

- Wiring tools: Phillips or straight screwdriver; main circuit terminal screw ≥ M4; control circuit terminal screw ≥ M3
- It is recommended that L1 be connected with the live wire and L2 be connected with the neutral wire. Connect the output cables and PE cables first.
- For control terminals, 0.3 mm^2 to 0.75 mm^2 cables can be used.
- The contact leakage current of the AC drive is greater than 3.5 mA. Therefore, the AC drive must be well grounded. Otherwise, electric shocks will be caused.
- Use a screwdriver or other tools rather than using fingers to set the DIP switch .
- If the AC drive is used in an IT power system (with the neutral point ungrounded), the ground jumper (on the left of the AC drive) of the VDR must be removed.

Remove the ground jumper (on the left of the AC drive) of the safety capacitor (EMC) when the AC drive is used in the following cases. The locations of the ground jumpers of the VDR and EMC are shown in the following figure.

1. The AC drive is not grounded, and the bottom heatsink of the AC drive is in direct contact with the metal cabinet, which can easily cause electric shocks.
2. The residual current device trips upon startup after it is installed.

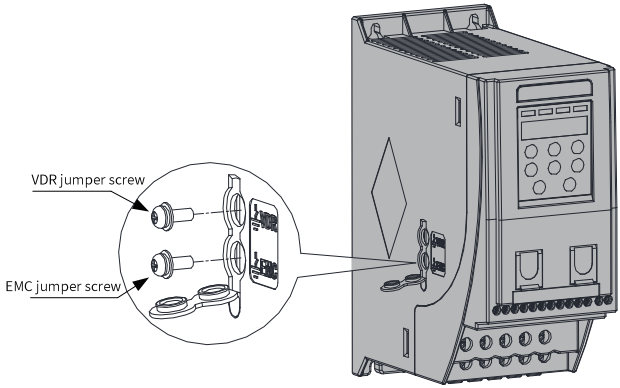

Figure 3-15 Positions of VDR and EMC ground jumpers

3.2.4 Post-wiring Inspection

After wiring has been completed, check the following items and ensure that each item has passed the inspection.

Table 3–1 Post-wiring inspection checklist

Item	Description	Compliance
1	When single-phase power supply is input, check that cables are connected to L1 and L2. When three-phase power supply is input, check that cables are connected to R, S, and T.	☐
2	Check that motor cables are connected to the U, V, and W terminals.	☐
3	Check that the cross-sectional area of the main circuit cable meet the requirements.	☐
4	Check that the heat-shrink tubing is applied to the copper lug and conductors of the main circuit cable and the tubing completely wraps the conducting parts of the cable.	☐

Item	Description	Compliance
5	Check whether the motor output cable exceeds 50 m. If yes, reduce the carrier frequency through F0-15.	☐
6	Check that the wiring is correct.	☐
7	Check that the output terminals and control signal cable terminals are connected securely.	☐
8	Check that the braking resistor and braking unit (if used) are correctly connected, and the resistance is proper.	☐
9	Check that shielded cables are used as control circuit AI and DI signal cables, and the cable length is within 20 m.	☐
10	Check that the control circuit cables and main circuit cables are routed through different routes.	☐

4 Faulty

4.1 Fault List

The AC drive supports 25 faults and protection functions. If a fault occurs, the protection function is activated, the AC drive stops output, the contact of the fault relay works, and the operating panel displays the fault code. Before seeking help, you can find the possible causes and rectify the fault according to the instructions in this section. If the fault cannot be rectified, contact the agent or Inovance for technical support. The following table describes the faults and solutions.

Fault name	Display on the operating panel	Possible cause	Solution
Overcurrent during acceleration	Err02	1. The output circuit of the AC drive is grounded or short circuited. 2. The acceleration time is too short. 3. The manual torque boost value or V/f curve is inappropriate. 4. The voltage is too low. 5. The motor is started during rotating. 6. A sudden load is applied during acceleration. 7. The AC drive power class is too low. 8. The resistance of the braking resistor is too low or the braking resistor is short circuited. 9. The motor is short-circuited to ground.	1. Eliminate external faults. 2: Increase the acceleration time. 3. Adjust the manual torque boost value or V/f curve. 4. Adjust the voltage to a normal range. 5. Enable flying start or start the motor after the motor stops. 6. Remove the added load. 7. Select an AC drive of a higher power class. 8. Replace the braking resistor. 9. Replace the cable or motor.
Overcurrent during deceleration	Err03	1. The output circuit of the AC drive is grounded or short circuited. 2. The deceleration time is too short. 3. The voltage is too low. 4. A sudden load is applied during deceleration. 5. No braking resistor is installed. 6. The resistance of the braking resistor is too low or the braking resistor is short circuited. 7. The motor is short-circuited to ground.	1. Eliminate external faults. 2. Increase the deceleration time. 3. Adjust the voltage to a normal range. 4. Remove the added load. 5. Install a braking resistor. 6. Replace the braking resistor. 7. Replace the cable or motor.

Fault name	Display on the operating panel	Possible cause	Solution
Overcurrent during operation at constant speed	Err04	1. The output circuit of the AC drive is grounded or short circuited. 2. The voltage is too low. 3. A sudden load is added during running. 4. The AC drive power class is too low. 5. The resistance of the braking resistor is too low or the braking resistor is short circuited. 6. The motor is short-circuited to ground.	1. Eliminate external faults. 2. Adjust the voltage to a normal range. 3. Remove the added load. 4. Select an AC drive of a higher power class. 5. Replace the braking resistor. 6. Replace the cable or motor.
Overvoltage during acceleration	Err05	1. The input voltage is too high. 2. External force drives the motor during acceleration. 3. The acceleration time is too short. 4. A braking resistor is not installed.	1. Adjust the voltage to a normal range. 2. Remove the external force or install a braking resistor. 3. Increase the acceleration time. 4. Install a braking resistor.
Overvoltage during deceleration	Err06	1. The input voltage is too high. 2. External force drives the motor during deceleration. 3. The deceleration time is too short. 4. A braking resistor is not installed.	1. Adjust the voltage to a normal range. 2. Remove the external force or install a braking resistor. 3. Increase the deceleration time. 4. Install a braking resistor.
Overvoltage during operation at constant speed	Err07	1. The input voltage is too high. 2. External force drives the motor during acceleration.	1. Adjust the voltage to a normal range. 2. Remove the external force or install a braking resistor.
Control power supply fault	Err08	1. The input voltage is not within the specified range.	1. Adjust the input voltage to the specified range.

Fault name	Display on the operating panel	Possible cause	Solution
Undervoltage fault	Err09	1. An instantaneous power failure occurs. 2. The input voltage of the drive is beyond the specified range. 3. The bus voltage is abnormal. 4. The rectifier bridge and pre-charge resistor are faulty. 5. The drive board is faulty. 6. The control board is faulty.	1. Reset the fault. 2. Adjust the voltage to a normal range 3. Contact the agent or Inovance for technical support. 4. Contact the agent or Inovance for technical support. 5. Contact the agent or Inovance for technical support. 6. Contact the agent or Inovance for technical support.
AC drive overload	Err10	1. The load is too heavy or locked-rotor occurs on the motor. 2. The AC drive power class is too low.	1. Reduce the load and check the motor and mechanical conditions. 2. Select an AC drive of a higher power class.
Motor overload	Err11	1. The motor protection parameter F9-01 is set improperly. 2. The load is too heavy or locked-rotor occurs on the motor. 3. The AC drive power class is too low.	1. Set F9-01 to a proper value. 2. Reduce the load and check the motor and mechanical conditions. 3. Select an AC drive of a higher power class.
Input phase loss	Err12	1. The three-phase input power supply is abnormal. 2. The drive board is faulty. 3. The lightning protection board is abnormal. 4. The control board is abnormal.	1. Eliminate external faults. 2. Contact the agent or Inovance for technical support. 3. Contact the agent or Inovance for technical support. 4. Contact the agent or Inovance for technical support.

Fault name	Display on the operating panel	Possible cause	Solution
Output phase loss	Err13	1. The cables connecting the AC drive and the motor are abnormal. 2. The three-phase outputs of the AC drive are unbalanced when the motor is running. 3. The drive board is faulty. 4. The module is faulty.	1. Remove external faults. 2. Ensure that the motor three-phase winding is normal. 3. Contact the agent or Inovance for technical support. 4. Contact the agent or Inovance for technical support.
Drive overtempera ture	Err14	1. If the ambient temperature exceeds 75℃, the drive will report an alarm. 2. The air duct is blocked. 3. The fan is damaged. 4. The thermistor of the module is damaged. 5. The inverter is faulty.	1. Lower the ambient temperature. 2. Clean the air duct. 3. Replace the AC drive. 4. Replace the AC drive. 5. Replace the AC drive.
External device fault	Err15	1. The external fault signal is input via the multi-function DI. 2. The external fault signal is input via the virtual I/O terminal.	1. Reset the drive. 2. Reset the drive.
Communica tion error	Err16	1. The host controller is abnormal. 2. The communication cable is abnormal. 3. Communication parameters in group FD are set improperly.	1. Check wiring of the host controller. 2. Check the communication wiring. 3. Set communication parameters in group FD properly.
Current detection fault	Err18	The drive board is abnormal.	Replace the AC drive.
Motor parameter auto-tuning fault	Err19	1. The motor parameters are not set according to the nameplate. 2. Motor parameter auto-tuning times out.	1. Set the motor parameters according to the nameplate. 2. Ensure that the cable connecting the AC drive and the motor is connected properly.
Error in read/ write operations on EEPROM	Err21	The EEPROM chip is damaged.	Replace the AC drive.

Fault name	Display on the operating panel	Possible cause	Solution
The AC drive output is short-circuited to ground.	Err23	1. The motor is short-circuited to ground. 2. The inverter upper transistor is damaged, which needs to be determined by professional.	1. Replace the cable or motor. 2. Replace the AC drive.
Cumulative running time reach	Err26	1. The accumulative running time reaches the set value.	1. Initialize parameters to clear the record.
User-defined fault 1	Err27	1. The user-defined fault 1 signal is input via the multi-function DI. 2. The user-defined fault 1 signal is input via the virtual I/O terminal.	1. Reset the drive. 2. Reset the drive.
User-defined fault 2	Err28	1. The user-defined fault 2 signal is input via the multi-function DI. 2. The user-defined fault 2 signal is input via the virtual I/O terminal.	1. Reset the drive. 2. Reset the drive.
Cumulative power-on time reach	Err29	The cumulative power-on time reaches the set value.	Initialize parameters to clear the record.
Load loss	Err30	The operation current of the AC drive is lower than the value of F9-64.	Check whether the load is disconnected or whether F9-64 and F9-65 are set based on the actual working condition.
PID feedback loss during running	Err31	The PID feedback is lower than the value of FA-26.	Check the PID feedback signal or set FA-26 to a proper value.
Pulse-by-pulse current limit fault	Err40	1. The load is too heavy or locked-rotor occurs on the motor. 2. The AC drive power class is too low.	1. Reduce the load and check the motor and mechanical conditions. 2. Select an AC drive of a higher power class.

Fault name	Display on the operating panel	Possible cause	Solution
Excessive speed deviation	Err42	1. Locked-rotor occurs on the motor. 2. F9-69 and F9-70 are set improperly. 3. The cable connecting the output side (U/V/W) of the AC drive and the motor is abnormal.	1. Check the mechanical conditions. Check whether motor parameter auto-tuning is performed and whether F2-10 is set to an excessively low value. 2. Set F9-69 and F9-70 correctly based on actual conditions. 3. Check and ensure the cable connecting the AC drive and the motor is connected.
Slave fault during speed synchroniza tion	Err55	When the speed synchronization function is enabled, the master receives CAN communication data but fails to detect the slave. Then the master reports Err55 (point-to-point slave fault).	1. Ensure that the CAN communication cable of the slave is connected. 2: Ensure that the CAN communication of the slave is normal.

4.2 Faults and Solutions

The following faults may occur during use of the AC drive. When these faults occur, perform simple analysis and rectify the faults based on the following table.

No.	Fault description	Possible cause	Solution
1	There is no display upon power-on.	There is no power supply or the power supply voltage is too low. The AC drive is damaged.	Check the input power supply. Replace the AC drive.
2	"HC" is displayed upon power-on.	The cable connecting the drive board and the control board is in poor contact. Related components on the control board are damaged. The motor or the motor cable is short circuited to the ground. The grid voltage is excessively low.	Re-connect the 4-conductor and 28-conductor flat cables. Contact the agent or Inovance for technical support.

No.	Fault description	Possible cause	Solution
3	Err14 (module overtemperature) is reported frequently.	The carrier frequency is set too high. The cooling fan is damaged or the air duct is blocked. Components (thermistor or others) inside the drive are damaged.	Reduce the value of F0-15 (Carrier frequency). Replace the fan or clean the air duct. Contact the agent or Inovance for technical support.
4	The motor does not rotate when the AC drive is operating.	The cable between the AC drive and the motor is connected incorrectly. The motor parameters are set incorrectly. The drive board is faulty.	Ensure that the cable between the AC drive and the motor is connected correctly. Replace the motor or rectify mechanical faults. Check and set the motor parameters again.
5	The DI is inactive.	The related parameters are set incorrectly. The external signal is incorrect. The control board is faulty.	Check and set the parameters in group F4 again. Re-connect the external signal cable. Contact the agent or Inovance for technical support.
6	The drive detects overcurrent and overvoltage frequently.	Motor parameters are set improperly. The acceleration/deceleration time is improper. The load fluctuates.	Set the motor parameters correctly. Set proper acceleration/deceleration time. Contact the agent or Inovance for technical support.

5 Specifications and Model Selection

5.1 Outline Dimension

The following figure shows the outline dimensions of the MD200 series AC drive.

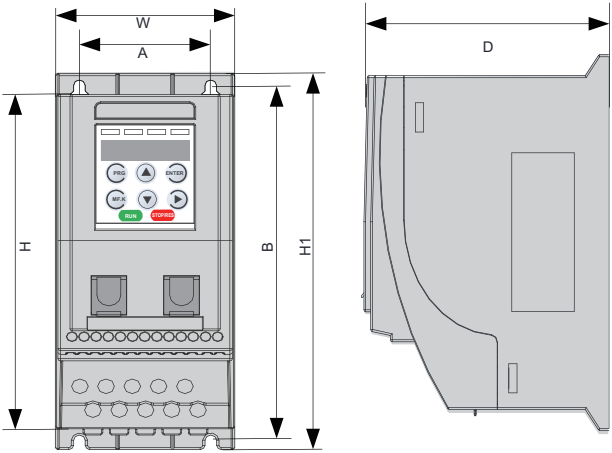

Outline dimension (mm)				Mounting hole dimension (mm)		Mounting hole diameter (mm)	Weight (kg)
H1	H	W	D	A	B		
180	160	75	145	55	170	Φ5.0	1.1

5.2 Specification

5.2.1 Electrical Specifications

Table 5–1 MD200 models and technical data (single-phase 200–240 V)

Item	Specification			
MD200SXX(B)(-NC)	0.4	0.75	1.5	2.2
Applicable motor capacity (kW)	0.4	0.75	1.5	2.2

Item		Specification			
Output	Rated output current (A)	2.5	4.6	8	11
	Output voltage	Three-phase 0 VAC to 240 VAC			
	Maximum output frequency	599 Hz (changeable through parameter)			
	Carrier frequency	0.8 kHz to 11.0 kHz (automatically adjusted according to the load)			
	Overload capability	60s at 150% of the rated current			
Power supply	Rated input current (A)	6.5	11	18	27
	Rated voltage and frequency	Single-phase 200 V to 240 V, 50 Hz/60 Hz			
	Allowable voltage fluctuation range	-15% to +10%, or 170 VAC to 264 VAC			
	Allowable frequency fluctuation range	±5% or 47.5 Hz to 63 Hz			
	Power supply capacity (kVA)	1.7	3	4.8	7.1
Thermal design	Thermal loss (W)	17.8	34.17	64.8	95.39
	Exhaust air volume (CFM)	10.5	10.5	15	15
Overvoltage category		OVCIII			
Pollution degree		PD2			
Degree of protection		IP20			
Weight (kg)		1.3			
Grid type		TN-S, TN-C, TN-C-S, TT/IT (non-angular grounding)			

Table 5–2 MD200 models and technical data (three-phase 380 V to 480 V)

Item	Specification				
MD200TXX(B)(-NC)	0.4	0.75	1.5	2.2	3.7
Applicable motor capacity (kW)	0.4	0.75	1.5	2.2	3.7

Item		Specification				
Output	Rated output current (A)	1.8	3.4	4.8	5.5	9.5
	Output voltage	Three-phase 0 VAC to 480 VAC				
	Maximum output frequency	599 Hz (changeable through parameter)				
	Carrier frequency	0.8 kHz to 12.0 kHz (automatically adjusted according to the load)				
	Overload capability	60s at 150% of the rated current				
Power supply	Rated input current (A)	2.6	4.5	5.5	6.5	11
	Rated voltage and frequency	AC: Three-phase 380 V, 50 Hz/60 Hz				
	Allowable voltage fluctuation range	-15% to +10%, or 323 VAC to 528 VAC				
	Allowable frequency fluctuation range	±5% or 47.5 Hz to 63 Hz				
	Power supply capacity (kVA)	1	1.5	3	4	5.9
Thermal design	Thermal loss (W)	17.54	24.98	44.93	58.58	108.91
	Exhaust air volume (CFM)	10.5	10.5	15	15	15
Overvoltage category		OVCIII				
Pollution degree		PD2				
Degree of protection		IP20				
Weight (kg)		1.4				
Grid type		TN-S, TN-C, TN-C-S, TT/IT (non-angular grounding)				

5.2.2 Technical Specifications

Item		Specification
Basic functions	Maximum frequency	V/f control: 0 Hz to 500 Hz SVC: 0-500 Hz (only for three-phase models)
	Carrier frequency	Two-phase models: 0.8 kHz to 11 kHz Three-phase models: 0.8 kHz to 12 kHz The carrier frequency is automatically adjusted based on the load.
	Input frequency resolution	Digital setting: 0.01 Hz; Analog setting: maximum frequency x 0.025%
	Control mode	V/f control SVC (only for three-phase models)
	Overload capability	60s at 150% the rated current; 2s at 180% the rated current
	Torque boost	Automatic boost; manual boost: 0.1 % to 30.0 %.
	V/f curve	Line; multi-point V/f curve
	Acceleration/ deceleration curve	Linear or dynamic S-curve Two groups of acceleration/deceleration time ranging from 0.0s to 6500.0s
	DC braking	DC braking frequency: 0.00 Hz to 10.00 Hz Braking time: 0.0s to 100.0s Braking current: 0% to 100%
	Jog control	Frequency range: 0.00 Hz to 50.00 Hz Acceleration/Deceleration time: 0.0s to 6500.0s
	Multi-reference operation	Up to eight multi-references are supported through the control terminal.
	Built-in PID	The PID function in the closed-loop control system can be implemented.
	Automatic voltage regulation (AVR)	When the mains voltage changes, the output voltage keeps constant automatically.
	Overvoltage/ Overcurrent stall control	The current and voltage are automatically restricted during operation to prevent frequent trips caused by overcurrent or overvoltage.
	Quick current limit	The function minimizes the occurrence of overcurrent to ensure normal operation of the AC drive.
	Power dip ride-through	The load regenerative energy compensates for any voltage reduction upon instantaneous power failure, allowing the drive to continue operating for a short period of time during power dip. In this case, the RUN indicator on the operating panel flashes.
	Quick current limit	The function helps avoid frequent overcurrent faults.
	Timing control	Time range: 0.0 minute to 6500.0 minutes
	Communication bus	Two field buses are supported, including RS-485 and CANlink (customizable).

Item		Specification
Running	Running command source	The supported running command source includes the operating panel, control terminal, and serial communication settings. You can switch over among these sources in various ways.
	Frequency source	Five frequency sources available, including Digital setting, analog voltage, analog current, pulse (DI4), and serial communication settings. You can switch over among these sources in various ways.
	Auxiliary frequency source	Five auxiliary frequency sources are provided. The auxiliary frequency can be used together with the main frequency to implement fine adjustment and synthesis of the frequency.
	Input terminal	Four DIs, one of which supports up to 20 kHz high-speed pulse input One AI that supports 0 to 10 V/0 to 20 mA input Note: The AI does not support current signals.
	Output terminal	One relay output terminal One AO that supports 0 to 10 V voltage output
	DI/DO terminal	One DI/DO terminal. The DI or DO function is selected by the DIP switch. For details, see *"Figure 3-2 " on page 29* . The DO common terminal is COM.
	Communication terminal	One RS-485 communication terminal. Customized CANlink communication is supported. Note: The -NC model does not support 485 communication.
Display and operation on the operating panel (format)	LED display	It displays parameters.
	Key lock and function selection	You can lock certain or all keys on the operating panel, or assign functions with limited availability range to some keys. This can prevent accidental operation.
	Protection	Protection against motor short circuit at power-on, input/output phase loss, overcurrent, overvoltage, undervoltage, overheat, and overload

Item		Specification
Environ ment	Operating location	Indoors without direct sunlight, dust, corrosive gas, combustible gas, oil mist, water vapor, drip, or salt
	Altitude	The maximum altitude is 3000 m. In places where the altitude exceeds 1000 m, the cooling effect deteriorates due to the thin air. In this case, the AC drive needs to be derated by 1% for every additional 100 m.
	Ambient temperature	-10°C to +50°C. 40°C to 50°C: derate by 1.5% for every additional 1°C.
	Storage/Ambient humidity	Less than 95% RH, non-condensing
	Vibration	• Application scenario: Tested according to IEC 60068-2-6 Vibration amplitude at 5 Hz to 8.4 Hz: 3.5 mm; acceleration at 8.4 Hz to 200 Hz: 1 g; 10 cycles /axis • Transportation scenario: Tested according to IEC 60068-2-64 Power spectrum density at 5 Hz to 100 Hz: 0.01 g^2/Hz; power spectrum density at 200 Hz: 0.001 g^2/Hz; Grms: 1.14 g
	Mechanical shock	Operation/Transportation scenario: Tested according to IEC 60068-2-27 Acceleration: 15 g; pulse width; 11 ms; 18 times in total in X/Y/Z-axis direction
	Storage temperature	-20°C to +60°C
	Degree of protection	IP20
Power supply grid	Applicable power supply grid	TN or TT

5.3 Selection of Peripheral Components

Table 5–3 Selection of fuses, contactors, and circuit breakers (single-phase 200 V to 240 V, compliant with UL certification)

Drive model	Bussmann fuse		ABB A series contactor	ABB Tmax series inverse time circuit breaker
	Rated current (A)	Model	Rated current (A)	Rated current (A)
MD200S0.4(B)(-NC)	12	JKS-12	9	10
MD200S0.75(B)(-NC)	20	JKS-20	12	16

Drive model	Bussmann fuse		ABB A series contactor	ABB Tmax series inverse time circuit breaker
	Rated current (A)	Model	Rated current (A)	Rated current (A)
MD200S1.5(B)(-NC)	35	JKS-32	25	32
MD200S2.2(B)(-NC)	50	JKS-50	32	40

Note

The recommended values in the preceding table are based on the following conditions.

1. The ambient temperature of the device is 40℃ without forced air cooling.

The altitude is 2000 m.

An individual drive is installed.

The current-carrying density of the conductor or copper busbar is 1.3 A/mm².

2. If conditions vary, select the model according to actual conditions.

Table 5–4 Selection of fuses, contactors, and circuit breakers (three-phase 380 V to 480 V, compliant with UL certification)

Drive model	Bussmann fuse		ABB A series contactor	ABB Tmax series inverse time circuit breaker
	Rated current (A)	Model	Rated current (A)	Rated current (A)
MD200T0.4(B)(-NC)	5	KTK-5	9	6
MD200T0.75(B)(-NC)	8	KTK-8		
MD200T1.5(B)(-NC)	10	KTK-10		10
MD200T2.2(B)(-NC)	12	KTK-12		
MD200T3.7(B)(-NC)	20	KTK-20	12	16

Note

The recommended values in the preceding table are based on the following conditions.

1. The ambient temperature of the device is 40℃ without forced air cooling.

The altitude is 2000 m.

An individual drive is installed.

The current-carrying density of the conductor or copper busbar is 1.3 A/mm².

2. If conditions vary, select the model according to actual conditions.

5.4 Selection of EMC Filters

5.4.1 Built-in Filter

The built-in EMC filter can meet the CE certifications and EN IEC 61800-3 C3 emission requirements.

5.4.2 External Filter

Optional external filters for single-phase models

With the external filter installed, single-phase models can meet the EN 61800-3 C2 emission requirement and the CE certification requirement.

CAUTION

Keep the connection cable between the filter and the AC drive as short as possible (shorter than 30 cm). Ensure that the filter and the AC drive are connected to the same grounding surface. The output grounding terminal of the filter must be connected to the input grounding terminal of the AC drive. The filter must be reliably grounded to ensure the filter effect.

Drive model	Power supply capacity (kVA)	Input current (A)	Recommended filter model (Schaffner)	Recommended filter model (Jianli)
Single-phase power supply: 220 V, 50/60 Hz; Range: -15% to +10%				
MD200S0.4(B)(-NC)	1.7	6.5	FN 2090-8-06	DL-10TH3
MD200S0.75(B)(-NC)	3.0	11.0	FN 2090-12-06	DL-20TH1

Drive model	Power supply capacity (kVA)	Input current (A)	Recommended filter model (Schaffner)	Recommended filter model (Jianli)
MD200S1.5(B)(-NC)	4.8	18.0	FN 2090-20-08	DL-20TH1
MD200S2.2(B)(-NC)	7.1	27.0	FN 2090-30-08	DL-30TH1

Note

It is recommended to select a model with the performance not lower than the recommended value.

- **Appearance**

Schaffner series filter

Jianli series filter

- **Mounting dimensions**
  - Dimensions of the Schaffner series filters

    Outline dimensions of FN 2090-8-06 and FN 2090-12-06 models

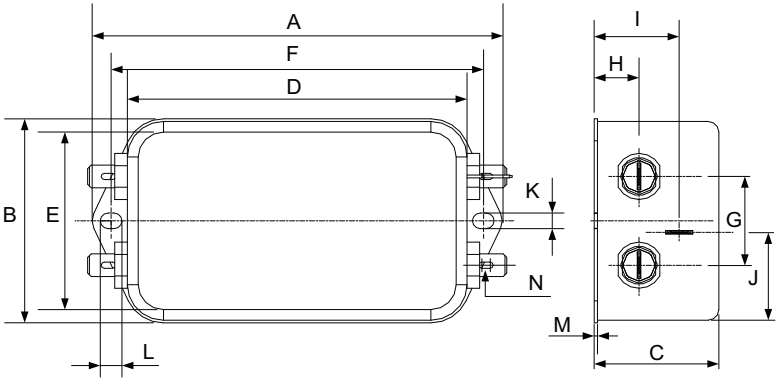

Outline dimensions of FN 2090-20-08 and FN 2090-30-08 models

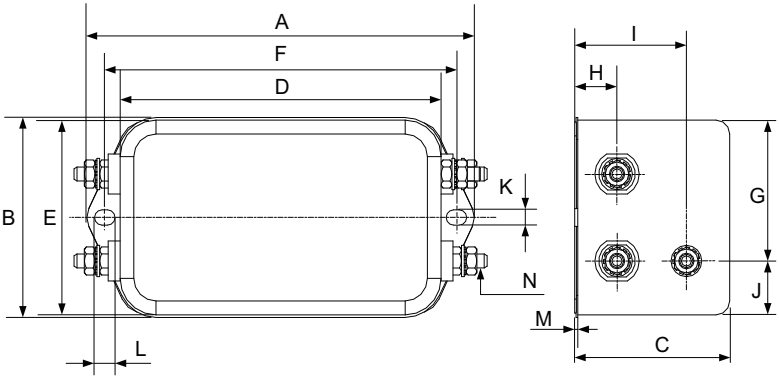

Table 5–5 Schaffner filter dimensions (unit: mm)

Reactor model	A	B	C	D	E	F	G	H	I	J	K	L	M	N
FN 2090-8-06	113.5	57.5	45.4	94	56	103	25	12.4	32.4	15.5	4.4	6	0.9	6.3 x 0.8
FN 2090-12-06	113.5	57.5	45.4	94	56	103	25	12.4	32.4	15.5	4.4	6	0.9	6.3 x 0.8
FN 2090-20-08	113.5	57.5	45.4	94	56	103	25	12.4	32.4	15.5	4.4	6	0.9	M4
FN 2090-30-08	113.5	57.5	45.4	94	56	103	25	12.4	32.4	15.5	4.4	6	0.9	M4

- Dimensions of Jianli series filters

  Outline dimensions of DL-10TH3 (in mm)

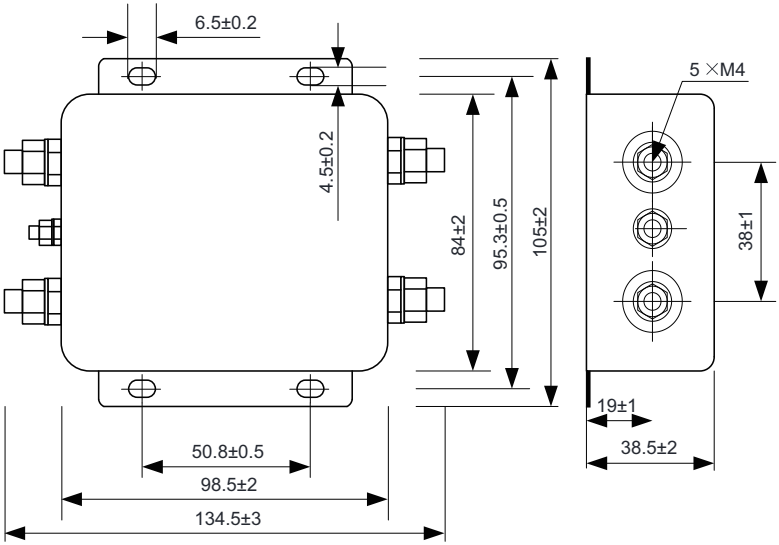

Outline dimensions of DL-20TH1 and DL-30TH1 models

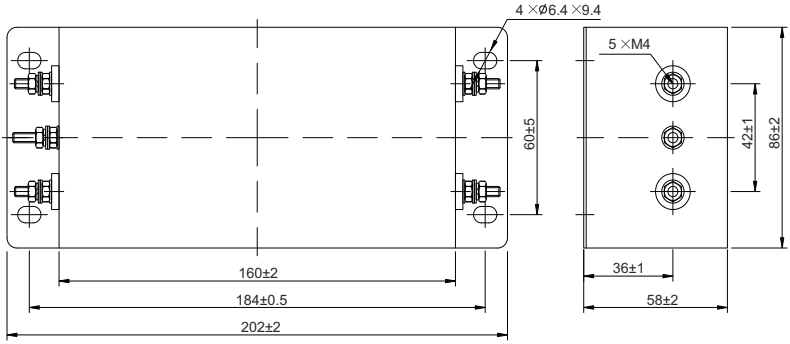

Optional external filters for three-phase models

With the external filter installed, three-phase models can meet the EN 61800-3 C2 emission requirement and the CE certification requirement.

CAUTION

Keep the connection cable between the filter and the AC drive as short as possible (shorter than 30 cm). Ensure that the filter and the AC drive are connected to the same grounding surface. The output grounding terminal of the filter must be connected to the input grounding terminal of the AC drive. The filter must be reliably grounded to ensure the filter effect.

Drive model	Power supply capacity (kVA)	Input current (A)	Recommended filter model (Schaffner)	Recommended filter model (Jianli)
Three-phase power supply: 380 V, 50/60 Hz; Range: -15% to +10%				
MD200T0.4B(-NC)	1.0	2.6	FN3258-7-45	DL-5EBK5
MD200T0.75B(-NC)	1.5	4.5	FN3258-7-45	DL-5EBK5
MD200T1.5B(-NC)	3.0	5.5	FN3258-7-45	DL-10EBK5
MD200T2.2B(-NC)	4.0	6.5	FN3258-7-45	DL-10EBK5
MD200T3.7B(-NC)	5.9	11.0	FN3258-16-45	DL-16EBK5

Note

It is recommended to select a model with the performance not lower than the recommended value.

- Appearance

Schaffner series filter

Jianli series filter

- Mounting dimensions
  - Dimensions of the Schaffner series filters

Table 5–6 Schaffner filter dimensions (unit: mm)

Reactor model	A	B	C	D	E	F	G	H	I	J	K	L
FN3258-7-45	190	40	70	160	180	20	4.5	1	22	M5	20	29.5
FN3258-16-45	250	45	70	220	235	25	5.4	1	22	M5	22.5	29.5

  - Dimensions of Jianli series filters

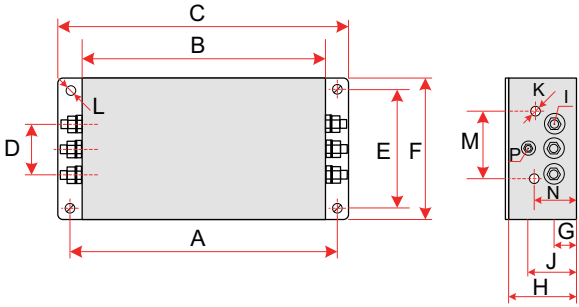

Table 5–7 Dimensions (unit: mm) of Jianli series filter

Reactor model	A	B	C	D	E	F	G	H	I	J	K	M	N	P	L
DL-5EBK5	184	160	202	42	60	86	18	58	M4	38	-	-	-	M4	6.9 x 9.4
DL-10EBK5															
DL-16EBK5															

5.5 Selection of AC Input Reactors

An AC reactor must be connected to the input side of the AC drive in series to reduce the current harmonics.

For the single-phase models, the inductance of the AC reactor must be higher than 8 mH to meet requirements of IEC 61000-3-12.

For the three-phase models, the inductance of the AC reactor must be higher than 5 mH to meet requirements of IEC 61000-3-12.

5.6 Selection of dv/dt Output Reactors

When the motor output cable is longer than 100 m, reflected voltage is generated on the motor side on the rising edge of the pulse wave output by the AC drive. This is because the characteristic impedance of the motor does not match with that of the cable. The reflected voltage is added on the high voltage square wave pulse, bringing impact on the stator winding insulation. High-frequency harmonics brings greater heat loss and continuous impact of partial discharge pulses, causing a quick motor insulation failure under the PWM pulse voltage. Therefore, when the motor cable is longer than 100 m, a dv/dt reactor must be installed on the output side.

- Recommended output reactor models

Drive model	Power supply capacity kVA	Output current A	Recommended dv/dt output reactor model (SCHAFFNER)	Output reactor inductance mH	Applicable cable length after dv/dt reactors are installed (m)
Single-phase power supply: 220 V, 50/60 Hz; Range: -15% to +10%					
MD200S0.4(B)(-NC)	1.7	2.6	RWK 305-4-KL	1.47	150
MD200S0.75(B)(-NC)	3.0	4.6	RWK 305-7.8-KL	0.754	150
MD200S1.5(B)(-NC)	4.8	8.0	RWK 305-10-KL	0.588	150
MD200S2.2(B)(-NC)	7.1	11.0	RWK 305-14-KL	0.42	150
Three-phase power supply: 380 V, 50/60 Hz; Range: -15% to +10%					
MD200T0.4B(-NC)	1.0	1.8	RWK 305-7.8-KL	0.754	150
MD200T0.75B(-NC)	1.5	3.4	RWK 305-7.8-KL	0.754	150
MD200T1.5B(-NC)	3.0	4.8	RWK 305-7.8-KL	0.754	150
MD200T2.2B(-NC)	4.0	5.5	RWK 305-7.8-KL	0.754	150
MD200T3.7B(-NC)	5.9	9.5	RWK 305-14-KL	0.42	150

Note

It is recommended to select a model with the performance not lower than the recommended value.

- Mounting dimensions of the dv/dt output reactor (unit: mm)

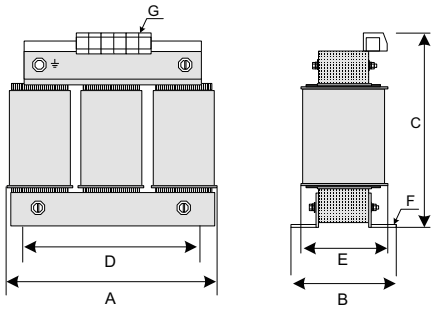

Reactor model	A	B	C	D	E	F	G
RWK 305-4-KL	100	Max. 60	Max. 115	56	34	4.8 x 9	2.5 mm^2
RWK 305-7.8-KL	100	Max. 60	Max. 115	56	34	4.8 x 9	2.5 mm^2
RWK 305-10-KL	100	Max. 70	Max. 115	56	43	4.8 x 9	2.5 mm^2
RWK 305-14-KL	125	Max. 70	Max. 135	100	45	5 x 8	2.5 mm^2

5.7 Selection of Cables and Tightening Torque

Main circuit

Table 5–8 Cable selection (single-phase 200 V to 240 V)

Drive model	Rated input current (A)	Rated output current (A)	L1, L2, PE		U, V, W		Width (mm) of L1, L2, and PE terminals	Drive terminal width (mm)	Screw	Tightening torque (N•m)
			Cable (mm^2)<1>	Terminal model	Cable (mm^2)<1>	Terminal model				
MD200S0.4(B)(-NC)	6.5	2.5	3x0.75	TVS1.25-4S	3x0.75	TVS1.25-4S	6.4	8.2	M4	1.2
MD200S0.75(B)(-NC)	11	4.6	3x1.5	TVS1.25-4S	3x0.75	TVS1.25-4S	6.4			
MD200S1.5(B)(-NC)	18	8	3x2.5	TVS2.0-4S	3x1.5	TVS1.25-4S	6.2			
MD200S2.2(B)(-NC)	27	11	3x4	TVS3.5-4S	3x2.5	TVS2-4S	8			

Note

<1>: Applicable to the standards in China. 3 x 0.75 indicates one three-conductor cable with a cross sectional area of 0.75 mm²; 3 x 1.5 indicates one three-conductor cables with a cross sectional area of 1.5 mm². The preceding recommended terminals are TVS series of Suzhou Yuanli.

Note: 1. Observe national or regional regulations during selection. The recommended values in the preceding table are based on the following conditions:

- Cables with PVC insulation and copper conductor
- Cables with the maximum surface temperature not exceeding 70°C at the ambient temperature not exceeding 40°C (Note: When the ambient temperature exceeds 40°C, contact Inovance.)
- Cable installation type E applied (See IEC60204-1.)

2. If conditions vary, select the model according to actual conditions.

Table 5–9 Cable selection (single-phase 200 V to 240 V) (with UL certification)

Drive model	Rated input current (A)	Rated output current (A)	L1, L2, PE		U, V, W		Width (mm) of L1, L2, and PE terminals	Drive terminal width (mm)	Screw	Tightening torque (N•m)
			Cable (AWG/Kcmil)<2>	Terminal model	Cable (AWG/Kcmil)<2>	Terminal model				
MD200S0.4(B)(-NC)	6.5	2.5	14	SVS2-4	14	SVS2-4	6.4	8.2	M4	1.2
MD200S0.75(B)(-NC)	11	4.6	12	SVS3-4			6.4			
MD200S1.5(B)(-NC)	18	8	10	SNSS5-4			7.2			
MD200S2.2(B)(-NC)*	27	11	10	SNSS5-4	12	SVS3-4	7.2			

Note

<2>: Applicable to AWG standards; 14 represents 14AWG and 12 represents 12AWG. The preceding recommended terminals are SV series terminals from KST.

The preceding recommended terminals are SV series terminals from KST.

Note: 1. Observe national or regional regulations during selection. The recommended values in the preceding table are based on the following conditions:

- Cables with PVC insulation and copper conductor
- Cables with the maximum surface temperature not exceeding 75°C at the ambient temperature not exceeding 40°C (Note: When the ambient temperature exceeds 40°C, contact Inovance.)
- Cable installation type E applied (See IEC60204-1.)

2. The recommended cables must meet requirements for 125% overload.

3. Cables with * (L1, L2, PE) do not meet requirements for 125% overload of UL.

4. If the conditions vary, select the cable model according to actual conditions.

Table 5–10 Cable selection (three-phase 380 V to 480 V)

Drive model	Rated input current (A)	Rated output current (A)	R, S, T/U, V, W		PE		Width (mm) of R,S, T/U, V, W terminals	Drive terminal width (mm)	Screw	Tightening torque (N•m)
			Cable (mm^2)<1>	Terminal model	Cable (mm^2)<1>	Terminal model				
MD200T0.4(B)(-NC)	2.6	1.8	3x0.75	TV S1.25-4S	3x0.75	TV S1.25-4S	6.4	8.2	M4	1.2
MD200T0.75(B)(-NC)	4.5	3.4								
MD200T1.5(B)(-NC)	5.5	4.8								
MD200T2.2(B)(-NC)	6.5	5.5								
MD200T3.7(B)(-NC)	11	9.5	3x1.5		3x1.5					

Note

<1>: Applicable to the standards in China. 3 x 0.75 indicates one three-conductor cable with a cross sectional area of 0.75 mm²; 3 x 1.5 indicates one three-conductor cables with a cross sectional area of 1.5 mm².

The preceding recommended terminals are the TVS series of Suzhou Yuanli.

Note: 1. Observe national or regional regulations during selection. The recommended values in the preceding table are based on the following conditions:

- Cables with PVC insulation and copper conductor
- Cables with the maximum surface temperature not exceeding 70°C at the ambient temperature not exceeding 40°C (Note: When the ambient temperature exceeds 40°C, contact Inovance.)
- Cable installation type E applied (See IEC60204-1.)

2. If conditions vary, select the model according to actual conditions.

Table 5–11 Cable selection (three-phase 380 V to 480 V, with UL certification)

Drive model	Rated input current (A)	Rated output current (A)	R, S, T/U, V, W		PE		Width (mm) of R,S, T/U, V, W terminals	Drive terminal width (mm)	Screw	Tightening torque (N•m)
			Cable (AWG/Kcmil)<2>	Terminal model	Cable (AWG/Kcmil)<2>	Terminal model				
MD200T0.4(B)(-NC)	2.6	1.8	14	SVS2-4	14	SVS2-4	6.4	8.2	M4	1.2
MD200T0.75(B)(-NC)	4.5	3.4								
MD200T1.5(B)(-NC)	5.5	4.8								
MD200T2.2(B)(-NC)	6.5	5.5								
MD200T3.7(B)(-NC)	11	9.5	12	SVS3-4	12	SVS3-4	7.2			

Note

<2>: Applicable to AWG standards; 14 represents 14AWG and 12 represents 12AWG.

The preceding recommended terminals are SVS series terminals of KST.

Note: 1. Observe national or regional regulations during selection. The recommended values in the preceding table are based on the following conditions:

- Cables with PVC insulation and copper conductor
- Cables with the maximum surface temperature not exceeding 75°C at the ambient temperature not exceeding 40°C (Note: When the ambient temperature exceeds 40°C, contact Inovance.)
- Cable installation type E applied (See IEC60204-1.)

2. The recommended cables must meet requirements for 125% overload.

3. If conditions vary, select the model according to actual conditions.

Control circuit

Recommended UL cable (AWG)	Screw	Tightening torque (N•m)
22 to 18	M3	0.4

5.8 Selection of Options

Selection of external operating panel

Table 5–12 Selection of external operating panel

Name	Option model	Function	Remarks
External operating panel	MDKE8	External LED operating panel	Applicable to all models except MD200-CAN models
Cable of the external operating panel	MDCAB	Three-meter cable for the external operating panel	
	MDCAB-1.5	1.5-meter cable for the external operating panel	
DIN guide rail	MD200-DGJ1	DIN guide rail	All models
	Product code: 01040023		

Braking resistor protection

In applications where a braking resistor is installed, it is recommended to use a resistor with a temperature switch to ensure safety and avoid overtemperature and burning of the braking resistor. Connect the temperature switch output to the electromagnetic

contactor control circuit on the front end of the AC drive (as shown in the following figure) to implement the interlock protection function. When the resistor overheats, a tripping fault occurs, preventing the resistor from being burned.

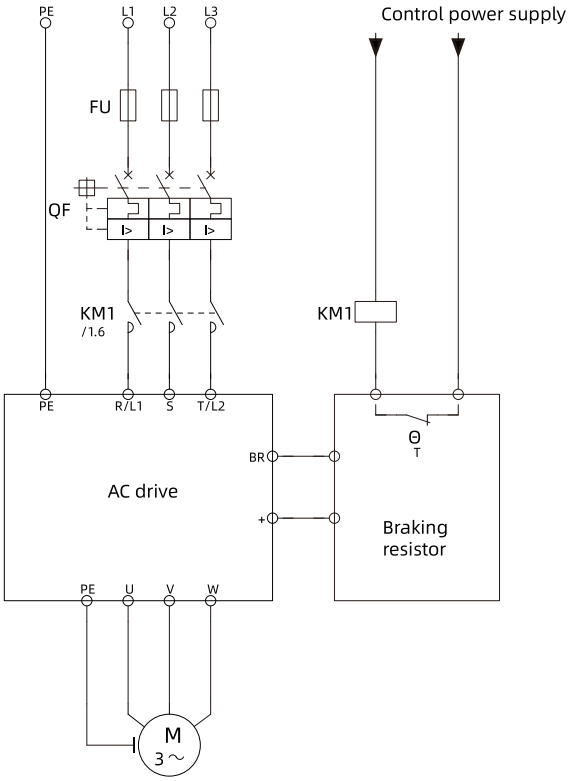

Braking unit model

Table 5–13 Model selection of braking components

Drive model	Applicable motor (kW)	Recommended braking resistor specification (125% of braking torque, ED: 10%, max.: 10s)	Quantity of braking resistors	Minimum braking resistor (Ω)
MD200S2.2B(-NC)	2.2	70 Ω/350 W	1	52
MD200S1.5B(-NC)	1.5	100 Ω/250 W	1	52
MD200S0.75B(-NC)	0.75	170 Ω/150 W	1	104
MD200S0.4B(-NC)	0.4	350 Ω/100 W	1	104
MD200T3.7B(-NC)	3.7	150 Ω/600 W	1	104
MD200T2.2B(-NC)	2.2	250 Ω/350 W	1	104

Drive model	Applicable motor (kW)	Recommended braking resistor specification (125% of braking torque, ED: 10%, max.: 10s)	Quantity of braking resistors	Minimum braking resistor (Ω)
MD200T1.5B(-NC)	1.5	380 Ω/250 W	1	104
MD200T0.75B(-NC)	0.75	800 Ω/150 W	1	250
MD200T0.4B(-NC)	0.4	1450 Ω/100 W	1	250

6 Function Application

6.1 Operation Command Setting

6.1.1 Running Command Setting Source

Operation commands are used to control start, stop, forward run, reverse run, and jog of the AC drive. Three operation command sources are available: operating panel, terminals, and communication. Select the operation command input mode through F0-02.

Parameter code	Parameter name	Default	Value range	Description
F0-02	Command source	0	0: Operating panel 1: Terminal 2: Communication	This parameter is used to select the input channel of the AC drive control commands, such as run, stop, forward run, reverse run and jog operation. 0: Operating panel. Operation commands are input by using the RUN, STOP/RES, and MF.K keys on the operating panel. It is applicable to initial commissioning. 1: Terminal. Operation commands are input through the DIs of the AC drive. The DI can be assigned with different functions such as start/stop, forward/reverse run, jog, two-wire/three-wire mode, and multi-reference (independent from each other). This mode is suitable for most applications. 2: Communication. Operation commands are input through remote communication with the communication address of 0x7310 or 0x1000 in general. The AC drive must be equipped with a communication card to communicate with the host controller. The communication address for Modbus RTU and CANlink communication is 0x2000 and that for CANopen communication is 0x2073-12. The related parameter is U3-17.

6.1.2 Setting Operating Commands Through the Operating Panel

Set F0-02 to 0 and use RUN and STOP RES on the operating panel to start and stop the AC drive.

- Press RUN to start the AC drive. The RUN indicator becomes ON.
- When the AC drive is running, press STOP RES to stop the AC drive (the RUN indicator is off).

6.1.3 Setting Running Commands Through Terminals

Set F0-02 to 1 to use terminals to start and stop the AC drive.

F4-11 is used to set the terminal control mode. The AC drive supports four terminal control modes: two-wire mode 1, two-wire mode 2, three-wire mode 1, and three-wire mode 2.

Parameter code	Parameter name	Default	Value range	Description
F4-11	Terminal control mode	0	0: Two-wire mode 1 1: Two-wire mode 2 2: Three-wire mode 1 3: Three-wire mode 2	This parameter indicates the mode in which the AC drive is controlled through external terminals.

You can use any multi-functional input terminals, including DI1 to DI4 and DI/DO (applicable only to MD200XXX-NC models), as external input terminals. Set parameters F4-00 to F4-04 to select functions for DI1 to DI4 and DI/DO. For details about function definitions, see F4-00 (DI1) to F4-04 (DI/DO) descriptions in *" Parameter List" on page 118*.

Two-wire mode 1

Two-wire mode 1: Set F4-11 to 0. This is the most commonly used two-wire mode.

For example, the DI1 is assigned with the forward run function, and the DI2 is assigned with the reverse run function. Connect the forward run switch to the DI1 and the reverse run switch to the DI2.

Parameter code	Parameter name	Value	Description
F4-11	Terminal control mode	0	Two-wire mode 1
F4-00	DI1 function selection	1	Forward run (FWD)
F4-01	DI2 function selection	2	Reverse run (REV)

In this mode, when the control switch SW1 is closed and the control switch SW2 is open, the motor runs in the forward direction. When SW1 is open and SW2 is closed, the motor runs in the reverse direction. When both SW1 and SW2 are open or closed, the motor does not run. See the following figure for details.

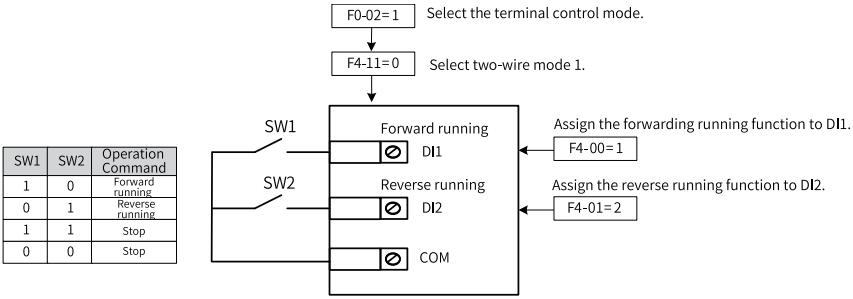

Figure 6-1 Wiring and parameter settings for two-wire mode 1

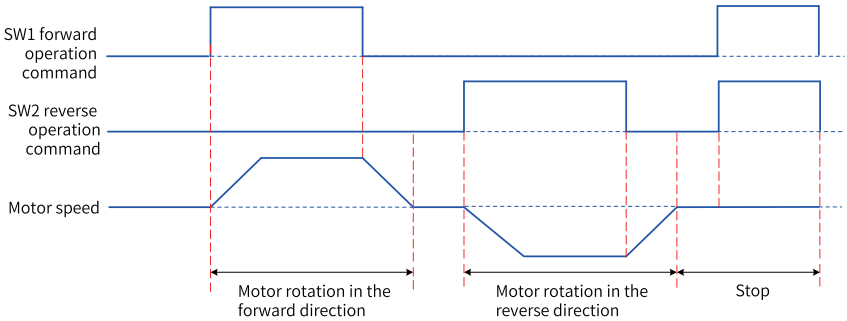

Figure 6-2 Time sequence (normal) for two-wire mode 1

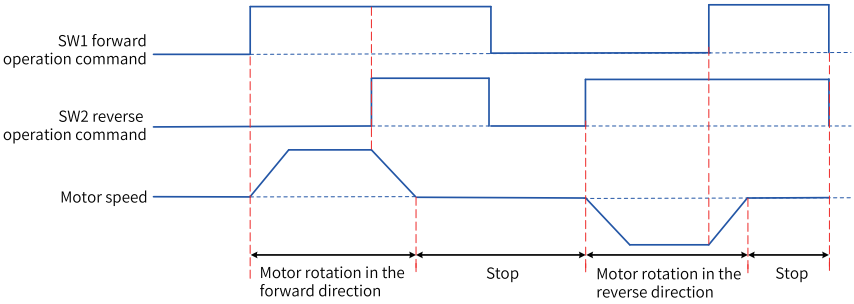

Figure 6-3 Time sequence (abnormal) for two-wire mode 1

Two-wire mode 2

For example, the DI1 is assigned with the running command function, and the DI2 is assigned with the forward/reverse running function. The related parameters are as follows.

Parameter code	Parameter name	Value	Description
F4-11	Terminal control mode	1	Two-wire mode 2
F4-00	DI1 function selection	1	Running command
F4-01	DI2 function selection	2	Forward/reverse running direction

In this mode, when SW1 is closed, the motor runs. When SW2 is open, the motor runs in the forward direction. When SW2 is closed, the motor runs in the reverse direction. When SW1 is open, the motor does not run no matter whether SW2 is open. See the following figure for details.

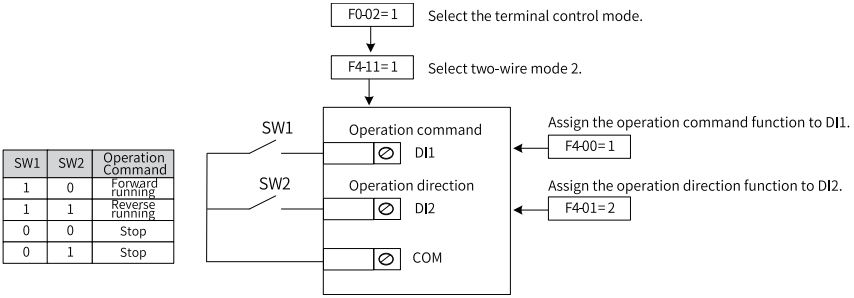

SW1	SW2	Operation Command
1	0	Forward running
1	1	Reverse running
0	0	Stop
0	1	Stop

Figure 6-4 Wiring and parameter settings for two-wire mode 2

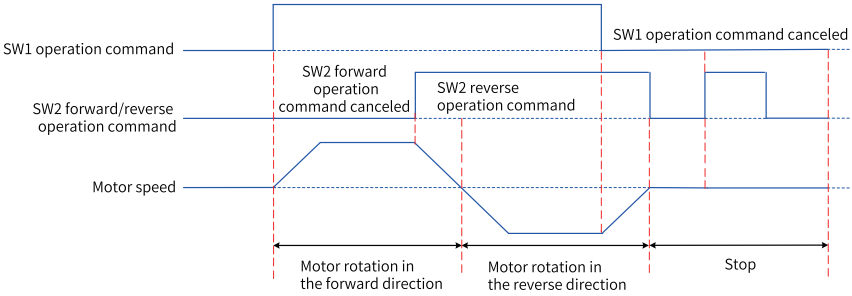

Figure 6-5 Time sequence for two-wire mode 2

Three-wire mode 1

For example, the DI3 is assigned with the three-wire operation control function, the DI1 is assigned with the forward run function, and the DI2 is assigned with the reverse run function. In this mode, start and stop of the AC drive must be controlled by keys on the AC drive. Connect the start/stop key to the DI3, the forward run key to the DI1, and the reverse run key to the DI2. The related parameters are as follows.

Parameter code	Parameter name	Value	Description
F4-11	Terminal control mode	2	Three-wire mode 1
F4-00	DI1 function selection	1	Forward run (FWD)
F4-01	DI2 function selection	2	Reverse run (REV)
F4-02	DI3 function selection	3	Three-wire mode

SW3 is a normally-closed control switch and SW1 and SW2 are normally-open control switches. When SW3 is closed, the motor runs in the forward direction if SW1 is pressed, and in the reverse direction if SW2 is pressed. The motor stops immediately after SW3 is open. SW3 must remain closed during normal start and running. A signal from SW1 or SW2 takes effect once SW1 or SW2 is closed.

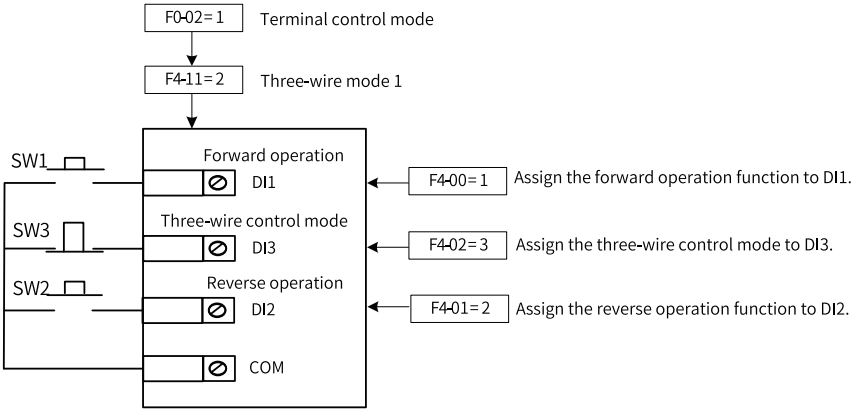

Figure 6-6 Wiring and parameter settings for three-wire mode 1

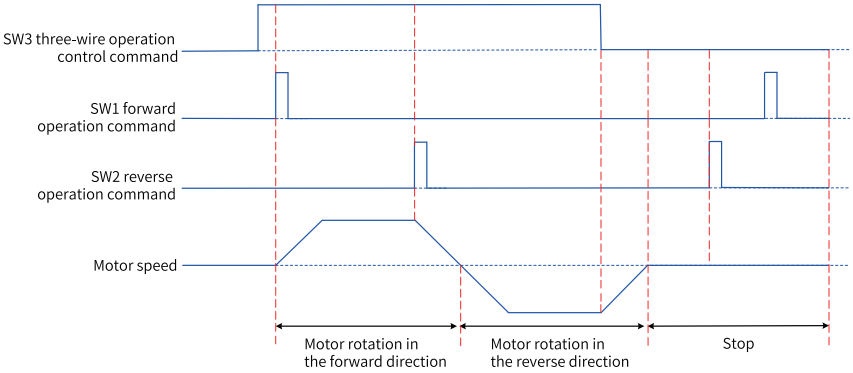

Figure 6-7 Time sequence for three-wire mode 1

Three-wire mode 2

For example, the DI3 is assigned with the three-wire operation control function, the DI1 is assigned with the running command function, and the DI2 is assigned with the forward/reverse running function. Connect the start/stop key to the DI3, the running enabling key to the DI1, and the forward/reverse run key to the DI2. The related parameters are as follows.

Parameter code	Parameter name	Value	Description
F4-11	Terminal control mode	3	Three-wire mode 2
F4-00	DI1 function selection	1	Running command

Parameter code	Parameter name	Value	Description
F4-01	DI2 function selection	2	Forward/reverse running direction
F4-02	DI3 function selection	3	Three-wire mode

When SW3 is closed and SW1 is pressed, the motor runs. If SW2 is open, the motor runs in the forward direction. If SW2 is closed, the motor runs in the reverse direction. The motor stops immediately after SW3 is open. SW3 must remain closed during normal start and running. A signal from SW1 takes effect once SW1 is closed.

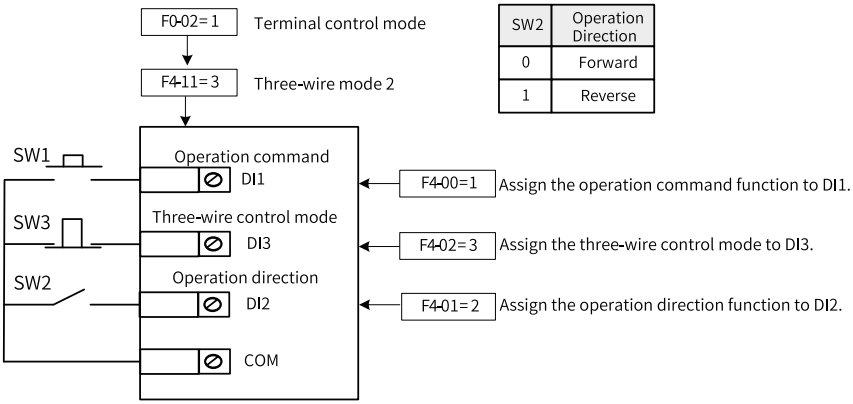

Figure 6-8 Wiring and parameter settings for three-wire mode 2

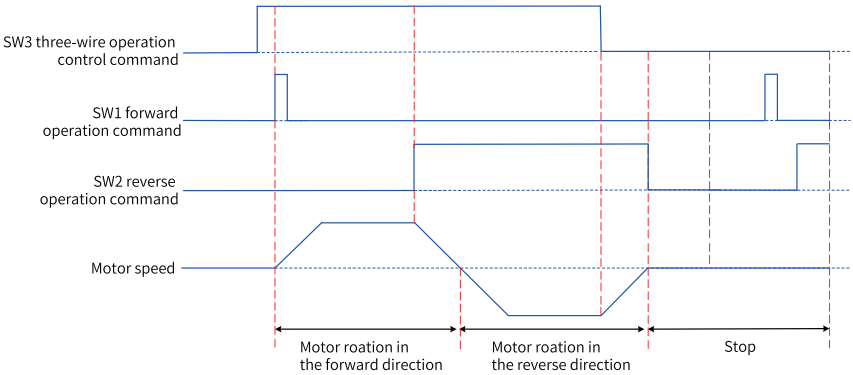

Figure 6-9 Three-wire mode 2 sequence

6.1.4 Setting Running Commands Through Communication

You can set F0-02 to 2 to select communication as the command source to start or stop the AC drive.

The AC drive supports the Modbus protocol to communicate with the host controller.

When the AC drive is controlled through communication, the host controller must send a write command to the AC drive. The following section describes the process of sending running commands through communication.

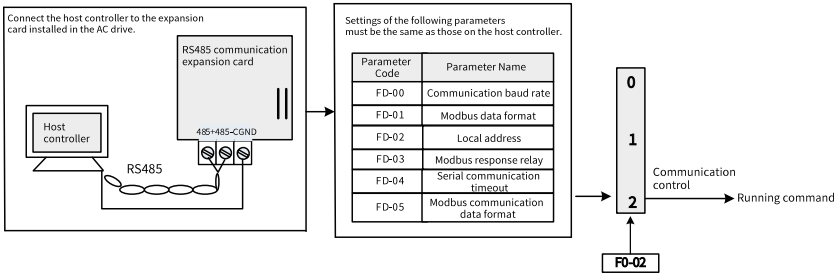

Figure 6-10 Sending running commands through communication

To make the AC drive run in the reverse direction, the host controller sends the write command 01 06 20 00 00 02 03 CB. The following table describes the definition of each byte. The command is in the hexadecimal format. See *" Communication" on page 101* for other communication addresses and control commands.

Command	Description
01H (settable)	AC drive address
06H	Write command
2000H	Control command communication address
02H (reverse run)	Control command
03CBH	CRC

The following table describes the commands from the master and slave.

Command from the master		Response from the slave	
ADDR	01H	ADDR	01H
CMD	06H	CMD	06H
Parameter address (H)	20H	Parameter address (H)	20H
Parameter address (L)	00H	Parameter address (L)	00H
Data content (H)	00H	Data content (H)	00H
Data content (L)	02H	Data content (L)	02H
CRC (H)	03H	CRC (H)	03H
CRC (L)	CBH	CRC (L)	CBH

6.2 Setting the Main Frequency Through PID

PID control, which is a common process control method, calculates the proportion, integral, and differential of the difference between feedback signals and target signals of the controlled variable, and adjusts the output frequency of the AC drive accordingly. This method finally creates a closed-loop system to stabilize the controlled variable at the target value. The PID control output is used as the running frequency. The PID control is generally used for field process closed-loop control, such as constant pressure closed-loop control and constant tension closed-loop control.

- Proportional gain Kp: When there is a deviation between the PID input and output, the PID regulator adjusts the output to reduce the deviation of the controlled variable. The deviation reduction speed depends on the proportionality coefficient Kp. A greater Kp value means faster deviation reduction but causes oscillation, especially in the case of long hysteresis. A smaller Kp value means lower probability of oscillation but leads to slow adjustment. The value 100.0 indicates that when the deviation between PID feedback and PID reference is 100.0%, the adjustment amplitude of the PID regulator on the output frequency reference is the maximum frequency.
- Integral time Ti: It determines the intensity of integral adjustment by the PID regulator. Shorter integral time indicates greater adjustment intensity. The integral time means that when the deviation between the PID feedback and the PID reference is 100.0%, the integral regulator performs continuous adjustment for the integral time to reach the maximum frequency.
- Differential time Td: Td determines the strength of deviation change rate adjustment by the PID regulator. The longer the differential time, the greater the regulation intensity. The differential time refers to the period during which the feedback value changes by 100.0%. The differential regulator adjusts the output frequency at an amplitude of the maximum frequency.

Example

Step 1: Set F0-03 or F0-04 to 8 to select PID as the main or auxiliary frequency input source.

Step 2: Set FA-00 to select the source of PID target reference. When FA-00 is set to 0, set FA-01 (PID digital setting). The value 100% of this parameter corresponds to the maximum PID feedback.

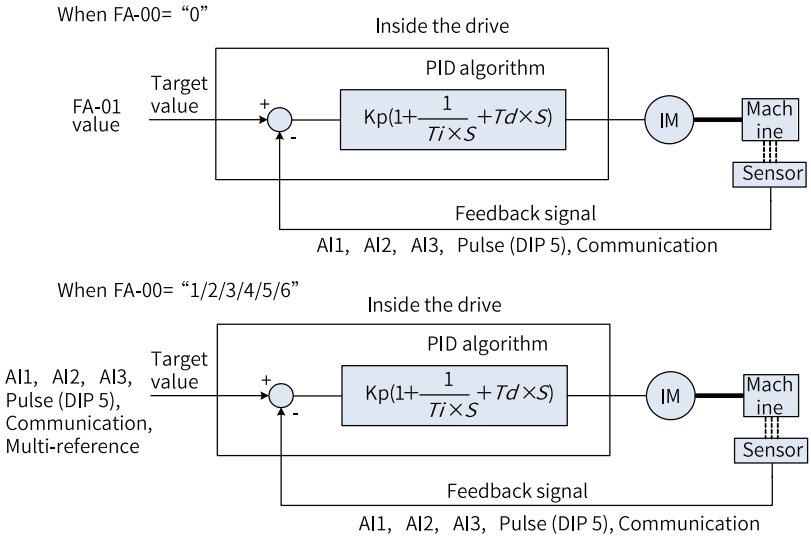

Figure 6-11 Process PID control

Step 3: Set FA-02 to select the PID feedback source.

Step 4: Set FA-03 to select the PID action direction.

The following figure shows the logic of parameter settings for process PID control.

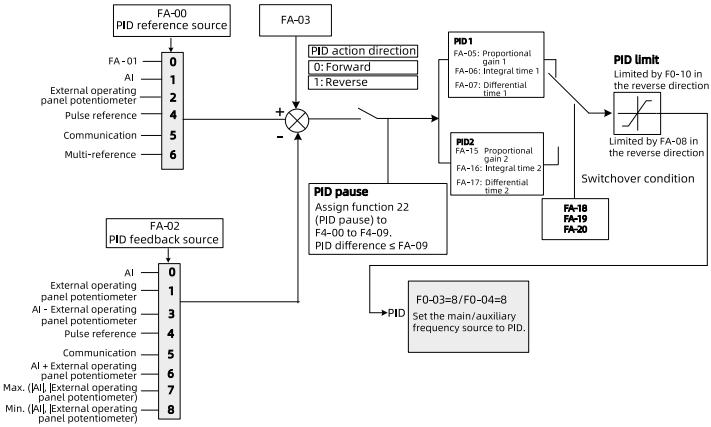

Figure 6-12 Logic of parameter settings for process PID control

The upper limit, lower limit, and range of the output frequency are described as follows when PID (or main frequency+PID) is used as the main frequency source.

- When the reverse cut-off frequency is 0 or reverse running is inhibited (that is, under one of the following three conditions):
  (1) FA-08 = 0, F8-13 = 0; (2) FA-08 = 0, F8-13 = 1; (3) FA-08 ≠ 0, F8-13 = 1

  Output upper limit = Frequency upper limit

  Output lower limit = Frequency lower limit

  Output range = Frequency lower limit to frequency upper limit (F0-14 to F0-12)

- When the reverse cut-off frequency is not 0 and reverse running is allowed (FA-08 ≠ 0, F8-13 = 0):
  Output upper limit = Frequency upper limit; Output lower limit = -Reverse cut-off frequency

  Output range = -Reverse cut-off frequency to +frequency upper limit (-FA-08 to +F0-12)

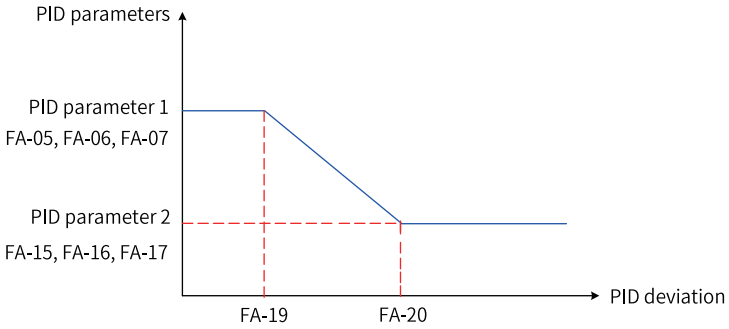

Figure 6-13 PID parameter switchover

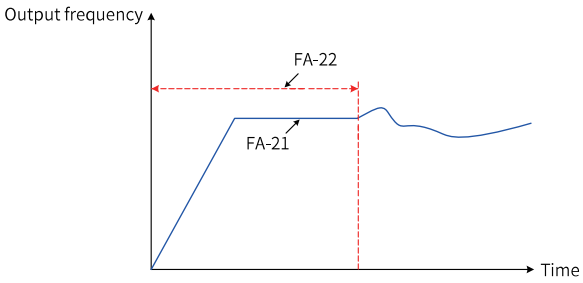

Figure 6-14 PID initial value function

6.3 Control Performance

6.3.1 Output Current (Torque) Limit

During acceleration, operation at constant speed, or deceleration, if the current exceeds the overcurrent stall action current (default: 150%, indicating 1.5 times the rated AC drive current), the overcurrent stall acts. In this case, the output frequency decreases until the current drops below the overcurrent stall action current. Then, the output frequency increases to the target frequency. Therefore, the acceleration time is prolonged. If the actual acceleration time cannot meet your requirement, increase the value of overcurrent stall action current (F3-18) accordingly.

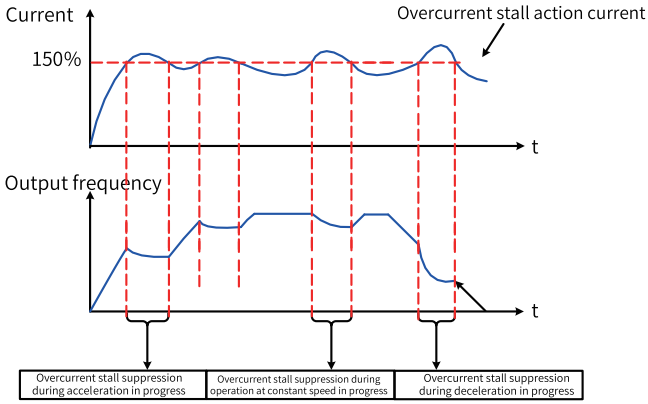

Figure 6-15 Overcurrent stall action

Table 6–1 Related parameters

Parameter code	Parameter name	Default	Value range	Description
F3-18	Overcurrent stall action current	150%	50% to 200%	When the motor current reaches this value, the AC drive activates the overcurrent stall function. The default value is 150%, corresponding to 1.5 times the rated current of the AC drive.
F3-19	Overcurrent stall suppression	1	0: Disable 1: Enable	This parameter determines whether to enable overcurrent stall suppression in the V/f mode.

Parameter code	Parameter name	Default	Value range	Description
F3-20	Overcurrent stall suppression gain	20	0 to 100	When the current exceeds the overcurrent stall action current, the overcurrent stall suppression function is triggered, and the output frequency decreases. When the current falls below the overcurrent stall threshold, the output frequency increases to the target frequency, and the actual acceleration time prolongs automatically. A larger parameter value indicates better suppression effect.
F3-21	Compensation coefficient for overcurrent stall action current at multiplied rated frequency	50%	50% to 200%	This parameter reduces the overcurrent stall action current at high speed. It is invalid when set to 50%. The recommended value for F3-18 in the flux weakening area is 100%.

In the high frequency area, the motor drive current is small. At the same stall current, the motor speed drops faster when the motor runs below the rated frequency than when the motor runs above the rated frequency. To improve motor running characteristic, you can lower down the stall action current when the motor runs above the rated frequency. The method improves acceleration performance and prevents the motor from stall in the application where high running frequency and several times the field weakening are required and load inertia is large, such as centrifuges.

Overcurrent stall action current when the frequency is above the rated frequency = (fs/fn) x k x LimitCur

fs: running frequency; fn: rated motor frequency; k: compensation coefficient for overcurrent stall action current at multiplied rated frequency (F3-21); LimitCur: overcurrent stall action current (F3-18)

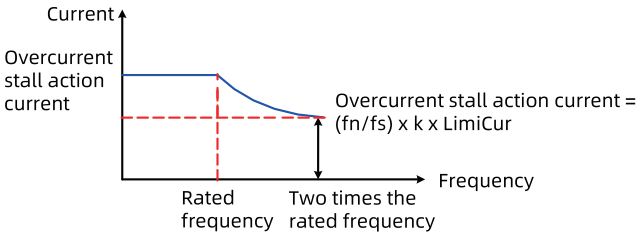

Figure 6-16 Overcurrent stall action at multiplied rated frequency

Note

For high-power motors with carrier frequency below 2 kHz, lower the overcurrent stall action current. Otherwise, the pulse-by-pulse current limit function is enabled before the overcurrent stall prevention function as ripple current increases, resulting in insufficient torque output.

6.3.2 Overvoltage Stall Suppression

When the bus voltage rises above the value of F3-22 (overvoltage stall action voltage), the motor enters the generating state (motor speed > output frequency). In this case, the overvoltage stall function is activated, which adjusts the output frequency and extends the deceleration time to prevent trip. If the actual deceleration time cannot satisfy the requirement, increase the over-excitation gain.

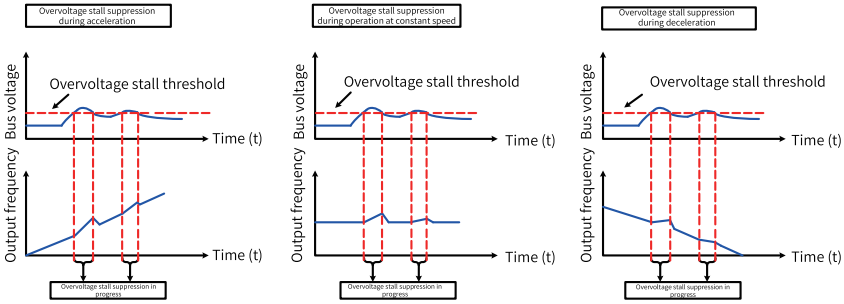

Figure 6-17 Overvoltage stall suppression action

Parameter code	Parameter name	Default	Value range	Description
F3-22	Overvoltage stall action voltage	770.0 V	650.0 V to 800.0 V	When the bus voltage reaches the value of this parameter, the AC drive activates overvoltage stall protection.
F3-23	Overvoltage stall suppression	1	0: Disable 1: Enable	0: Disable 1: Enable (default) The function of F3-23 is the same as that of F9-04. When a braking resistor, braking unit, or energy feedback unit is used, set this parameter to 0. Otherwise, the deceleration time may be prolonged.
F3-24	Frequency gain during overvoltage stall suppression	30	0 to 100	Increasing F3-24 improves the control accuracy on the bus voltage, but leads to fluctuation of the output frequency. If the output frequency fluctuates greatly, reduce F3-24 appropriately. The function of F3-24 is the same as that of F9-03.
F3-25	Voltage gain during overvoltage stall suppression	30	0 to 100	This parameter suppresses the bus voltage. Increasing the parameter value can reduce the overshoot of the bus voltage.
F3-26	Frequency rise threshold during overvoltage stall suppression	5 Hz	0 Hz to 50 Hz	The running frequency may increase during overvoltage stall suppression. This parameter is used to limit the increase of the running frequency.
F3-10	Overexcitation gain in V/f mode	64	0 to 200	A larger overexcitation gain means better suppression effect When a braking resistor, braking unit, or energy feedback unit is used, set this parameter to 0. Otherwise, overcurrent may occur during operation.
F3-11	Oscillation suppression gain in V/f mode	40	0 to 100	A larger oscillation gain means better suppression effect.

Note

Observe the following requirements when using the braking resistor or energy feedback unit.

- Set F3-10 (Overexcitation gain) to 0. Failure to comply may lead to overcurrent during operation.
- Set F3-23 (Overvoltage stall selection) to 0. Failure to comply may prolong the deceleration time.

6.4 Protection

6.4.1 Overload protection

To protect motors with different loads, set the motor overload protection gain based on the overload capacity of the motor. The motor overload protection curve is an inverse time lag curve, as shown in the following figure.

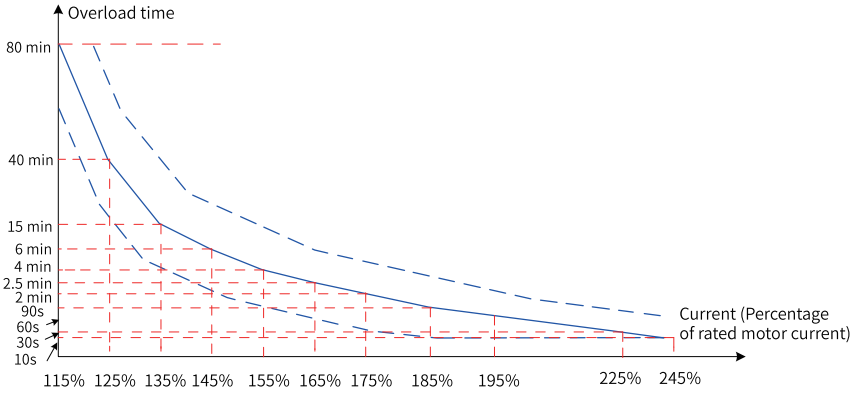

Figure 6-18 Inverse time lag curve of protection

When the running current reaches 1.75 times the rated motor current and the motor runs at this level for 2 minutes, or when the running current reaches 1.15 times the rated motor current and the motor runs at this level for 80 minutes, the AC drive reports a motor overload alarm (E11.00).

1. Example 1

- Assume that the rated motor current is 100 A and F9-01 is set to 1.00. If the running current reaches 125 A (125% of 100 A) and the motor runs at this level for 40 minutes, the AC drive reports a motor overload alarm (E11.00).

- Assume that the rated motor current is 100 A and F9-01 is set to 1.20. If the running current reaches 125 A (125% of 100 A) and the motor runs at this level for 48 minutes (40 x 1.2), the AC drive reports a motor overload alarm (E11.00).

Note

The maximum overload time is 80 minutes and the minimum overload time is 10 seconds.

2. Example 2

   The AC drive reports a motor overload error after the motor runs for 2 minutes at 150% of the rated motor current. As shown by the overload curve, 150% (I) of the rated motor current is between 145% (I1) and 155% (I2) of the rated motor current. The overload error reporting time for 145% of the rated motor current is 6 minutes (T1), and that for 155% of the rated motor current is 4 minutes (T2). Therefore, the overload error reporting time for 150% of the rated motor current in default settings can be calculated. The calculation formula is as follows:

   "T = T1 + (T2 - T1) x (I – I1)/(I2 –I1) = 4 + (6 - 4) x (150% – 145%)/(155% –145%) = 5 (min)"

   Therefore, if the overload fault needs to be reported when the motor runs at 150% of the rated motor current for 2 minutes, set the motor overload protection gain F9-01 to 0.4 (F9-01 = 2/5).

CAUTION

Note: Set F9-01 properly based on the actual overload capacity. If the value of F9-01 is set too high, the motor may be damaged because the motor overheats but the AC drive does not report the alarm timely.

When the motor overload detection level reaches the value of F9-02 (motor overload warning coefficient), the DO or fault relay outputs the motor overload warning signal. The value of F9-02 is the percentage of the time duration during which the motor runs continuously at a certain overload point without reporting the overload fault.

On the condition that the motor overload protection gain is set to 1.00 and motor overload warning coefficient is set to 80%, when the motor running current reaches 145% of the rated motor current and the motor runs at this level for 4.8 min (80% x 6), the DO or fault relay outputs the motor overload warning signal.

The motor overload warning function is used to send a warning signal to the control system via the DO before the motor overload protection applies. The motor overload

warning coefficient is used to determine how long in advance to send the warning signal before the motor overload protection applies. The higher the value is, the later the warning signal is sent. When the cumulative output current of the AC drive exceeds the product of the overload time (Y value of motor overload protection inverse time lag curve) multiplied by F9-02 (motor overload warning coefficient), the DO outputs an active motor overload warning signal. When F9-02 is set to 100% and the warning advance value is 0, the motor overload warning and the motor overload protection are triggered simultaneously.

Related parameters

Parameter code	Parameter name	Default	Value range	Description
F9-00	Motor overload protection selection	0	0: Disable 1: Enable	This parameter specifies whether to enable the motor overload protection function. The AC drive judges whether the motor is overloaded based on the inverse time lag curve. When motor overload is detected, the AC drive reports an overload fault. 0: Disable The motor overload protection function is disabled. If this parameter is set to 0, it is recommended to install a thermal relay before the motor for protection. 1: Enable The motor overload protection function is enabled.
F9-01	Motor overload protection gain	1.00	0.20 to 10.00	The motor overload protection gain is calculated according to the percentage of time when the motor runs continuously at a certain overload point without reporting an overload fault. This parameter is used to adjust the actual overload fault report time of the AC drive when motor overload occurs.
F9-02	Motor overload warning coefficient	80%	50% to 100%	The motor overload warning coefficient is calculated according to the percentage of time during which the motor runs continuously at a certain overload threshold without reporting the overload warning. A warning signal is sent to the control system through the DO before motor overload protection. The signal is used to determine how long in advance to send the warning signal before the motor overload protection is triggered. The higher the coefficient is, the later the alarm signal is sent. When the cumulative output current of the AC drive is higher than the value of the overload time (value Y of motor overload protection inverse time-lag curve) multiplied by F9-02 (motor overload warning coefficient), the multi-functional DO of the AC drive outputs a motor overload warning signal.

6.4.2 Power Dip Ride-Through

The power dip ride-through function ensures continuous system running upon an instantaneous power failure. When a power failure occurs, the AC drive makes the motor work in the generating state to keep the bus voltage around the "threshold for enabling power dip ride-through". This function prevents the AC drive from stopping due to input undervoltage, as shown in the following figure.

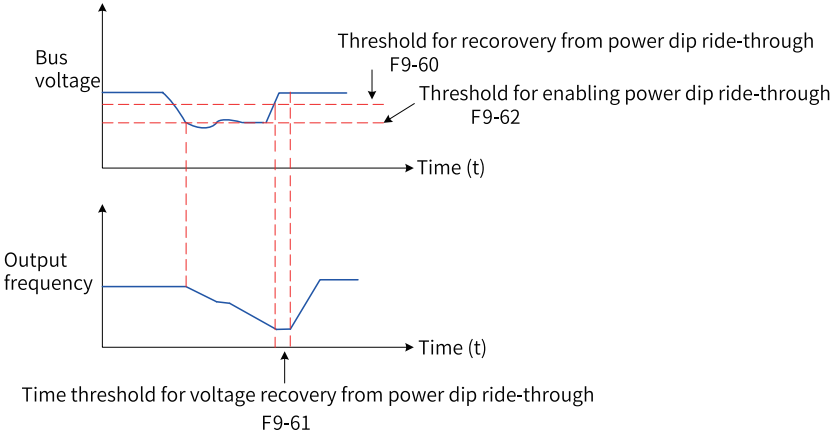

Figure 6-19 Power dip ride-through

In the "bus voltage constant control" mode, when the power grid recovers from the failure, the AC drive restores the output frequency to the target output frequency based on the acceleration time. In the "decelerate to stop" mode, when the grid resumes power supply, the AC drive decelerates to 0 Hz and stops, and will restart only after receiving a start command.

Parameters

Parameter code	Parameter name	Default	Value range	Description
F9-59	Power dip ride-through function	0	0: Disable 1: Bus voltage constant control 2: Decelerate to stop	The function enables the AC drive to keep running upon an instantaneous power failure. When a power failure occurs, the AC drive makes the motor work in the generating state to keep the bus voltage around the "threshold for enabling power dip ride-through". This function prevents the AC drive from stopping due to input undervoltage. 0: Disable Power dip ride-through is disabled. 1: Bus voltage constant control When a power failure occurs, the AC drive keeps the bus voltage around the "threshold for enabling power dip ride-through". In this mode, when the power grid recovers from the failure, the AC drive restores the target output frequency based on the acceleration time. 2: Decelerate to stop When a power failure occurs, the AC drive decelerates to stop. In this mode, when the power grid recovers from the failure, the AC drive continues decelerating to 0 Hz and stops, and will restart only after receiving a start command.

Parameter code	Parameter name	Default	Value range	Description
F9-60	Threshold for recovery from power dip ride-through	85%	80% to 100%	This parameter defines the voltage threshold for recovery from power dip ride-through. The value 100% corresponds to 540 V. This value is slightly lower than the bus voltage before power failure. Upon a power failure, the bus voltage is maintained at about F9-62 (threshold for enabling power dip ride-through). When the power supply recovers, the bus voltage rises from F9-62 (threshold for enabling power dip ride-through) to F9-60 (threshold for recovery from power dip ride-through). During this period, the output frequency of the AC drive keeps decreasing until the bus voltage reaches F9-60 (threshold for recovery from power dip ride-through).
F9-61	Duration for judging voltage recovery from power dip ride-through	0.5s	0.0s to 100.0s	This parameter is used to set the time required for the bus voltage to rise from F9-60 (threshold for recovery from power dip ride-through) to the voltage before power failure.
F9-62	Threshold for enabling power dip ride-through	80%	60% to 100%	This parameter is used to set the voltage level at which the bus voltage is maintained upon power failure. When a power loss occurs, the bus voltage is retained at a value around F9-62 (threshold for enabling power dip ride-through).
F9-71	Power dip ride-through gain Kp	40	0 to 100	This parameter is valid only when F9-59 (power dip ride-through function) is set to 1 (bus voltage constant control). If undervoltage is likely to occur during power dip ride-through, increase the power dip ride-through gain and the power dip ride-through integral coefficient.

Parameter code	Parameter name	Default	Value range	Description
F9-72	Integral coefficient Ki of power dip ride-through	30	0 to 100	This parameter is valid only when F9-59 (power dip ride-through function) is set to 2 (bus voltage constant control). If undervoltage is likely to occur during power dip ride-through, increase the power dip ride-through gain and the power dip ride-through integral coefficient.
F9-73	Deceleration time of power dip ride-through	20.0s	0.0s to 300.0s	This parameter is active only when F9-59 (power dip ride-through function) is set to 2 (decelerate to stop). When the bus voltage is below F9-62, the AC drive decelerates to stop. The deceleration time is determined by F9-73 but not F0-18.

6.5 Analog Output Terminal

The following parameters are used to rectify the zero drift of analog output and the deviation of output amplitude. They can also be used to customize AO output curves.

Table 6–2 Related parameters

Parameter code	Parameter name	Default	Value range	Description
F5-07	AO1 function selection	0	0: Running frequency 1: Frequency reference 2: Output current 3: Output torque (absolute value) 4: Output power 5: Output voltage 6: Pulse input 7: AI1 12: Communication setting 13: Motor speed 14: Output current 15: Bus voltage	For details about application, see *"Table 6-3 " on page 95*.
F5-10	AO1 zero offset coefficient	0.0%	-100.0% to 100.0%	On the AO curve, if b indicates zero offset, k indicates gain, and X indicates standard output, the actual output Y equals to kX plus b (Y = kX + b). The zero offset coefficient 100% of AO1 corresponds to 10 V (or 20 mA). The standard output refers to the value of the analog output at 0 V to 10 V (or 0 mA to 20 mA) output without zero offset or gain adjustment. Zero offset = Zero offset coefficient x 10 V (or 20 mA) The drive supports one AO, namely AO1, which can be used to indicate the internal operating parameters in the analog mode. The parameter property indicated is defined by F5-07 and F5-08.

Parameter code	Parameter name	Default	Value range	Descriptions
F5-11	AO1 gain	1.00	-10.00 to 10.00	On the AO curve, if b indicates zero offset, k indicates gain, and X indicates standard output, the actual output Y equals to kX plus b (Y = kX + b). The zero offset coefficient 100% of AO1 corresponds to 10 V (or 20 mA). The standard output refers to the value of the analog output at 0 V to 10 V (or 0 mA to 20 mA) output without zero offset or gain adjustment. Zero offset = Zero offset coefficient x 10 V (or 20 mA) The drive supports one AO, namely AO1, which can be used to indicate the internal operating parameters in the analog mode. The parameter property indicated is defined by F5-07 and F5-09.

The analog output 0 V to 10 V corresponds to 0% to 100%. When the AO function is set to 1 (frequency setting), and the drive frequency is set to 50% of the maximum frequency, the output voltage of the AO is 5 V (50% x 10 V).

Table 6–3 Pulse/analog output functions

Value	Name	Description
0	Running frequency	0 to maximum output frequency. 100.0% corresponds to the maximum frequency F0-10.
1	Frequency reference	0 to maximum output frequency
2	Output current	0 to two times the rated motor current. 100% corresponds to two times the rated motor current.
3	Output torque (absolute value)	0 to two times the rated motor torque. 100% corresponds to two times the rated motor torque (absolute value, a percentage to the rated motor torque).
4	Output power	0 to two times the rated motor power. 100% corresponds to two times the rated motor power.
5	Output voltage	0 to 1.2 times the rated AC drive voltage. 100% corresponds to 1.2 times the rated AC drive voltage.

Value	Name	Description
6	Pulse input	0.01 kHz to 100.00 kHz. The value 100.0% corresponds to 100.00 kHz.
7	AI	-10 V to 10 V. 100% corresponds to 10 V.
12	Communication setting	0.0% to 100.0%. 100% corresponds to the value set by AO communication.
13	Motor speed	0 to speed at the maximum output frequency. 100.0% corresponds to the maximum output frequency F0-10.
14	Output current	0.0 A to 1000.0 A. 100.0% corresponds to 1000.0 A.
15	Bus voltage	0.0 V to 1000.0 V. 100% corresponds to 1000.0 V.

The AO zero offset coefficient (F5-10) and AO gain (F5-11) are calculated in the following way.

Assume that the AO outputs the running frequency. The rectified output needs to be 8 V (Y1) when the frequency is 0 Hz (X1) and 4 V (Y2) when the frequency is 40 Hz (X2).

Gain formula:

$$K = \frac{(Y1-Y2) \times Xmax}{(X1-X2) \times Ymax}$$

Zero offset coefficient formula:

$$b = \frac{(X1 \times Y2) - (X2 \times Y1)}{(X1-X2) \times Ymax} \times 100\%$$

Xmax indicates the maximum output frequency 50 Hz (assume that the maximum output frequency F0-10 is 50 Hz), and Ymax (voltage) is 10 V.

In this case, the AO gain (F5-11) must be set to -0.5 and the AO zero offset coefficient (F5-10) must be set to 80%.

Table 6–4 Relationship between analog output signals and the corresponding maximum values (Ymax)

Analog output signal type	Corresponding max. value (Ymax)
Voltage	10 V
Current	20 mA

Table 6–5 Relationship between analog output content and the corresponding maximum values (Xmax)

Analog output content	Corresponding max. value (Xmax)
Running frequency	Maximum output frequency
Frequency reference	Maximum output frequency
Output current	Two times the rated motor current
Output torque (absolute value)	Two times the rated motor torque
Output power	Two times the rated power
Output voltage	1.2 times the rated AC drive voltage
Pulse input	20.00 kHz
AI	10 V or 20 mA
Communication setting	100.0%
Motor speed	Rotation speed at the maximum output frequency
Output current	1000.0 A
Bus voltage	1000.0 V

6.6 Industry Macro

The MD200 series AC drive supports industry macro instruction parameters, which can be set to optimal values with one key for different industries.

FP-01 is used as the application parameter of each industry. Each value of FP-01 is associated with an industry. You can set parameters to optimal values with one key.

Mechanical moving (conveyor belt) industry: multi-reference, short starting time, and smooth acceleration/deceleration (FP-01 = 20).

Inertia (fan) industry: Analog control applicable and reverse running prohibited (FP-01 = 21).

The following figure shows the settings for enabling the industry macro mode.

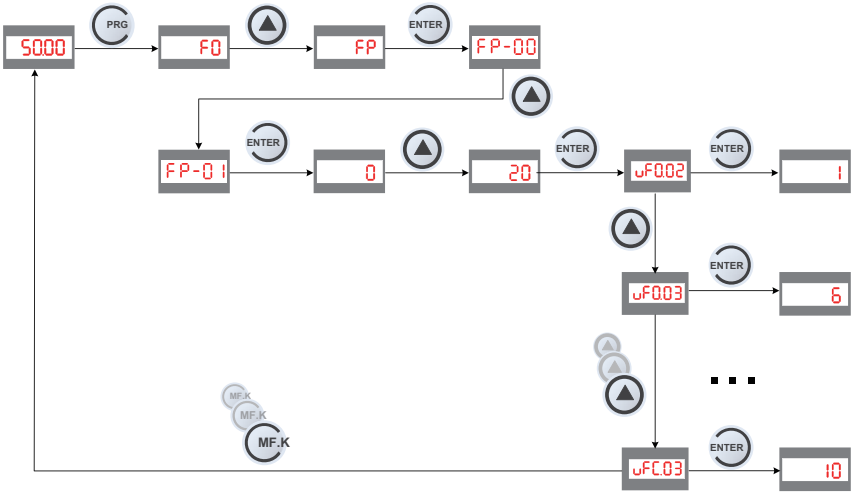

The following figure shows the settings for disabling the industry macro mode.

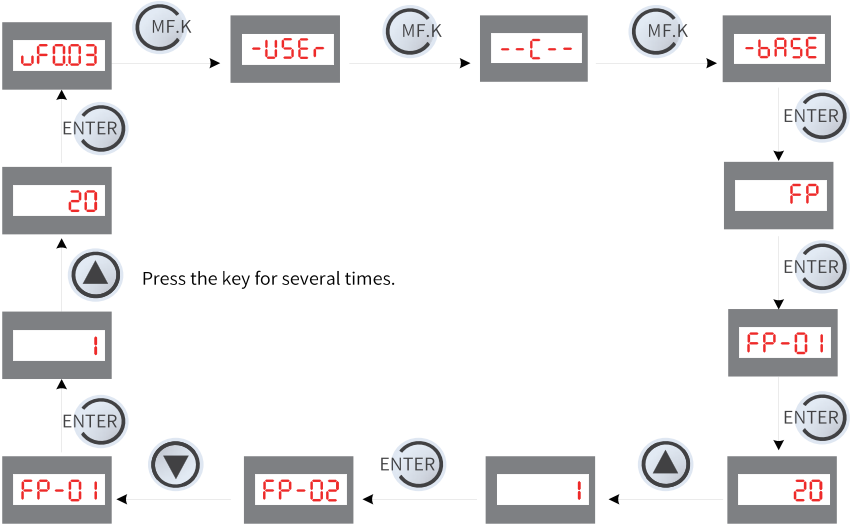

The following table lists the industry macro parameters and optimal settings.

Industry macro instruction	Related parameter	Optimal value
FP-01 = 20 Mechanical moving (conveyor belt) industry Multi-reference, short starting time, and smooth acceleration/deceleration	F0-02 (command source)	1: Terminal
	F0-03 (selection of main frequency source X)	6: Multi-reference
	F0-08 (preset frequency)	50 Hz
	F0-10 (maximum frequency)	50 Hz
	F0-17 (acceleration time 1)	3.0s
	F0-18 (deceleration time 1)	3.0s
	F3-18 (overcurrent stall action current)	150%
	F3-20 (overcurrent stall suppression gain)	20
	F4-01 (DI2 function selection)	2
	F4-02 (DI3 function selection)	12
	F4-03 (DI4 function selection)	13
	F4-10 (DI filter time)	0.100s
	F6-07 (acceleration/deceleration mode)	2: Dynamic S-curve acceleration/deceleration
	F6-11 (Start frequency of DC braking for stop)	0.5 Hz
	F6-13 (DC braking current for stop)	50%
	F6-14 (DC braking time for stop)	1s
	FC-00 (multi-reference 0)	10%
	FC-01 (multi-reference 1)	100%
	FC-02 (multi-reference 2)	75%
	FC-03 (multi-reference 3)	10%

Industry macro instruction	Related parameter	Optimal value
FP-01 = 21 Inertia (fan) industry Analog control applicable and reverse running prohibited	F0-02 (command source)	1: Terminal
	F0-03 (Selection of main frequency source X)	2: AI
	F0-08 (preset frequency)	50 Hz
	F0-10 (maximum frequency)	50 Hz
	F0-15 (carrier frequency)	6.0 kHz
	F3-00 (V/f curve setting)	0: V/f line
	F3-18 (overcurrent stall action current)	150%
	F3-20 (overcurrent stall suppression gain)	20
	F6-00 (start mode)	1: Flying start
	F8-13 (Reverse running prohibition)	1: Disable
	F9-09 (number of automatic fault resets)	3
	F9-11 (Time interval between automatic fault reset)	1.0s
	F9-59 (power dip ride-through function)	1: Bus voltage constant control

7 Communication

7.1 Definition of the Communication Data Address

The MD200 series AC drive provides the RS232/RS485 communication interface and supports the Modbus communication protocol. You can carry out centralized control by using a PC or PLC. Through the communication protocol, you can also set the running commands, modify or read parameters, and read the operating status and fault information of the drive.

The communication data of the MD200 can be divided into parameter data and non-parameter data. The latter includes the running commands, running status, running parameters, and alarms.

Parameter data

Group F (read/ write)	F0, F1, F2, F3, F4, F5, F6, F7, F8, F9, FA, FB, FC, FD, FE, FP
Group A (read/ write)	A1, A5, A6, AA, AC

- Reading parameters
  For parameters in groups F0 to FP and A1 to AC, the high-order eight bits of the communication address indicate the parameter group code, while the low-order eight bits indicate the hexadecimal number converted from the parameter No. in the parameter group. For example, the communication address of F0-16 is F010H, in which F0 indicates parameter group F0 and 10H is the hexadecimal number converted from 16. The communication address of AC-08 is AC08H, in which AC indicates parameter group AC and 08H is the hexadecimal number converted from 8.

  To read parameters, the host controllers needs to send a read command to the AC drive. The Modbus protocol is exemplified to describe the communication process that the host controller reads the drive data.

  For example, to read F0-10 (maximum frequency), the host controller sends the read command 01 03 F0 0A 01 DE D7 to the drive. In the command, 01H (settable) indicates the AC drive address; 03H indicates the read command; F0 0AH indicates the communication address of F0-10; 01H indicates the number of parameters; DE D7H indicates the CRC. Other parameters are read in the same way as the F0-10.

Table 7–1 Reading the AC drive data by the host controller

Read command frame sent by the master		Response frame returned by the slave	
Address	01H	Address	01H
Read command	03H	Read command	03H

Read command frame sent by the master		Response frame returned by the slave	
F0-10 address	F0H	Number of bytes	02H
	0AH	Description	13H
Number of parameters (H)	00H		88H
Number of parameters (L)	01H	CRC (H)	B5H
CRC (H)	97H	CRC (L)	12H
CRC (L)	08H	-	-

- Writing parameters

  For parameter groups F0 to FF, the high-order 8 bits of the communication address are 00 to 0F or F0 to FF, which is decided by whether the parameter is written to the EEPROM. The low-order 8 bits indicate the hexadecimal value converted from the parameter No. in the parameter group. For example, if the F0-16 does not need to be written to the EEPROM, the communication address of the F0-16 is 0010H; otherwise, the communication address of the F0-16 is F010H. For parameters needing to be saved upon power failure, use the communication address format that allows parameters to be written to EEPROM. However, the number of writing operations must be strictly limited by the host controller to protect the lifetime of the EEPROM chip. For parameters that do not need to be saved upon power failure, use the communication address that prevents parameters from being written to EEPROM.

  For parameter groups A0 to AD, the high-order 8 bits of the communication address are 40 to 4F or A0 to AD, which is decided by whether the parameter is written to the EEPROM. The low-order 8 bits indicate the hexadecimal value converted from the parameter No. in the parameter group. For example, if the AC-08 does not need to be written to the EEPROM, the communication address of the AC-08 is 4C08H; otherwise, the communication address of the AC-08 is AC08H.

  To write data to the parameter, the host controller needs to send a write command to the AC drive. The Modbus protocol is exemplified to describe the communication process that the host controller writes data to the drive.

  For example, to write 2 (writing to the EEPROM is not required) to AC-16 (AO2 target voltage 1), the host controller sends the following write command to the AC drive:

  01 06 4C 10 00 02 1F 5E

  In the command, 01H (settable) indicates the AC drive address; 06H indicates the write command; 4C 10H indicates the communication address of the AC-16; 0002H indicates the write value; 1F 5EH indicates the CRC. Other parameters are written in the same way as the AC-16.

Write command frame sent by the master		Response frame returned by the slave	
ADDR	01H	ADDR	01H
CMD	06H	CMD	06H
Parameter address (H)	4CH	Parameter address (H)	4CH
Parameter address (L)	10H	Parameter address (L)	10H
Write data (H)	00H	Write data (H)	00H
Write data (H)	02H	Write data (H)	02H
CRC (H)	1FH	CRC (H)	1FH
CRC (L)	5EH	CRC (L)	5EH

Non-parameter data

Status data (read-only)	Group U (monitoring parameters), AC drive fault description, and AC drive operation status
Control parameters (write-only)	Control commands, communication setting values, DO control, AO control, and parameter initialization

1. Status data

- The high-order 8 bits of the communication address of parameters in groups U0 to UF is 70 to 7F. The low-order 8 bits indicate the hexadecimal number converted from the parameter No. in the parameter group. For example, the communication address of U0-11 is 700BH.
- The host controller can obtain the fault code of the AC drive by reading the communication address of 8000H, which is fixed. For the fault code description, see the definition of F9-14 in *" Parameter List" on page 118*.
- The host controller can obtain the running status of the AC drive by reading the communication address of 3000H, which is fixed. The status word is defined as follows: 1: forward run; 2: reverse run; 3: stop.

2. Control parameters

- Control command
  When F0-02 is set to 2, the host controller can send running commands through communication to control the AC drive to start, stop, and run forward or reversely. Communication addresses and descriptions of running commands are defined in the following table.

Type	Communication address	Read/Write range		
Control command input (write-only)	2000	0001: Forward run 0002: Reverse run 0003: Forward jog	0004: Reverse jog 0005: Coast to stop	0006: Decelerate to stop 0007: Fault reset

- Communication setting value
  These references are used to set the frequency, torque upper limit, voltage in the V/f decoupled mode, PID reference, PID feedback when these value sources are set to communication. The communication address is 1000H. When the host controller sets this communication address value, its data range is -10000 to 10000, corresponding to -100.00% to 100.00%.

  For example, when the main frequency source (F0-03) is set to communication, the host controller needs to send the write command to the AC drive upon writing the frequency. The following description takes Modbus as an example to illustrate how to set the main frequency through communication. For example, to set the frequency reference to 8000 through communication, send the write command 01 06 10 00 1F 40 84 CA.

  In the command, 01H (settable) indicates the AC drive address; 06H indicates the write command; 1000H indicates the communication address of frequency reference; 1F40H (10000 in decimal format) indicates the target frequency; 84CAH indicates the CRC. To set torque reference to -8000, send the write command

  01 06 10 00 E0 C0 C4 9A. In this command, E0C0 is the low-order four bits of the hexadecimal number converted from -8000.

CAUTION

The range of frequency reference set through communication is from -10000 to +10000 (decimal), corresponding to -100.00% to +100.00%. -100.00% corresponds to the negative maximum frequency, 0.00% corresponds to the minimum frequency, and +100.00% corresponds the maximum frequency. Suppose that F0-10 = 50 Hz. If the frequency reference in the write command is 1F40H, which is 8000 in decimal format, the actual written frequency reference is 40 Hz (50 x 80.00%).

- DO control
  If function 20 (communication control) is allocated to a DO, the host controller can control the DO through communication. The communication address and command of the DO are defined in the following table.

Type	Communication address	Read/Write range
DO control (write-only)	2001	Bit 0: Reserved Bit 1: Reserved Bit 2: Relay 1 output control Bit 3: Reserved Bit 4: Reserved

- AO control
  When function 12 (communication setting) is allocated to the AO, the host controller can control analog and high-speed pulse output of the AC drive through communication. The following table describes the control communication address and command.

Type	Communication address	Command
AO control (write-only)	2002	0 to 7FFF indicate 0% to 100%.

- Parameter initialization
  The MD200 series AC drive supports industry macro instruction parameters, which can be set for optimal applications. This function is required when you need to initialize parameters of the drive by using the host controller. When the factory settings are restored through communication, the user password verification is required no matter whether the user password is 0 or not. After the verification is passed, the host controller performs parameter initialization within 30 seconds. The communication address of password verification is 1F00H. Directly write the correct user password to this address to complete verification. The following table describes the data.

Communication address of parameter initialization	Command
1F01H	0: No action 01: Restore to factory settings (excluding motor parameters) 02: Clear records 03: Reserved 04: Back up current user parameters 05 to 19: Reserved 20: Mechanical moving (conveyor belt) industry 21: Inertia (fan) industry 22 to 500: Reserved 501: Restore user backup parameters

7.2 Modbus Communication Protocol

The MD200 series AC drive provides the RS232/RS485 communication interface and supports the Modbus communication protocol. You can carry out centralized control by using a PC or PLC. Through the communication protocol, you can also set the running

commands, modify or read parameters, and read the operating status and fault information of the drive.

This protocol defines the content and format of transmitted messages during serial communication, including the master polling (or broadcasting) format and master coding method for the action, transmission data, error check, and so on. The slave uses the same structure for response, including action acknowledgment, data return and error check. If an error occurs when the slave receives a message, or the slave cannot complete the action required by the master, the slave returns a fault message as a response to the master.

Application mode

The drive, which acts as a communication slave, is connected to a PC/PLC control network consisting of one master and multiple slaves and RS485 bus.

Bus structure

Topological structure

The system consists of one master and multiple slaves. In the network, each communication device has a unique slave address. A device (usually a PC, a PLC, or an HMI) serves as the master and performs parameter read or write operations on slaves. The other devices serve as slaves to respond to queries or operations from the master. At the same moment, only one device can transmit data and the other can only receive data.

The address range of the slaves is from 1 to 247, and 0 is the broadcast address. A slave must have a unique address in the network.

Communication transmission mode

The asynchronous serial and half-duplex transmission mode are used. During serial asynchronous communication, one frame of data is sent at a time in the form of messages. According to the Modbus RTU protocol, when the idle time of the communication data cable exceeds 3.5-byte transmission time, it indicates the start of a new communication frame.

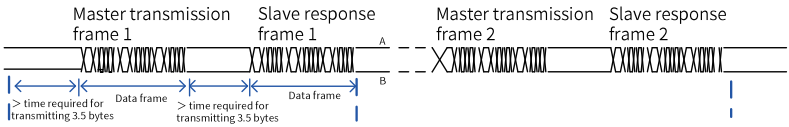

The communication protocol used by the drive is the Modbus RTU slave communication protocol, which allows the drive to respond to the "query/command" from the master or execute the action according to "query/command" from the master and return with the communication data.

The master can be a PC, an industrial control device, or a PLC. The master can communicate with a slave or broadcast messages to all slaves. When the master sends a

"query/command" to a single slave, the slave needs to return a response frame. The slave does not need to respond to a broadcast message sent by the master.

7.3 Communication Data Structure

The drive supports reading and writing only of word-type parameters, and does not support reading and writing of bytes or bits. The reading command is 0x03 and writing command is 0x06. The communication data format in the Modbus-RTU protocol supported by the AC drive is shown below.

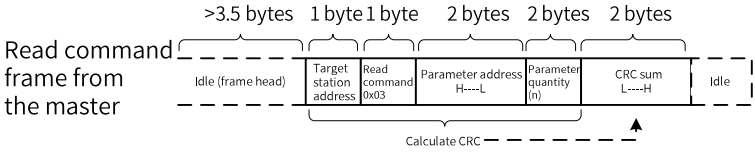

In theory, the host controller can read a maximum of 12 consecutive parameters, which must be in the same group. Otherwise, a response error will occur.

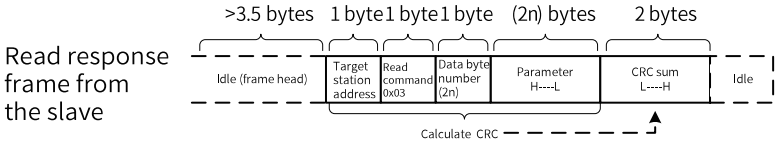

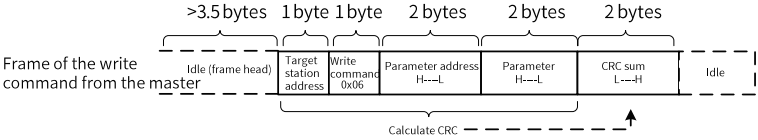

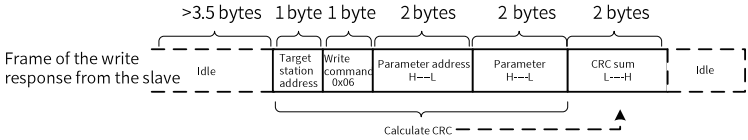

If the slave detects a communication frame error or reading/writing failure caused by other reasons, the error frame will be responded to.

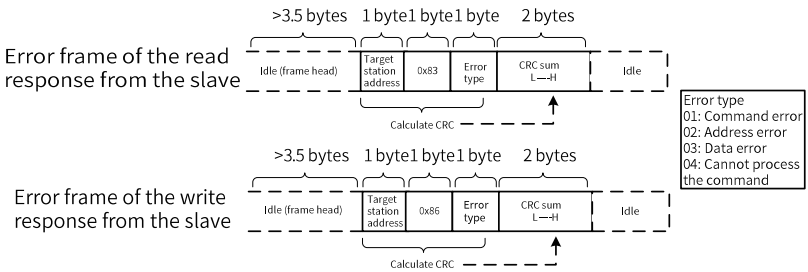

The data frame fields are described as follows.

Data frame field	Description
Frame header (START)	Longer than the time for transmitting 3.5 bytes
Slave address ADR	Communication address range: 1 to 247; 0 = Broadcast address
Command CMD	03: Read slave parameters; 06: Write slave parameters
Parameter address (H)	Internal parameter address of the AC drive, expressed in hexadecimal; parameter type and non-parameter type (for example, operation status parameters and operation commands) parameters supported. See the address definition. During transmission, low-order bytes follow high-order bytes.
Parameter address (L)	
Number of parameters (H)	The field indicates the number of parameters read in this frame. The value 1 indicates reading one parameter. Low-order bytes follow high-order bytes during transmission. In the present protocol, only one parameter is written or read at a time.
Number of parameters (L)	
Data (H)	Response data or data to be written. During transmission, low-order bytes follow high-order bytes.
Data (L)	
CRC CHK (L)	Detection value: CRC16 check value. During transmission, high-order bytes follow low-order bytes. For the calculation method, see the details of the CRC.
CRC CHK (H)	
END	Time for transmitting 3.5 bytes

CRC description:

The cyclical redundancy check (CRC) uses the RTU frame format. The message includes the CRC-based error check field. The CRC field checks the content of the entire message. The CRC field is two-byte, containing a 16-bit binary value. It is added to the message after being calculated by the transmission device. The reception device recalculates the CRC value in the message, and compares the calculated value with the CRC value in the received CRC field. If the two CRC values are different, transmission errors occur.

The CRC is first stored to 0xFFFF. Then a process is invoked to handle the successive 8-bit byte in the message and the value in the register. Only the 8-bit data in each byte is valid for the CRC. The start bit, stop bit and the parity bit do not apply to the CRC.

During generation of CRC, each 8-bit byte is in exclusive or (XOR) with the content in the register. The result is shifted to the least significant bit (LSB), and 0 is filled in the most significant bit (MSB) position. The LSB is extracted and examined. If the LSB is 1, the register then performs XOR with a preset value. If the LSB is 0, no XOR is performed. This process is repeated eight times. After the last (eighth) time, the next 8-bit byte is in XOR with the register's current value, and the process repeats for eight more shifts as described above. The final value of the register is the CRC value after all the bytes of the message have been applied. The CRC is added to the message from the low bytes to the high bytes. The CRC simple function is as follows:

```
unsigned int crc_chk_value (unsigned char *data_value,unsigned char length)
{
unsigned int crc_value=0xFFFF;
int i;
while（length- -）
{
crc_value^=*data_value++;
for（i=0;i<8;i++）
{
if（crc_value&0x0001）
{
crc_value=（crc_value>>1）^0xa001;
}
else
{
crc_value=crc_value>>1;
}
}
}
return (crc_value);
}
```

Definition of communication parameter addresses

Except those which cannot be changed because they are only for the factory use or for monitoring, parameters can be read and written.

7.4 Parameter Address Expression Rules

The parameter group No. and parameter identification No. are used to express parameter addresses.

- High-order byte: F0 to FF (group F), A0 to AF (group A), and 70 to 7F (group U)
- Low-order byte: 00 to FF

For example, the access address of F3-12 is expressed as 0xF30C.

CAUTION

- Group FF: The parameters cannot be read or changed.
- Group U: These parameters can only be read.

Some parameters cannot be modified when the AC drive is running or regardless of status of the AC drive. To modify parameters, pay attention to the setting range, unit, and description of the parameters.

Parameter group no.	Communication access address	Parameter address in RAM modified through communication
Group F0 to FE	0xF000 to 0xFEFF	0x0000 to 0x0EFF
Group A0 to AC	0xA000 to 0xACFF	0x4000 to 0x4CFF
Group U0	0x7000 to 0x70FF	-

CAUTION

Frequent storing to the EEPROM reduces its service life. Therefore, in communication mode, you only need to change values of certain parameters in RAM without storing the settings to the EEPROM.

- For parameters in group F, if you want to change a parameter through communication without saving it to the EEPROM, change the high-order F of the parameter address to 0.
- For parameters in group A, if you want to change a parameter through communication without saving it to the EEPROM, change the high-order A of the parameter address to 4.

The parameter addresses are expressed as follows:

- High-order bytes: 00 to 0F (group F) and 40 to 4F (group A)

- Low-order byte: 00 to FF

For example,

- If F3-12 is not stored in the EEPROM, the address is expressed as 030C.
- If A0-05 is not stored in the EEPROM, the address is expressed as 4005.

This address indicates that the parameter can only be written to RAM. It is invalid when the parameter is read from RAM.

The communication address definitions for the stop/run parameters are as follows.

Parameter address	Parameter description	Parameter address	Parameter description
1000	Communication reference (-10000 to +10000) (decimal)	1011	PID feedback
1001	Running frequency	1012	PLC procedure
1002	Bus voltage	1013	Pulse input frequency (unit: 0.01 kHz)
1003	Output voltage	1014	Feedback speed (unit: 0.01 Hz)
1004	Output current	1015	Remaining operating time
1005	Output power	1016	AI voltage before correction
1006	Output torque	1017	External operating panel potentiometer voltage before correction
1007	Running speed	1018	Reserved
1008	DI input flag	1019	Motor speed
1009	DO output flag	101 A	Current power-on time
100 A	AI voltage	101B	Current running time
100B	Reserved	101C	Pulse input frequency (unit: 1 Hz)
100C	External operating panel potentiometer voltage	101D	Communication setting value
100D	Counting value input	101E	Reserved
100E	Length value input	101F	Display of main frequency X
100F	Load speed	1020	Display of auxiliary frequency Y
1010	PID reference	-	-

CAUTION

- Communication setting values are percentages to the corresponding values. +10000 and -10000 correspond to +100.00% and -100.00% respectively. When F0-03, F0-04, F0-11, F2-11, FA-00, and FA-02 are set through communication, the address of all these parameters is H1000. However, only one parameter can be set through communication at a time. If all the above parameters need to set through communication, use the following method.Take F0-03 and F0-11 as examples. If F0-03 is set to 9, the running frequency is controlled by H1000. Then F0-11 cannot be set to 5 and can be set to 0. In this case, you can modify the value of F0-12 through communication to achieve modification of F0-11 through communication.
- For frequency dimension data, this percentage equals the frequency divided by the maximum frequency (F0-10).

Type	Communication address	Read/Write range		
Control command input (write-only)	2000	0001: Forward run 0002: Reverse run 0003: Forward jog	0004: Reverse jog 0005: Coast to stop	0006: Decelerate to stop 0007: Fault reset
State reading (read-only)	3000	0001: Forward run	0002: Reverse run	0003: Stop
Parameter lock with password verification required	1F00	*****(If 8888H is returned, the password verification is passed.)		
DO control (write-only)	2001	Bit 0: Reserved Bit 1: Reserved Bit 2: Relay 1 output control Bit 3: Reserved Bit 4: Reserved		
AO control (write-only)	2002	0 to 7FFF indicate 0% to 100%.		

Type	Communication address	Read/Write range		
AC drive fault	8000	0000: No fault 0001: Reserved 0002: Overcurrent during acceleration 0003: Overcurrent during deceleration 0004: Overcurrent during operation at constant speed 0005: Overvoltage during acceleration 0006: Overvoltage during deceleration 0007: Overvoltage during operation at constant speed 0008: Pre-charge resistor overload 0009: Undervoltage 000A: Drive overload 000B: Motor overload 000C: Input phase loss	000D: Output phase loss 000E: Module overtemperature 000F: External fault 0010: Communication fault 0011: Reserved 0012: Current detection fault 0013: Motor auto-tuning fault 0014: Reserved 0015: Parameter read-write fault 0016: Reserved 0017: Motor short-circuited to ground 0018: Reserved 0019: Reserved	001A: Running time reach 001B: User-defined fault 1 001C: User-defined fault 2 001D: Power-on time reach 001E: Load loss 001F: PID feedback loss during operation 0028: Fast current limit timeout 0029: Reserved 002A: Reserved 002B: Reserved 002D: Reserved 0033: Reserved 0037: Slave fault during speed synchronization process
Communication fault (fault code)	8001H	0000: No fault 0001: Password incorrect 0002: Command code error	0003: CRC error 0004: Invalid address 0005: Invalid parameter	0006: Parameter modification invalid 0007: System locked 0008: EEPROM error

When FD-05 is set to 1 (standard Modbus), the relationships between the error codes in the standard protocol and the current error codes are as below.

Error code in the standard protocol	Current error code
01: Command code error	0002: Command code error
02: Address error	0004: Invalid address
03: Data error	0005: Invalid parameter; 0001: Incorrect password
04: Commands cannot be processed.	0006: Parameter modification invalid; 0007: System locked

7.5 Descriptions of Communication Parameters in Group FD

The AC drive provides the RS232/RS485 communication port and supports the Modbus communication protocol. Based on this protocol, you can control, monitor, and change or view parameters of the AC drive by using a host controller. Make sure to set communication parameters correctly. Otherwise, communication may fail.

Parameter code	Parameter name	Default	Value range	Description
FD-00	Baud rate	5005	Ones: Modbus baud rate 0: 300 bps 1: 600 bps 2: 1200 bps 3: 2400 bps 4: 4800 bps 5: 9600 bps 6: 19200 bps 7: 38400 bps 8: 57600 bps 9: 115200 bps Tens: Reserved Hundreds: Reserved Thousands: CANlink baud rate 0: 20 kbps 1: 50 kbps 2: 100 kbps 3: 125 kbps 4: 250 kbps 5: 500 kbps 6: 1 Mbps	This parameter defines the speed of data transmitted between the host controller and the AC drive. The higher the baud rate, the quicker the communication speed. Note that the baud rate of the host controller must be the same as that of the AC drive. Otherwise, communication fails.
FD-01	Modbus data format	0	0: No check (8-N-2) 1: Even parity check (8-E-1) 2: Odd parity check (8-O-1) 3: No check (8-N-1)	This parameter defines the format of Modbus data transmitted between the host controller and the AC drive. Note that the data format of the host controller must be the same as that of the AC drive. Otherwise, communication fails.
FD-02	Local address	1	0 to 247	The local address must be unique in the range of 1 to 247, which is the basis for point-point communication between the AC drive and the host controller.

Parameter code	Parameter name	Default	Value range	Description
FD-03	Modbus response delay	2	0 ms to 20 ms	This parameter defines the interval from the end of data receiving by the AC drive to the start of data transmission to the host controller. If the response delay is shorter than the drive processing time, the drive processing time prevails. That is, after the drive finishes data processing, it sends data to the host controller. If the response delay is longer than the drive processing time, the response delay prevails. That is, after the drive finishes data processing, it waits until the response delay expires before sending the data to the host controller.
FD-04	Communication timeout time	0.0	0.0s-60.0s	When it is set to 0.0s, the Modbus communication timeout time is invalid. Generally, set this parameter to 0.0s. This parameter is used to monitor communication status in a system with continuous communication. When it is set to an effective value, and the time interval between the current communication and the next communication exceeds FD-04 (Communication timeout time), the system reports a communication fault (Err16).

Parameter code	Parameter name	Default	Value range	Description
FD-05	Data transmission protocol	1	Ones: Modbus 0: Non-standard Modbus protocol 1: Standard Modbus protocol	Ones: Modbus 0: Non-standard Modbus protocol. The number of bytes returned by the slave is one byte more than the byte stipulated in the standard Modbus protocol. Other read/write operations are the same as those stipulated in the standard Modbus protocol. 1: Standard Modbus protocol. Only word-type parameters can be read and written. The reading command is 0x03 and writing command is 0x06. Reading and writing of bytes or bits are not supported.
FD-06	Current resolution read through communication	0	0: 0.01 A (valid when the power is equal to or lower than 55 kW) 1: 0.1 A	This parameter is used to determine the current unit when the output current is read through communication.

When FD-05 is set to 0 or 1, the non-standard Modbus protocol or standard Modbus protocol is selected, respectively. The following table describes the difference between the standard and non-standard Modbus protocols.

Non-standard Modbus protocol (FD-05 = 0)		Standard Modbus protocol (FD-05 = 1)	
ADR	01H	ADR	01H
CMD	03H	CMD	03H
High-order byte of the number of bytes	00H	Number of bytes	04H
Low-order byte of the number of bytes	04H	-	-
High-order byte of data F002H	00H	High-order byte of data F002H	00H
Low-order byte of data F002H	00H	Low-order byte of data F002H	00H
High-order byte of data F003H	00H	High-order byte of data F003H	00H
High-order byte of data F003H	01H	Low-order byte of data F003H	01H
Low-order byte of CRC CHK	82H	Low-order byte of CRC CHK	3BH
High-order byte of CRC CHK	C7H	High-order byte of CRC CHK	F3H

8 List of Parameters

Parameter code	Communication address	Parameter name	Value range	Default	Unit	Change mode
Group F0: basic functions						
F0-01	0xF001	Motor 1 control mode	0: Sensorless vector control (applicable only to three-phase MD200TXX/MD200TXX-NC models) 1: Reserved 2: V/f control	2	-	Unchangeable
F0-02	0xF002	Command source	0: Operation panel (indicator OFF) 1: Terminal (indicator ON) 2: Communication (indicator blinking)	0	-	At once
F0-03	0xF003	Selection of main frequency source X	0: Digital setting (non-retentive upon power failure) 1: Digital setting (retentive upon power failure) 2: AI1 3: External operating panel potentiometer 4: Reserved 5: Pulse (DI4 for MD200XXX models and DI/DO for MD200XXX-NC models) 6: Multi-reference 7: Simple PLC 8: PID 9: Communication	0	-	At stop
F0-04	0xF004	Selection of auxiliary frequency source Y	0: Digital setting (non-retentive upon power failure) 1: Digital setting (retentive upon power failure) 2: AI1 3: External operating panel potentiometer 4: Reserved 5: Pulse (DI4 for MD200XXX models and DI/DO for MD200XXX-NC models) 6: Multi-reference 7: Simple PLC 8: PID 9: Communication	0	-	At stop

Parameter code	Communication address	Parameter name	Value range	Default	Unit	Change mode
F0-05	0xF005	Base value of auxiliary frequency Y range upon superposition	0: Relative to the maximum frequency 1: Relative to main frequency X	0	-	At once
F0-06	0xF006	Range of auxiliary frequency Y upon superposition	0 to 150	100	%	At once
F0-07	0xF007	Frequency superposition selection	Ones: Frequency reference selection 0: Main frequency X 1: Main and auxiliary frequency operation result (based on tens place) 2: Switchover between the main frequency X and the auxiliary frequency Y 3: Switchover between the main frequency X and the main and auxiliary frequency operation result 4: Switchover between the auxiliary frequency Y and the main and auxiliary frequency operation result Tens: Main and auxiliary frequency operation 0: Main frequency + Auxiliary frequency 1: Main frequency – Auxiliary frequency 2: Max. (main frequency, auxiliary frequency) 3: Min. (main frequency, auxiliary frequency)	0	-	At once
F0-08	0xF008	Preset frequency	0.00 to F0-10	50.00	Hz	At once
F0-09	0xF009	Running direction	0: Default direction 1: Opposite to the default direction	0	-	At once
F0-10	0xF00A	Maximum frequency	50.00 to 500.00	50.00	Hz	At stop

Parameter code	Communication address	Parameter name	Value range	Default	Unit	Change mode
F0-11	0xF00B	Source of the frequency upper limit	0: F0-12 1: AI1 2: External operating panel potentiometer 3: Reserved 4: Pulse (DI4 for MD200XXX models and DI/DO for MD200XXX-NC models) 5: Communication	0	-	At stop
F0-12	0xF00C	Frequency upper limit	F0-14 to F0-10	50.00	Hz	At once
F0-14	0xF00E	Frequency lower limit	0.00 to F0-12	0.00	Hz	At once
F0-15	0xF00F	Carrier frequency	0.8 to 11.0 (applicable to single-phase MD200SXX/MD200SXX-NC models) 0.8 to 12.0 (applicable to three-phase MD200TXX/MD200TXX-NC models)	6.0	kHz	At once
F0-16	0xF010	Carrier frequency change with temperature	0: Disable 1: Enable	1	-	At once
F0-17	0xF011	Acceleration time 1	0.0 to 6500.0	20.0	-	At once
F0-18	0xF012	Deceleration time 1	0.0 to 6500.0	20.0	-	At once
F0-19	0xF013	Acceleration/ Deceleration time unit	0: 1s 1: 0.1s 2: 0.01s	1	-	At stop
F0-23	0xF017	Retention of digital setting frequency upon stop	0: Non-retentive 1: Retentive	0	-	At once
F0-25	0xF019	Base frequency for acceleration/ deceleration time	0: Maximum frequency (F0-10) 1: Frequency reference 2: 100 Hz	0	-	At stop
F0-26	0xF01A	Base value for frequency adjusted by UP/ DOWN key during operation	0: Running frequency 1: Frequency reference	0	-	At stop
Group F1: motor parameters						

Parameter code	Communication address	Parameter name	Value range	Default	Unit	Change mode
F1-01	0xF101	Rated motor power	0.1 to 3.7 (applicable to single-phase MD200SXX/MD200SXX-NC models) 0.1 to 5.5 (applicable to three-phase MD200TXX/MD200TXX-NC models)	0.4	kW	At stop
F1-02	0xF102	Rated motor voltage	1 to 1000 (applicable to single-phase MD200SXX/MD200SXX-NC models) 1 to 600 (applicable to three-phase MD200TXX/MD200TXX-NC models)	220 (applicable to single-phase MD200SXX/MD200SXX-NC models) 380 (applicable to three-phase MD200TXX/MD200TXX-NC models)	V	At stop
F1-03	0xF103	Rated motor current	0.01 to 655.35 (applicable to single-phase MD200SXX/MD200SXX-NC models) 0.01 to 30.00 (applicable to three-phase MD200TXX/MD200TXX-NC models)	2.3 (applicable to single-phase MD200SXX/MD200SXX-NC models) 1.5 (applicable to three-phase MD200TXX/MD200TXX-NC models)	A	At stop
F1-04	0xF104	Rated motor frequency	0.01 to F0-10	50.00	Hz	At stop
F1-05	0xF105	Rated motor speed	1 to 65535	1460	rpm	At stop
F1-06	0xF106	Stator resistance of asynchronous motor	0.001 to 65.535	4.007	Ω	At stop

Parameter code	Communication address	Parameter name	Value range	Default	Unit	Change mode
F1-07	0xF107	Rotor resistance of asynchronous motor (applicable only to three-phase MD200TXX/ MD200TXX-NC models)	0.001 Ω to 65.535 Ω	2.462	Ω	At stop
F1-08	0xF108	Leakage inductance of asynchronous motor (applicable only to three-phase MD200TXX/ MD200TXX-NC models)	0.01 mH to 655.35 mH	13.58	mH	At stop
F1-09	0xF109	Mutual inductance of asynchronous motor (applicable only to three-phase MD200TXX/ MD200TXX-NC models)	0.1 mH to 6553.5 mH	182.1	mH	At stop
F1-10	0xF10A	No-load current of asynchronous motor (not applicable to single-phase MD200SXX-NC models)	0.01 to F1-03	2.02	A	At stop
F1-37	0xF125	Parameter auto-tuning selection	0: No auto-tuning 1: Auto-tuning of some asynchronous motor parameters in static state 2: Auto-tuning of all asynchronous motor parameters in static state (applicable only to three-phase MD200TXX/MD200TXX-NC models)	0	-	At stop
Group F2: vector control parameters						

Parameter code	Communication address	Parameter name	Value range	Default	Unit	Change mode
F2-00	0xF200	Speed loop proportional gain 1 (applicable only to three-phase MD200TXX/ MD200TXX-NC models)	1 to 100	30	-	At once
F2-01	0xF201	Speed loop integral time 1 (applicable only to three-phase MD200TXX/ MD200TXX-NC models)	0.01 to 10.00	0.50	-	At once
F2-02	0xF202	Switchover frequency 1 (applicable only to three-phase MD200TXX/ MD200TXX-NC models)	0.00 to F2-05	5.00	Hz	At once
F2-03	0xF203	Speed loop proportional gain 2 (applicable only to three-phase MD200TXX/ MD200TXX-NC models)	1 to 100	20	-	At once
F2-04	0xF204	Speed loop integral time 2 (applicable only to three-phase MD200TXX/ MD200TXX-NC models)	0.01 to 10.00	1.00	-	At once
F2-05	0xF205	Switchover frequency 2 (applicable only to three-phase MD200TXX/ MD200TXX-NC models)	F2-02 to F0-10	10.00	Hz	At once

Parameter code	Communication address	Parameter name	Value range	Default	Unit	Change mode
F2-06	0xF206	Slip gain in vector control (applicable only to three-phase MD200TXX/ MD200TXX-NC models)	50 to 200	100	%	At once
F2-08	0xF208	Overexcitation gain in vector control (applicable only to three-phase MD200TXX/ MD200TXX-NC models)	0 to 200	0	-	At once
F2-09	0xF209	Torque upper limit source in speed control (applicable only to three-phase MD200TXX/ MD200TXX-NC models)	0: F2-10 1: AI1 2: External operating panel potentiometer 3: Reserved 4: Pulse (DI4 for MD200XXX models and DI/DO for MD200XXXNC models) 5: Communication 6: Min. (AI1, external operating panel potentiometer) 7: Max. (AI1, external operating panel potentiometer)	0	-	At stop
F2-10	0xF20A	Digital setting of torque upper limit in speed control (applicable only to three-phase MD200TXX/ MD200TXX-NC models)	0.0 to 200.0	150.0	%	At once

Parameter code	Communication address	Parameter name	Value range	Default	Unit	Change mode
F2-11	0xF20B	Torque upper limit source in speed control (braking) (applicable only to three-phase MD200TXX/ MD200TXX-NC models)	0: F2-10 1: AI1 2: External operating panel potentiometer 3: Reserved 4: Pulse (DI4 for MD200XXX models and DI/DO for MD200XXXNC models) 5: Communication 6: Min. (AI1, external operating panel potentiometer) 7: Max. (AI1, external operating panel potentiometer) 8: F2-12	0	-	At stop
F2-12	0xF20C	Digital setting of torque upper limit (braking) (applicable only to three-phase MD200TXX/ MD200TXX-NC models)	0.0 to 200.0	150.0	%	At once
F2-13	0xF20D	Excitation adjustment proportional gain (applicable only to three-phase MD200TXX/ MD200TXX-NC models)	0 to 60000	10	-	At once
F2-14	0xF20E	Excitation adjustment integral gain (applicable only to three-phase MD200TXX/ MD200TXX-NC models)	0 to 60000	10	-	At once

Parameter code	Communication address	Parameter name	Value range	Default	Unit	Change mode
F2-15	0xF20F	Torque adjustment proportional gain (applicable only to three-phase MD200TXX/ MD200TXX-NC models)	0 to 60000	10	-	At once
F2-16	0xF210	Torque adjustment integral gain (applicable only to three-phase MD200TXX/ MD200TXX-NC models)	0 to 60000	10	-	At once
F2-17	0xF211	Speed loop integral attribute (applicable only to three-phase MD200TXX/ MD200TXX-NC models)	0: Integral separation disabled 1: Integral separation enabled	0	-	At stop
F2-18	0xF212	Torque feedforward gain (applicable only to three-phase MD200TXX/ MD200TXX-NC models)	20 to 100	80	-	At once
F2-19	0xF213	Torque feedforward filter time (applicable only to three-phase MD200TXX/ MD200TXX-NC models)	10 to 200	50	-	At once

Parameter code	Communication address	Parameter name	Value range	Default	Unit	Change mode
F2-21	0xF215	Maximum torque coefficient in field weakening area (applicable only to three-phase MD200TXX/ MD200TXX-NC models)	50 to 200	80	%	At once
Group F3: V/f control parameters						
F3-00	0xF300	V/f curve setting	0: V/f line 1: Multi-point V/f curve 10: V/f fully-decoupled mode 11: V/f half-decoupled mode	0	-	At stop
F3-01	0xF301	Torque boost	0.0 to 30.0	0.0	%	At once
F3-02	0xF302	Cut-off frequency of torque boost	0.00 to F0-10	50.00	Hz	At stop
F3-03	0xF303	Frequency 1 on multi-point V/f curve	0.00 to F3-05	0.00	Hz	At stop
F3-04	0xF304	Voltage 1 on multi-point V/f curve	0.0 to 100.0	0.0	%	At stop
F3-05	0xF305	Frequency 2 on multi-point V/f curve	F3-03 to F3-07	0.00	Hz	At stop
F3-06	0xF306	Voltage 2 on multi-point V/f curve	0.0 to 100.0	0.0	%	At stop
F3-07	0xF307	Frequency 3 on multi-point V/f curve	F3-05 to F1-04	0.00	Hz	At stop
F3-08	0xF308	Voltage 3 on multi-point V/f curve	0.0 to 100.0	0.0	%	At stop
F3-10	0xF30A	Overexcitation gain in V/f mode	0 to 200	64	-	At once

Parameter code	Communication address	Parameter name	Value range	Default	Unit	Change mode
F3-13	0xF30D	Voltage source in V/f decoupled mode	0: Digital setting (F3-14) 1: AI1 2: External operating panel potentiometer 3: Reserved 4: Pulse setting (DI4 for MD200XXX models and DI/DO for MD200XXX-NC models) 5: Multi-reference 6: Simple PLC 7: PID 8: Communication setting	0	-	At once
F3-14	0xF30E	Voltage digital setting in V/f decoupled mode	0 to F1-02	0	V	At once
F3-15	0xF30F	Voltage rise time in V/f decoupled mode	0.0 to 1000.0	0.0	-	At once
F3-16	0xF310	Voltage decline time in V/f decoupled mode	0.0 to 1000.0	0.0	-	At once
F3-17	0xF311	Stop mode in V/f decoupled mode	0: The frequency and voltage decline to 0 independently. 1: The frequency declines to 0 after the voltage declines to 0.	0	-	At stop
F3-18	0xF312	Overcurrent stall action current	50 to 200	150	%	At stop
F3-19	0xF313	Overcurrent stall suppression	0: Disable 1: Enable	1	-	At stop
F3-20	0xF314	Overcurrent stall suppression gain	0 to 100	20	-	At once
F3-21	0xF315	Compensation coefficient for overcurrent stall action current at multiplied rated frequency	0 to 200	50	%	At stop

Parameter code	Communication address	Parameter name	Value range	Default	Unit	Change mode
F3-22	0xF316	Overvoltage stall action voltage	330.0 to 800.0	390.0 (applicable to single-phase MD200SXX/ MD200SXX-NC models) 760.0 (applicable to three-phase MD200TXX/ MD200TXX-NC models)	V	At stop
F3-23	0xF317	Overvoltage stall suppression	0: Disable 1: Enable	1	-	At stop
F3-24	0xF318	Frequency gain during overvoltage stall suppression	0 to 100	50	-	At once
F3-25	0xF319	Voltage gain during overvoltage stall suppression	0 to 100	30	-	At once
F3-26	0xF31A	Frequency rise threshold during overvoltage stall suppression	0 to 50	5	Hz	At stop
F3-27	0xF31B	Slip compensation time constant	0.1 to 10.0	0.5	-	At once
Group F4: input terminals						

Parameter code	Communication address	Parameter name	Value range	Default	Unit	Change mode
F4-00	0xF400	DI1 function selection	0: No function 1: Forward run (FWD) 2: Reverse run (REV) 3: Three-wire operation control 4: Forward jog (FJOG) 5: Reverse jog (RJOG) 6: Function as the UP key 7: Function as the DOWN key 8: Coast to stop 9: Fault reset (RESET) 10: Operation pause 11: External fault NO input 12: Multi-reference terminal 1 13: Multi-reference terminal 2 14: Multi-reference terminal 3 15: Multi-reference terminal 4 16: Acceleration/Deceleration time selection terminal 1 17: Reserved 18: Frequency reference switchover 19: Clear information set by UP/DOWN keys on the operating panel or by terminals functioning as the UP/DOWN keys 20: Control command switchover terminal 1 21: Acceleration/Deceleration inhibited 22: PID pause 23: Simple PLC state reset 24: Wobble frequency pause 25: Counter input 26: Counter reset 27: Length counting input 28: Length reset 29: Reserved Continued	1	-	At stop

Parameter code	Communication address	Parameter name	Value range	Default	Unit	Change mode
Same as above	Same as above	Same as above	Continued 30: Pulse frequency input (DI4 for MD200XXX models and DI/DO for MD200XXX-NC models) 31: Reserved 32: Immediate DC braking 33: External fault NC input 34: Frequency modification enable 35: PID action direction reversal 36: External stop terminal 1 37: Control command switchover terminal 2 38: PID integral pause 39: Switch main frequency source to preset frequency 40: Switch auxiliary frequency source to preset frequency	Same as above	Same as above	Same as above
Same as above	Same as above	Same as above	Continued 41: Reserved 42: Reserved 43: PID parameter switchover 44: User-defined fault 1 45: User-defined fault 2 46: Reserved 47: Emergency stop 48: External stop terminal 2 49: Deceleration DC braking 50: Clear the current running time 51: Two-wire/Three-wire mode switchover 52: Reverse frequency inhibited	Same as above	Same as above	Same as above
F4-01	0xF401	DI2 function selection	Same as F4-00	4	-	At stop
F4-02	0xF402	DI3 function selection	Same as F4-00	9	-	At stop
F4-03	0xF403	DI4 function selection	Same as F4-00	12	-	At stop
F4-04	0xF404	DI/DO input function selection (applicable only to MD200SXX-NC/MD200TXX-NC models)	Same as F4-00	0	-	At stop
F4-10	0xF40A	DI filter time	0.000 to 1.000	0.010	-	At once

Parameter code	Communication address	Parameter name	Value range	Default	Unit	Change mode
F4-11	0xF40B	Terminal control mode	0: Two-wire mode 1 1: Two-wire mode 2 2: Three-wire mode 1 3: Three-wire mode 2	0	-	At stop
F4-12	0xF40C	Step value of terminal functioning as UP/DOWN keys	0.001 to 65.535	1.000	Hz/s	At once
F4-13	0xF40D	Minimum input of AI curve 1	0.00 to F4-15	0.00	V	At once
F4-14	0xF40E	Percentage corresponding to the minimum input of AI curve 1	-100.0 to 100.0	0.0	%	At once
F4-15	0xF40F	Maximum input of AI curve 1	F4-13 to 10.00	10.00	V	At once
F4-16	0xF410	Percentage corresponding to the maximum input of AI curve 1	-100.0 to 100.0	100.0	%	At once
F4-17	0xF411	AI1 fitter time	0.00 to 10.00	0.10	-	At once
F4-18	0xF412	Minimum input of AI curve 2 (applicable only to single-phase MD200SXX/ MD200SXX-NC models)	0.00 to 10.00	0.00	V	At once
F4-19	0xF413	Percentage corresponding to the minimum input of AI curve 2 (applicable only to single-phase MD200SXX/ MD200SXX-NC models)	-100.0 to 100.0	0.0	%	At once
F4-20	0xF414	Maximum input of AI curve 2 (applicable only to single-phase MD200SXX/ MD200SXX-NC models)	0.00 to 10.00	10.00	V	At once

Parameter code	Communication address	Parameter name	Value range	Default	Unit	Change mode
F4-21	0xF415	Percentage corresponding to the maximum input of AI curve 2 (applicable only to single-phase MD200SXX/ MD200SXX-NC models)	-100.0 to 100.0	100.0	%	At once
F4-22	0xF416	AI2 filter time (applicable only to single-phase MD200SXX/ MD200SXX-NC models)	0.00 to 10.00	0.10	-	At once
F4-28	0xF41C	Pulse minimum input	0.00 to F4-30	0.00	kHz	At once
F4-29	0xF41D	Percentage corresponding to pulse minimum input	-100.0 to 100.0	0.0	%	At once
F4-30	0xF41E	Pulse maximum input	F4-28 to 20.00	20.00	kHz	At once
F4-31	0xF41F	Percentage corresponding to pulse maximum input	-100.0 to 100.0	100.0	%	At once
F4-32	0xF420	Pulse filter time	0.00 to 10.00	0.10	-	At once
F4-33	0xF421	AI curve selection	Ones: AI1 curve selection 1: Curve 1 (2 points, F4-13 to F4-16) 2: Curve 2 (2 points, F4-18 to F4-21) 3: Curve 3 (2 points, F4-23 to F4-26) 4: Curve 4 (4 points, A6-00 to A6-07) 5: Curve 5 (4 points, A6-08 to A6-15) Tens: Curve selection for external operating panel potentiometer 1: Curve 1 (2 points, F4-13 to F4-16) 2: Curve 2 (2 points, F4-18 to F4-21) 3: Curve 3 (2 points, F4-23 to F4-26) 4: Curve 4 (4 points, A6-00 to A6-07) 5: Curve 5 (4 points, A6-08 to A6-15)	0x0021	-	At once

Parameter code	Communication address	Parameter name	Value range	Default	Unit	Change mode
F4-34	0xF422	AI lower limit selection (applicable only to single-phase MD200SXX/ MD200SXX-NC models)	Ones: Selection when AI1 value lower than minimum input value 0: Corresponding to the minimum input setting 1: 0.0% Tens: Selection when external operating panel potentiometer value lower than minimum input value 0: Corresponding to the minimum input setting 1: 0.0%	0x0	-	At once
F4-35	0xF423	DI1 delay (applicable only to single-phase MD200SXX/ MD200SXX-NC models)	0.0 to 3600.0	0.0	-	At once
F4-36	0xF424	DI2 delay (applicable only to single-phase MD200SXX/ MD200SXX-NC models)	0.0 to 3600.0	0.0	-	At once
F4-37	0xF425	DI3 delay (applicable only to single-phase MD200SXX/ MD200SXX-NC models)	0.0 to 3600.0	0.0	-	At once
F4-38	0xF426	DI active mode selection 1	Ones: DI1 0: Active high 1: Active low Tens: DI2 0: Active high 1: Active low Hundreds: DI3 0: Active high 1: Active low Thousands: DI4 0: Active high 1: Active low	0	-	At stop
F4-41	0xF429	DI/DO and DI4 type	Ones: DI/DO and DI4 type 0: DI/Pulse 1: DO	0	-	At stop
Group F5: output terminals						

Parameter code	Communication address	Parameter name	Value range	Default	Unit	Change mode
F5-02	0xF502	Output function selection of control board relay	0: No output 1: Drive in operation 2: Fault output (coast to stop) 3: Frequency level detection 1 4: Frequency reached 5: Operation at zero speed (no output at stop) 6: Motor overload alarm 7: Drive overload alarm 8: Set count value reached 9: Designated count value reached 10: Length reached 11: Simple PLC cycle completed 12: Cumulative operating time reached 13: Frequency limited 14: Reserved 15: Ready to run 16: Reserved 17: Frequency upper limit reached 18: Frequency lower limit reached (no output at stop) 19: Undervoltage 20: Communication setting 21: Reserved 22: Reserved 23: Operation at zero speed 2 (output at stop) 24: Cumulative power-on time reached 25: Frequency level detection 2 26: Frequency 1 reached 27: Frequency 2 reached 28: Current 1 reached 29: Current 2 reached 30: Timing reached 31: AI1 input limit exceeded 32: Drive output load loss 33: Reverse running 34: Zero current state 35: Module temperature reached 36: Output current limit exceeded 37: Frequency lower limit reached (output at stop) 38: Alarm (all faults) 39: Motor overheat 40: Present operating time reached 41: Fault output	2	-	At once

Parameter code	Communication address	Parameter name	Value range	Default	Unit	Change mode
F5-04	0xF504	DI/DO output function selection	0: No output 1: Drive in operation 2: Fault output (coast to stop) 3: Frequency level detection 1 4: Frequency reached 5: Operation at zero speed (no output at stop) 6: Motor overload alarm 7: Drive overload alarm 8: Set count value reached 9: Designated count value reached 10: Length reached 11: Simple PLC cycle completed 12: Cumulative operating time reached 13: Frequency limited 14: Reserved 15: Ready to run 16: Reserved 17: Frequency upper limit reached 18: Frequency lower limit reached (no output at stop) 19: Undervoltage 20: Communication setting 21: Reserved 22: Reserved 23: Operation at zero speed 2 (output at stop) 24: Cumulative power-on time reached 25: Frequency level detection 2 26: Frequency 1 reached 27: Frequency 2 reached 28: Current 1 reached 29: Current 2 reached 30: Timing reached 31: AI1 input limit exceeded 32: Drive output load loss 33: Reverse running 34: Zero current state 35: Module temperature reached 36: Output current limit exceeded 37: Frequency lower limit reached (output at stop) 38: Alarm (all faults) 39: Motor overheat 40: Present operating time reached 41: Fault output	0	-	At once

Parameter code	Communication address	Parameter name	Value range	Default	Unit	Change mode
F5-07	0xF507	AO1 function selection	0: Running frequency 1: Frequency reference 2: Output current 3: Output torque (absolute value) 4: Output power 5: Output voltage 6: Pulse input 7: AI1 8: Reserved 9: Reserved 10: Reserved 11: Reserved 12: Communication setting 13: Motor speed 14: Output current 15: Bus voltage 16: Reserved	0	-	At once
F5-10	0xF50A	AO1 zero offset coefficient	-100.0 to 100.0	0.0	%	At once
F5-11	0xF50B	AO1 gain	-10.00 to 10.00	1.00	-	At once
F5-18	0xF512	Relay 1 output delay	0.0 to 3600.0	0.0	-	At once
F5-20	0xF514	DI/DO output delay (applicable only to MD200SXX/ MD200SXX-NC models)	0.0 to 3600.0	0.0	-	At once
F5-22	0xF516	DO valid status selection	Ones: Reserved 0: Positive logic 1: Negative logic Tens: Relay 1 0: Positive logic 1: Negative logic Hundreds: Reserved 0: Positive logic 1: Negative logic Thousands: DI/DO 0: Positive logic 1: Negative logic	0	-	At once
Group F6: start/stop control						
F6-00	0xF600	Start mode	0: Direct start 1: Flying start	0	-	At once
F6-01	0xF601	Flying start mode	0: From the stop frequency 1: From the mains frequency 2: From the maximum frequency	0	-	At stop

Parameter code	Communication address	Parameter name	Value range	Default	Unit	Change mode
F6-03	0xF603	Startup frequency	0.00 to 10.00	0.00	Hz	At once
F6-04	0xF604	Startup frequency hold time	0.0 to 100.0	0.0	-	At stop
F6-07	0xF607	Acceleration/ Deceleration mode	0: Linear acceleration/deceleration 1: Static S-curve acceleration/ deceleration 2: Dynamic S-curve acceleration/ deceleration	0	-	At stop
F6-08	0xF608	Time proportion of S-curve start segment	0.0 to 100.0	30.0	%	At stop
F6-09	0xF609	Time proportion of S-curve end segment	0.0 to 100.0	30.0	%	At stop
F6-10	0xF60A	Stop mode	0: Decelerate to stop 1: Coast to stop	0	-	At once
F6-11	0xF60B	Start frequency of DC braking for stop	0.00 to 10.00	0.00	Hz	At once
F6-12	0xF60C	DC braking waiting time for stop	0.0 to 100.0	0.0	-	At once
F6-13	0xF60D	DC braking current for stop	0 to 100	50	%	At once
F6-14	0xF60E	DC braking time for stop	0.0 to 100.0	0.0	-	At once
F6-21	0xF615	Demagnetization time (valid in SVC mode)	0.00 to 5.00	0.50	-	At stop
F6-22	0xF616	Reserved	0.00 to F6-11	0.00	Hz	At once
F6-23	0xF617	Reserved (applicable only to single-phase MD200SXX/ MD200SXX-NC models)	1 to 100	10	-	At once
Group F7: operating panel and display						

Parameter code	Communication address	Parameter name	Value range	Default	Unit	Change mode
F7-00	0xF700	LED default display check	0: Display during running or at stop 1: Display when Up/Down keys are pressed 2: Undervoltage alarm display (applicable only to MD200SXX/MD200TXX models) 3: Fault/Alarm display (applicable only to MD200SXX/MD200TXX models) 4: Parameter auto-tuning display (applicable only to MD200SXX/MD200TXX models) 5: LED detection display (applicable only to MD200SXX/MD200TXX models)	0	-	At stop
F7-01	0xF701	MF.K key function selection	0: MF.K key unavailable 1: Switchover between the operating panel control mode and remote command control mode 2: Switchover between forward run and reverse run 3: Forward jog (long press MF.K to start jog and release the key to end) 4: Reverse jog (long press MF.K to start jog and release the key to end) 5: Reserved	5	-	At stop
F7-02	0xF702	STOP/RESET key availability	0: STOP/RESET key available only in operating panel control mode 1: STOP/RESET key available in any operation mode	1	-	At once

Parameter code	Communication address	Parameter name	Value range	Default	Unit	Change mode
F7-03	0xF703	Parameter 1 displayed on LED operating panel during operation	Bit 0: Running frequency (Hz) Bit 1: Frequency reference (Hz) Bit 2: Bus voltage (V) Bit 3: Output voltage (V) Bit 4: Output current (A) Bit 5: Output power (kW) Bit 6: Output torque (%) Bit 7: DI status Bit 8: DO status Bit 9: AI1 voltage (V) Bit 10: Reserved Bit 11: Voltage of external operating panel potentiometer (V) Bit 12: Count value Bit 13: Length value Bit 14: Load speed display Bit 15: PID reference	0x1F	-	At once
F7-04	0xF704	Parameter 2 displayed on LED operating panel during operation	Bit 0: PID feedback Bit 1: PLC stage Bit 2: Pulse input frequency (kHz) Bit 3: Running frequency 2 (Hz) Bit 4: Remaining running time Bit 5: AI1 voltage before correction (V) Bit 6: Voltage of external operating panel potentiometer before correction (V) Bit 7: Reserved Bit 8: Motor speed (applicable only to single-phase MD200SXX models) Bit 9: Current power-on time (hour) Bit 10: Current running time (min.) Bit 11: Pulse input frequency (Hz) Bit 12: Communication setting value Bit 13: Reserved Bit 14: Main frequency X display Bit 15: Auxiliary frequency Y display	0x0	-	At once

Parameter code	Communication address	Parameter name	Value range	Default	Unit	Change mode
F7-05	0xF705	Parameter displayed on LED operating panel at stop	Bit 0: Frequency reference (Hz) Bit 1: Bus voltage (V) Bit 2: DI state Bit 3: DO state Bit 4: AI1 voltage (V) Bit 5: Reserved Bit 6: Voltage (V) input through external operating panel potentiometer Bit 7: Count value Bit 8: Length value Bit 9: PLC stage Bit 10: Load speed Bit 11: PID reference Bit 12: Pulse input frequency (kHz)	0x13	-	At once
F7-06	0xF706	Load transmission ratio	0.001 to 65.000	1.000	-	At once
F7-07	0xF707	Inverter heatsink temperature	0 to 999	0	°C	Unchangeable
F7-08	0xF708	Product No.	0.00 to 655.35	0.00	-	Unchangeable
F7-09	0xF709	Cumulative running time	0 to 65535	0	h	Unchangeable
F7-10	0xF70A	Performance software version	0.00 to 655.35	0.00	-	Unchangeable
F7-11	0xF70B	Function software version	0.00 to 655.35	0.00	-	Unchangeable
F7-12	0xF70C	Number of decimal places for load speed display	Ones: Number of decimal places for the value of U0-14 0: 0 1: 1 2: 2 Tens: Number of decimal places for the value of U0-19 1: 1 2: 2	20 (applicable to single-phase MD200SXX/MD200SXX-NC models) 21 (applicable to three-phase MD200TXX/MD200TXX-NC models)	-	At once
F7-13	0xF70D	Cumulative power-on time	0 to 65535	0	h	Unchangeable

Parameter code	Communication address	Parameter name	Value range	Default	Unit	Change mode
F7-14	0xF70E	Cumulative power consumption	0 to 65535	0	kWh	Unchangeable
F7-15	0xF70F	Temporary performance software version	0.00 to 655.35	0.00	-	Unchangeable
F7-16	0xF710	Temporary function software version	0.00 to 655.35	0.00	-	Unchangeable
Group F8: auxiliary functions						
F8-00	0xF800	Jog frequency	0.00 to F0-10	2.00	Hz	At once
F8-01	0xF801	Jog acceleration time	0.0 to 6500.0	20.0	-	At once
F8-02	0xF802	Jog deceleration time	0.0 to 6500.0	20.0	-	At once
F8-03	0xF803	Acceleration time 2	0.0 to 6500.0	20.0	-	At once
F8-04	0xF804	Deceleration time 2	0.0 to 6500.0	20.0	-	At once
F8-07	0xF807	Acceleration time 4 (applicable only to single-phase MD200SXX/ MD200SXX-NC models)	0.0 to 6500.0	0.0	-	At once
F8-08	0xF808	Deceleration time 4 (applicable only to single-phase MD200SXX/ MD200SXX-NC models)	0.0 to 6500.0	0.0	-	At once
F8-12	0xF80C	Dead-zone time of forward/ reverse run	0.0 to 3000.0	0.0	-	At once
F8-13	0xF80D	Reverse running prohibition	0: Disable 1: Enable	0	-	At once
F8-14	0xF80E	Running mode when running frequency is below the frequency lower limit	0: Run at frequency lower limit 1: Stop 2: Run at zero speed	0	-	At once

Parameter code	Communication address	Parameter name	Value range	Default	Unit	Change mode
F8-16	0xF810	Cumulative power-on time threshold	0 to 65000	0	h	At once
F8-17	0xF811	Cumulative running time threshold	0 to 65000	0	h	At once
F8-18	0xF812	Protection upon start	0: Disable 1: Enable	0	-	At once
F8-19	0xF813	Detection frequency (FDT1)	0.00 to F0-10	50.00	Hz	At once
F8-20	0xF814	Frequency detection hysteresis (FDT1)	0.0 to 100.0	5.0	%	At once
F8-21	0xF815	Frequency detection amplitude	0.0 to 100.0	0.0	%	At once
F8-25	0xF819	Switchover frequency between acceleration time 1 and acceleration time 2	0.00 to F0-10	0.00	Hz	At once
F8-26	0xF81A	Switchover frequency between deceleration time 1 and deceleration time 2	0.00 to F0-10	0.00	Hz	At once
F8-27	0xF81B	Jog control through terminal with priority	0: Disable 1: Enable	0	-	At once
F8-30	0xF81E	Base value 1 of frequency detection	0.00 to F0-10	50.00	Hz	At once
F8-31	0xF81F	Frequency detection amplitude 1	0.0 to 100.0	0.0	%	At once
F8-34	0xF822	Zero current detection value	0.0 to 300.0	5.0	%	At once
F8-35	0xF823	Zero current detection delay	0.01 to 600.00	0.10	-	At once

Parameter code	Communication address	Parameter name	Value range	Default	Unit	Change mode
F8-36	0xF824	Output current overlimit threshold	0.0 to 300.0	200.0	%	At once
F8-37	0xF825	Delay of output current overlimit detection	0.00 to 600.00	0.00	-	At once
F8-38	0xF826	Base value 1 of current detection	0.0 to 300.0	100.0	%	At once
F8-39	0xF827	Current detection amplitude 1	0.0 to 300.0	0.0	%	At once
F8-42	0xF82A	Timing function	0: Disable 1: Enable	0	-	At stop
F8-43	0xF82B	Timing operation setting source	0: F8-44 1: AI1 2: External operating panel potentiometer (applicable only to single-phase MD200SXX/ MD200SXX-NC models)	0	-	At stop
F8-44	0xF82C	Timing operation duration	0.0 to 6500.0	0.0	min	At stop
F8-45	0xF82D	Lower limit of AI1 input voltage protection value	0.00 to F8-46	3.10	V	At once
F8-46	0xF82E	Upper limit of AI1 input voltage protection value	F8-45 to 11.00	6.80	V	At once
F8-48	0xF830	Cooling fan control	0: The fan keeps working during operation of the drive. 1: The fan always works. 2: The fan works at specified temperature.	0	-	At once
F8-49	0xF831	Wakeup frequency (applicable only to single-phase MD200SXX/ MD200SXX-NC models)	F8-51 to F0-10	0.00	Hz	At once

Parameter code	Communication address	Parameter name	Value range	Default	Unit	Change mode
F8-50	0xF832	Wakeup delay (applicable only to single-phase MD200SXX/ MD200SXX-NC models)	0.0 to 6500.0	0.0	-	At once
F8-51	0xF833	Hibernation frequency (applicable only to single-phase MD200SXX/ MD200SXX-NC models)	0.00 to F8-49	0.00	Hz	At once
F8-52	0xF834	Hibernation delay (applicable only to single-phase MD200SXX/ MD200SXX-NC models)	0.0 to 6500.0	0.0	-	At once
F8-53	0xF835	Present running time reach settings	0.0 to 6500.0	0.0	min	At stop
F8-54	0xF836	Output power correction coefficient	0.0 to 200.0	100.0	%	At once
F8-55	0xF837	Deceleration time for emergency stop	0.0 to 6500.0	10.0	-	At once
F8-57	0xF839	Speed proportional synchronous control	0: Disable 1: Enable	0	-	At stop
F8-58	0xF83A	Master/Slave selection in synchronous control	0: Master 1: Slave	0	-	At stop
Group F9: fault and protection						
F9-00	0xF900	Motor overload protection selection	0: Disable 1: Enable	1	-	At once
F9-01	0xF901	Motor overload protection gain	0.20 to 10.00	1.00	-	At once
F9-02	0xF902	Motor overload warning coefficient	50 to 100	80	%	At once

Parameter code	Communication address	Parameter name	Value range	Default	Unit	Change mode
F9-07	0xF907	Protection against short circuit to ground	0 to 1	1	-	At once
F9-08	0xF908	Braking unit action start voltage	310.0 to 800.0	378.0 (applicable to single-phase MD200SXX/ MD200SXX-NC models) 700.0 (applicable to three-phase MD200TXX/ MD200TXX-NC models)	V	At once
F9-09	0xF909	Number of automatic fault resets	0 to 20	0	-	At once
F9-10	0xF90A	Relay action selection upon automatic reset	0: Disable 1: Enable	0	-	At once
F9-11	0xF90B	Time interval between automatic fault reset	0.1 to 100.0	1.0	-	At once
F9-12	0xF90C	Input phase loss protection (applicable only to MD200TXX models)	0: Disabled 1: Enabled	1	-	At once
F9-13	0xF90D	Output phase loss protection	0: Disable 1: Enable	1	-	At once

Parameter code	Communication address	Parameter name	Value range	Default	Unit	Change mode
F9-14	0xF90E	Type of the 1st fault	0: No fault 1: Reserved (Err01) 2: Overcurrent during acceleration (Err02) 3: Overcurrent during deceleration (Err03) 4: Overcurrent during operation at constant speed (Err04) 5: Overvoltage during acceleration (Err05) 6: Overvoltage during deceleration (Err06) 7: Overvoltage during operation at constant speed (Err07) 8: Pre-charge resistor overload (Err08) 9: Undervoltage (Err09) 10: AC drive overload (Err10) 11: Motor overload (Err11) 12: Input phase loss (Err12) 13: Output phase loss (Err13) 14: Module overtemperature (Err14) 15: External fault (Err15) 16: Communication error (Err16) 17: Reserved (Err17) 18: Current detection error (Err18) 19: Motor parameter auto-tuning error (Err19) 20: Reserved (Err20) 21: Parameter read/write error (Err21) 22: Reserved (Err22) 23: Motor short circuit to ground (Err23) Continued	0	-	Unchangeable

Parameter code	Communication address	Parameter name	Value range	Default	Unit	Change mode
Same as above	Same as above	Same as above	Continued 24: Reserved (Err24) 25: Reserved (Err25) 26: Operating time reached (Err26) 27: User-defined fault 1 (Err27) 28: User-defined fault 2 (Err28) 29: Power-on time reached (Err29) 30: Load loss (Err30) 31: PID feedback loss during running (Err31) 32 to 39: Reserved (Err32 to Err39) 40: Fast current limit timeout (Err40) 41: Reserved (Err41) 42: Excessive speed deviation (Err42) 43 to 53: Reserved (Err43 to Err53) 55: Slave fault in master/slave control (Err55)	Same as above	Same as above	Same as above
F9-15	0xF90F	Type of the 2nd fault	Same as F9-14	0	-	Unchangeable
F9-16	0xF910	Type of the 3rd (latest) fault	Same as F9-14	0	-	Unchangeable
F9-17	0xF911	Frequency upon the latest fault	0.00 to 655.35	0.00	Hz	Unchangeable
F9-18	0xF912	Current upon the latest fault	0.00 to 655.35	0.00	A	Unchangeable
F9-19	0xF913	Bus voltage upon the latest fault	0.0 to 6553.5	0.0	V	Unchangeable
F9-20	0xF914	Input terminal state upon the latest fault	0 to 9999	0	-	Unchangeable
F9-21	0xF915	Output terminal state upon the latest fault	0 to 9999	0	-	Unchangeable
F9-22	0xF916	AC drive state upon the latest fault	0 to 65535	0	-	Unchangeable
F9-23	0xF917	Power-on time upon the latest fault	0 to 65535	0	min	Unchangeable
F9-24	0xF918	Running time upon the latest fault	0.0 to 6553.5	0.0	min	Unchangeable
F9-27	0xF91B	Frequency upon the 2nd fault	0.00 to 655.35	0.00	Hz	Unchangeable

Parameter code	Communication address	Parameter name	Value range	Default	Unit	Change mode
F9-28	0xF91C	Current upon the 2nd fault	0.00 to 655.35	0.00	A	Unchangeable
F9-29	0xF91D	Bus voltage upon the 2nd fault	0.0 to 6553.5	0.0	V	Unchangeable
F9-30	0xF91E	Input terminal state upon the 2nd fault	0 to 9999	0	-	Unchangeable
F9-31	0xF91F	Output terminal state upon the 2nd fault	0 to 9999	0	-	Unchangeable
F9-32	0xF920	AC drive state upon the 2nd fault	0 to 65535	0	-	Unchangeable
F9-33	0xF921	Power-on time upon the 2nd fault	0 to 65535	0	min	Unchangeable
F9-34	0xF922	Running time upon the 2nd fault	0 to 65535	0	min	Unchangeable
F9-37	0xF925	Frequency upon the 1st fault	0.00 to 655.35	0.00	Hz	Unchangeable
F9-38	0xF926	Current upon the 1st fault	0.00 to 655.35	0.00	A	Unchangeable
F9-39	0xF927	Bus voltage upon the 1st fault	0.0 to 6553.5	0.0	V	Unchangeable
F9-40	0xF928	Input terminal state upon the 1st fault	0 to 9999	0	-	Unchangeable
F9-41	0xF929	Output terminal state upon the 1st fault	0 to 9999	0	-	Unchangeable
F9-42	0xF92A	AC drive state upon the 1st fault	0 to 65535	0	-	Unchangeable
F9-43	0xF92B	Power-on time upon the 1st fault	0 to 65535	0	min	Unchangeable
F9-44	0xF92C	Running time upon the 1st fault	0 to 65535	0	min	Unchangeable

Parameter code	Communication address	Parameter name	Value range	Default	Unit	Change mode
F9-47	0xF92F	Fault protection action selection 1	Ones: Motor overload (Err11) 0: Coast to stop 1: Stop according to the stop mode 2: Continue to run Tens: Input phase loss (Err12) 0: Coast to stop 1: Stop according to the stop mode 2: Continue to run Hundreds: Output phase loss (Err13) 0: Coast to stop 1: Stop according to the stop mode 2: Continue to run Thousands: External fault (Err15) 0: Coast to Stop 1: Stop according to the stop mode 2: Continue to run Ten thousands: Communication error (Err16) 0: Coast to Stop 1: Stop according to the stop mode 2: Continue to run	0	-	At once
F9-48	0xF930	Fault protection action selection 2	Ones: Reserved 0: Coast to stop Tens: Parameter read/write error (Err21) 0: Coast to stop 1: Stop according to the stop mode Hundreds: Reserved 0: Coast to stop 1: Stop according to the stop mode Thousands: Reserved 0: Coast to stop 1: Stop according to the stop mode 2: Continue to run Ten thousands: Running time reach (Err26) 0: Coast to stop 1: Stop according to the stop mode 2: Continue to run	0	-	At once

Parameter code	Communication address	Parameter name	Value range	Default	Unit	Change mode
F9-49	0xF931	Fault protection action selection 3	Ones: User-defined fault 1 (Err27) 0: Coast to stop 1: Stop according to the stop mode 2: Continue to run Tens: User-defined fault 2 (Err28) 0: Coast to stop 1: Stop according to the stop mode 2: Continue to run Hundreds: Power-on time reach (Err29) 0: Coast to stop 1: Stop according to the stop mode 2: Continue to run Thousands: Load loss (Err30) 0: Coast to stop 1: Decelerate to stop 2: Decelerate to 7% of the rated motor frequency and continue to run; resume to the frequency reference if the load recovers Ten thousands: PID feedback loss during operation (Err31) 0: Coast to stop 1: Stop according to the stop mode 2: Continue to run	0	-	At once
F9-54	0xF936	Frequency for continuing to run upon fault	0: Current running frequency 1: Frequency reference 2: Frequency upper limit 3: Frequency lower limit 4: Backup frequency upon fault	0	-	At once
F9-55	0xF937	Backup frequency upon fault	0.0 to 100.0	100.0	%	At once
F9-59	0xF93B	Power dip ride-through function	0: Disabled 1: Bus voltage constant control 2: Decelerate to stop	0	-	At stop
F9-60	0xF93C	Threshold for recovery from power dip ride-through	80 to 100	85	%	At stop
F9-61	0xF93D	Duration for judging voltage recovery from power dip ride-through	0.0 to 100.0	0.5	-	At stop

Parameter code	Communication address	Parameter name	Value range	Default	Unit	Change mode
F9-62	0xF93E	Threshold for enabling power dip ride-through	60 to F9-60	80	%	At stop
F9-63	0xF93F	Protection against load loss	0: Disable 1: Enable	0	-	At once
F9-64	0xF940	Load loss detection value	0.0 to 100.0	10.0	%	At once
F9-65	0xF941	Load loss detection time	0.0 to 60.0	1.0	-	At once
F9-71	0xF947	Power dip ride-through gain Kp	0 to 100	40	-	At once
F9-72	0xF948	Integral coefficient Ki of power dip ride-through	0 to 100	30	-	At once
F9-73	0xF949	Deceleration time of power dip ride-through	0.0 to 300.0	20.0	-	At stop
F9-74	0xF94A	Restart mode after fault reset	0 to 1	0	-	At once
Group FA: PID function						
FA-00	0xFA00	PID reference source	0: FA-01 1: AI1 2: External operating panel potentiometer 3: Reserved 4: Pulse (DI4 for MD200XXX models and DI/DO for MD200XXX-NC models) 5: Communication 6: Multi-reference	0	-	At once
FA-01	0xFA01	PID digital reference	0.0 to 100.0	50.0	%	At once

Parameter code	Communication address	Parameter name	Value range	Default	Unit	Change mode
FA-02	0xFA02	PID feedback source	0: AI1 1: External operating panel potentiometer 2: Reserved 3: AI1 - External operating panel potentiometer 4: Pulse (DI4 for MD200XXX models and DI/DO for MD200XXX-NC models) 5: Communication 6: AI1 + External operating panel potentiometer (applicable only to single-phase MD200SXX/ MD200SXX-NC models) 7: Max. (|AI1|, |external operating panel potentiometer|) (applicable only to single-phase MD200SXX/ MD200SXX-NC models) 8: Min. (|AI1|, |external operating panel potentiometer|) (applicable only to single-phase MD200SXX/ MD200SXX-NC models)	0	-	At once
FA-03	0xFA03	PID action direction	0: Positive 1: Negative	0	-	At once
FA-04	0xFA04	PID reference feedback range	0 to 65535	1000	-	At once
FA-05	0xFA05	Proportional gain Kp1	0.0 to 1000.0	20.0	-	At once
FA-06	0xFA06	Integral time Ti1	0.01 to 10.00	2.00	-	At once
FA-07	0xFA07	Differential time Td1	0.000 to 10.000	0.000	-	At once
FA-08	0xFA08	PID reverse cut-off frequency	0.00 to F0-10	0.00	Hz	At once
FA-09	0xFA09	PID deviation limit	0.0 to 100.0	0.0	%	At once
FA-10	0xFA0A	PID differential limit	0.00 to 100.00	0.10	%	At once
FA-11	0xFA0B	PID reference change time	0.00 to 650.00	0.00	-	At once
FA-12	0xFA0C	PID feedback filter time	0.00 to 60.00	0.00	-	At once
FA-13	0xFA0D	PID output filter time	0.00 to 60.00	0.00	-	At once
FA-15	0xFA0F	Proportional gain Kp2	0.0 to 1000.0	20.0	-	At once
FA-16	0xFA10	Integral time Ti2	0.01 to 10.00	2.00	-	At once

Parameter code	Communication address	Parameter name	Value range	Default	Unit	Change mode
FA-17	0xFA11	Differential time Td2	0.000 to 10.000	0.000	-	At once
FA-18	0xFA12	PID parameter switchover condition	0: Disable switchover 1: Switchover by DI 2: Automatic switchover based on deviation 3: Automatic switchover based on operating frequency	0	-	At once
FA-19	0xFA13	PID parameter switchover deviation 1	0.0 to FA-20	20.0	%	At once
FA-20	0xFA14	PID parameter switchover deviation 2	FA-19 to 100.0	80.0	%	At once
FA-21	0xFA15	PID initial value	0.0 to 100.0	0.0	%	At once
FA-22	0xFA16	PID initial value active time	0.00 to 650.00	0.00	-	At once
FA-23	0xFA17	Maximum deviation between two PID outputs	0.00 to 100.00	1.00	%	At once
FA-24	0xFA18	Minimum deviation between two PID outputs	0.00 to 100.00	1.00	%	At once
FA-25	0xFA19	PID integral property	Ones: Integral separation 0: Inactive 1: Active Tens: Whether integral operations stop when the output reaches the limit 0: Continue integral operation 1: Stop integral operation	0	-	At once
FA-26	0xFA1A	Detection value of PID feedback loss	0.0 to 100.0	0.0	%	At once
FA-27	0xFA1B	Detection time of PID feedback loss	0.0 to 20.0	0.0	-	At once
FA-28	0xFA1C	PID operation at stop	0: Disable 1: Enable	0	-	At once
Group FB: wobble frequency, fixed length, and count						
FB-00	0xFB00	Wobble frequency setting mode	0: Relative to the central frequency 1: Relative to the maximum frequency	0	-	At once

Parameter code	Communication address	Parameter name	Value range	Default	Unit	Change mode
FB-01	0xFB01	Wobble frequency amplitude	0.0 to 100.0	0.0	%	At once
FB-02	0xFB02	Jump frequency amplitude	0.0 to 50.0	0.0	%	At once
FB-03	0xFB03	Wobble frequency cycle	0.1 to 3000.0	10.0	-	At once
FB-04	0xFB04	Triangular wave rise time of wobble frequency	0.1 to 100.0	50.0	%	At once
FB-05	0xFB05	Reference length	0 to 65535	1000	(m)	At once
FB-06	0xFB06	Actual length	0 to 65535	0	(m)	Unchangeable
FB-07	0xFB07	Number of pulses per meter	0.1 to 6553.5	100.0	-	At once
FB-08	0xFB08	Set count value	1 to 65535	1000	-	At once
FB-09	0xFB09	Designated count value	1 to 65535	1000	-	At once
Group FC: multi-reference and simple PLC						
FC-00	0xFC00	Multi-reference 0	-100.0 to 100.0	0.0	%	At once
FC-01	0xFC01	Multi-reference 1	-100.0 to 100.0	0.0	%	At once
FC-02	0xFC02	Multi-reference 2	-100.0 to 100.0	0.0	%	At once
FC-03	0xFC03	Multi-reference 3	-100.0 to 100.0	0.0	%	At once
FC-04	0xFC04	Multi-reference 4	-100.0 to 100.0	0.0	%	At once
FC-05	0xFC05	Multi-reference 5	-100.0 to 100.0	0.0	%	At once
FC-06	0xFC06	Multi-reference 6	-100.0 to 100.0	0.0	%	At once
FC-07	0xFC07	Multi-reference 7	-100.0 to 100.0	0.0	%	At once
FC-16	0xFC10	Simple PLC operation mode	0: Stop after operating for one cycle 1: Keep final values after operating for one cycle 2: Cycle operation	0	-	At once

Parameter code	Communication address	Parameter name	Value range	Default	Unit	Change mode
FC-17	0xFC11	Simple PLC retention selection upon power failure	Ones: Retentive selection upon power failure 0: Non-retentive upon power failure 1: Retentive upon power failure Tens: Retentive selection upon stop 0: Non-retentive upon stop 1: Retentive upon stop	0	-	At once
FC-18	0xFC12	Operation time of multi-reference 0 set by simple PLC	0.0 to 6500.0	0.0	s (h)	At once
FC-19	0xFC13	Acceleration/ Deceleration time of multi-reference 0 set by PLC	0 to 1	0	-	At once
FC-20	0xFC14	Operation time of multi-reference 1 set by simple PLC	0.0 to 6500.0	0.0	s (h)	At once
FC-21	0xFC15	Acceleration/ Deceleration time of multi-reference 1 set by PLC	0 to 1	0	-	At once
FC-22	0xFC16	Operation time of multi-reference 2 set by simple PLC	0.0 to 6500.0	0.0	s (h)	At once
FC-23	0xFC17	Acceleration/ Deceleration time of multi-reference 2 set by PLC	0 to 1	0	-	At once
FC-24	0xFC18	Operation time of multi-reference 3 set by simple PLC	0.0 to 6500.0	0.0	s (h)	At once
FC-25	0xFC19	Acceleration/ Deceleration time of multi-reference 3 set by PLC	0 to 1	0	-	At once

Parameter code	Communication address	Parameter name	Value range	Default	Unit	Change mode
FC-26	0xFC1A	Operation time of multi-reference 4 set by simple PLC	0.0 to 6500.0	0.0	s (h)	At once
FC-27	0xFC1B	Acceleration/ Deceleration time of multi-reference 4 set by PLC	0 to 1	0	-	At once
FC-28	0xFC1C	Operation time of multi-reference 5 set by simple PLC	0.0 to 6500.0	0.0	s (h)	At once
FC-29	0xFC1D	Acceleration/ Deceleration time of multi-reference 5 set by PLC	0 to 1	0	-	At once
FC-30	0xFC1E	Operation time of multi-reference 6 set by simple PLC	0.0 to 6500.0	0.0	s (h)	At once
FC-31	0xFC1F	Acceleration/ Deceleration time of multi-reference 6 set by PLC	0 to 1	0	-	At once
FC-32	0xFC20	Operation time of multi-reference 7 set by simple PLC	0.0 to 6500.0	0.0	s (h)	At once
FC-33	0xFC21	Acceleration/ Deceleration time of multi-reference 7 set by PLC	0 to 1	0	-	At once
FC-50	0xFC32	PLC operating time unit	0: Second (s) 1: Hour (h)	0	-	At once

Parameter code	Communication address	Parameter name	Value range	Default	Unit	Change mode
FC-51	0xFC33	Multi-reference 0 setting mode	0: FC-00 1: AI1 2: External operating panel potentiometer 3: Reserved 4: Pulse (DI4 for MD200XXX models and DI/DO for MD200XXX-NC models) 5: PID 6: Preset frequency (F0-08)	0	-	At once
Group FD: communication parameters						
FD-00	0xFD00	Baud rate	Ones: Modbus 0: 300 bps 1: 600 bps 2: 1200 bps 3: 2400 bps 4: 4800 bps 5: 9600 bps 6: 19200 bps 7: 38400 bps 8: 57600 bps 9: 115200 bps Tens: Reserved Hundreds: Reserved Thousands: CANlink baud rate 0: 20 kbps 1: 50 kbps 2: 100 kbps 3: 125 kbps 4: 250 kbps 5: 500 kbps	5005	-	At once
FD-01	0xFD01	Modbus data format	0: No check (8-N-2) 1: Even parity check (8-E-1) 2: Odd parity check (8-O-1) 3: No check (8-N-1)	0	-	At once
FD-02	0xFD02	Local address	0 to 247	1	-	At once
FD-03	0xFD03	Modbus response delay	0 to 20	2	ms	At once
FD-04	0xFD04	Communication timeout time	0.0 to 60.0	0.0	-	At once
FD-05	0xFD05	Data transmission protocol	0: Non-standard Modbus protocol 1: Standard Modbus protocol	1	-	At once

Parameter code	Communication address	Parameter name	Value range	Default	Unit	Change mode
FD-06	0xFD06	Current resolution read through communication	0: 0.01 A (active when the power is lower than or equal to 55 kW) 1: 0.1 A (active when the power is higher than 55 kW)	0	-	At once
FD-07	0xFD07	Software selection	0: RS485 1: Software	0	-	At once
Group FE: user-defined parameters (applicable only to three-phase MD200TX/MD200TXX-NC models)						
FE-00	0x2F00	User-defined parameter 0	0 to 65535	0	-	At once
FE-01	0x2F01	User-defined parameter 1	0 to 65535	0	-	At once
FE-02	0x2F02	User-defined parameter 2	0 to 65535	0	-	At once
FE-03	0x2F03	User-defined parameter 3	0 to 65535	0	-	At once
FE-04	0x2F04	User-defined parameter 4	0 to 65535	0	-	At once
FE-05	0x2F05	User-defined parameter 5	0 to 65535	0	-	At once
FE-06	0x2F06	User-defined parameter 6	0 to 65535	0	-	At once
FE-07	0x2F07	User-defined parameter 7	0 to 65535	0	-	At once
FE-08	0x2F08	User-defined parameter 8	0 to 65535	0	-	At once
FE-09	0x2F09	User-defined parameter 9	0 to 65535	0	-	At once
FE-10	0x2F0A	User-defined parameter 10	0 to 65535	0	-	At once
FE-11	0x2F0B	User-defined parameter 11	0 to 65535	0	-	At once
FE-12	0x2F0C	User-defined parameter 12	0 to 65535	0	-	At once
FE-13	0x2F0D	User-defined parameter 13	0 to 65535	0	-	At once
FE-14	0x2F0E	User-defined parameter 14	0 to 65535	0	-	At once
FE-15	0x2F0F	User-defined parameter 15	0 to 65535	0	-	At once
FE-16	0x2F10	User-defined parameter 16	0 to 65535	0	-	At once
FE-17	0x2F11	User-defined parameter 17	0 to 65535	0	-	At once

Parameter code	Communication address	Parameter name	Value range	Default	Unit	Change mode
FE-18	0x2F12	User-defined parameter 18	0 to 65535	0	-	At once
FE-19	0x2F13	User-defined parameter 19	0 to 65535	0	-	At once
FE-20	0x2F14	User-defined parameter 20	0 to 65535	0	-	At once
FE-21	0x2F15	User-defined parameter 21	0 to 65535	0	-	At once
FE-22	0x2F16	User-defined parameter 22	0 to 65535	0	-	At once
FE-23	0x2F17	User-defined parameter 23	0 to 65535	0	-	At once
FE-24	0x2F18	User-defined parameter 24	0 to 65535	0	-	At once
FE-25	0x2F19	User-defined parameter 25	0 to 65535	0	-	At once
FE-26	0x2F1A	User-defined parameter 26	0 to 65535	0	-	At once
FE-27	0x2F1B	User-defined parameter 27	0 to 65535	0	-	At once
FE-28	0x2F1C	User-defined parameter 28	0 to 65535	0	-	At once
FE-29	0x2F1D	User-defined parameter 29	0 to 65535	0	-	At once
FE-30	0x2F1E	User-defined parameter 30	0 to 65535	0	-	At once
FE-31	0x2F1F	User-defined parameter 31	0 to 65535	0	-	At once
Group FP: parameter management						
FP-00	0x1F00	User password	0 to 65535	0	-	At once
FP-01	0x1F01	Parameter initialization	0: No operation 1: Restore to default settings (excluding motor parameters) 2: Clear records 4: Back up current user parameters 501: Restore user backup parameters	0	-	At stop
FP-02	0x1F02	Parameter group display	Ones: Parameter group U display 0: Not displayed 1: Displayed Tens: Parameter group A display 0: Not displayed 1: Displayed	11	-	At once

Parameter code	Communication address	Parameter name	Value range	Default	Unit	Change mode
FP-03	0x1F03	Customized parameter group display	Ones: Display of user-defined parameter group 0: Not displayed 1: Displayed Tens: Display of user-modified parameter group 0: Not displayed 1: Displayed	11	-	At once
FP-04	0x1F04	Parameter modification	0: Modification allowed 1: Modification prohibited	0	-	At once
Group A1: virtual IO						

Parameter code	Communication address	Parameter name	Value range	Default	Unit	Change mode
A1-07	0xA107	Function selection for AI1 used as DI	0: No function 1: Forward run (FWD) 2: Reverse run (REV) 3: Three-wire operation control 4: Forward jog (FJOG) 5: Reverse jog (RJOG) 6: Function as the UP key 7: Function as the DOWN key 8: Coast to stop 9: Fault reset (RESET) 10: Operation pause 11: External fault NO input 12: Multi-reference terminal 1 13: Multi-reference terminal 2 14: Multi-reference terminal 3 15: Multi-reference terminal 4 16: Acceleration/Deceleration time selection terminal 1 17: Reserved 18: Frequency reference switchover 19: Clear information set by UP/DOWN keys on the operating panel or by terminals functioning as the UP/DOWN keys 20: Control command switchover terminal 1 21: Acceleration/Deceleration inhibited 22: PID pause 23: Simple PLC state reset 24: Wobble frequency pause 25: Counter input 26: Counter reset 27: Length counting input 28: Length reset 29: Reserved Continued	0	-	At stop

Parameter code	Communication address	Parameter name	Value range	Default	Unit	Change mode
Same as above	Same as above	Same as above	Continued 30: Pulse frequency input (DI4 for MD200XXX models and DI/DO for MD200XXX-NC models) 31: Reserved 32: Immediate DC braking 33: External fault NC input 34: Frequency modification enable 35: PID action direction reversal 36: External stop terminal 1 37: Control command switchover terminal 2 38: PID integral pause 39: Switch main frequency source to preset frequency 40: Switch auxiliary frequency source to preset frequency	Same as above	Same as above	Same as above
Same as above	Same as above	Same as above	Continued 41: Reserved 42: Reserved 43: PID parameter switchover 44: User-defined fault 1 45: User-defined fault 2 46: Reserved 47: Emergency stop 48: External stop terminal 2 49: Deceleration DC braking 50: Clear the current running time 51: Two-wire/Three-wire mode switchover 52: Reverse frequency inhibited	Same as above	Same as above	Same as above
A1-10	0xA10A	Active mode for AI used as DI	0: Active high 1: Active low	0	-	At stop
Group A5: control optimization parameters						
A5-00	0xA500	Frequency upper limit for DPWM switchover	0.00 to F0-10	12.00	Hz	At once
A5-02	0xA502	Dead zone compensation mode	0: No compensation 1: Compensation mode 1	1	-	At once
A5-03	0xA503	Random PWM depth	0 to 10	3	-	At once
A5-04	0xA504	Pulse-by-pulse current limit	0: Disable 1: Enable	1	-	At once
A5-05	0xA505	Overmodulation coefficient	100 to 110	103	%	At stop

Parameter code	Communication address	Parameter name	Value range	Default	Unit	Change mode
A5-06	0xA506	Undervoltage threshold	140.0 to 420.0	170.0 (applicable to single-phase MD200SXX/ MD200SXX-NC models) 350.0 (applicable to three-phase MD200TXX/ MD200TXX-NC models)	V	At once
A5-08	0xA508	Carrier frequency upper limit at low speed (applicable only to three-phase MD200TXX/ MD200TXX-NC models)	0.0 to 6.0	0.0	kHz	At once
A5-09	0xA509	Overvoltage threshold	300.0 to 820.0	410.0 (applicable to single-phase MD200SXX/ MD200SXX-NC models) 820.0 (applicable to three-phase MD200TXX/ MD200TXX-NC models)	V	At stop
Group A6: AI curve setting						
A6-24	0xA618	AI1 jump point	-100.0 to 100.0	0.0	%	At once
A6-25	0xA619	AI1 jump amplitude	0.0 to 100.0	0.5	%	At once
A6-26	0xA61A	Jump point of external operating panel potentiometer	-100.0 to 100.0	0.0	%	At once

Parameter code	Communication address	Parameter name	Value range	Default	Unit	Change mode
A6-27	0xA61B	Jump amplitude of external operating panel potentiometer	0.0 to 100.0	0.5	%	At once
Group AC: AI/AO correction						
AC-00	0xAC00	Measured voltage 1 of AI1	-10.000 to 10.000	2.000	V	At once
AC-01	0xAC01	Displayed voltage 1 of AI1	-10.000 to 10.000	2.000	V	At once
AC-02	0xAC02	Measured voltage 2 of AI1	-10.000 to 10.000	8.000	V	At once
AC-03	0xAC03	Displayed voltage 2 of AI1	-10.000 to 10.000	8.000	V	At once
AC-12	0xAC0C	Target voltage 1 of AO1	-10.000 to 10.000	2.000	V	At once
AC-13	0xAC0D	Measured voltage 1 of AO1	-10.000 to 10.000	2.000	V	At once
AC-14	0xAC0E	Target voltage 2 of AO1	-10.000 to 10.000	8.000	V	At once
AC-15	0xAC0F	Measured voltage 2 of AO1	-10.000 to 10.000	8.000	V	At once
Group U0: basic monitoring parameters						
U0-00	0x7000	Running frequency (Hz)	0.00 to 500.00	0.00	Hz	Unchangeable
U0-01	0x7001	Frequency reference (Hz)	0.00 to 500.00	0.00	Hz	Unchangeable
U0-02	0x7002	Bus voltage (V)	0.0 to 3000.0	0.0	V	Unchangeable
U0-03	0x7003	Output voltage (V)	0 to 1140	0	V	Unchangeable
U0-04	0x7004	Output current (A)	0.00 to 655.35	0.00	A	Unchangeable
U0-05	0x7005	Output power (kW)	0.0 to 3276.7	0.0	kW	Unchangeable
U0-06	0x7006	Output torque (%)	-200.0 to 200.0	0.0	%	Unchangeable
U0-07	0x7007	DI input state	0 to 32767	0	-	Unchangeable
U0-08	0x7008	DO output state	0 to 32767	0	-	Unchangeable
U0-09	0x7009	AI1 voltage (V)	-10.57 to 10.57	0.00	V	Unchangeable
U0-10	0x700A	Communication protocol	0 to 1	0	-	Unchangeable

Parameter code	Communication address	Parameter name	Value range	Default	Unit	Change mode
U0-11	0x700B	Voltage (V) input through external operating panel potentiometer	-10.57 to 10.57	0.00	V	Unchangeable
U0-12	0x700C	Count value (applicable only to single-phase MD200SXX models)	0 to 65535	0	-	Unchangeable
U0-13	0x700D	Length value (applicable only to single-phase MD200SXX models)	0 to 65535	0	-	Unchangeable
U0-14	0x700E	Load speed display	0 to 65535	0	RPM	Unchangeable
U0-15	0x700F	PID reference	0 to 65535	0	%	Unchangeable
U0-16	0x7010	PID feedback	0 to 65535	0	%	Unchangeable
U0-17	0x7011	PLC stage	0 to 65535	0	-	Unchangeable
U0-18	0x7012	Pulse input frequency (kHz)	0.00 to 100.00	0.00	kHz	Unchangeable
U0-19	0x7013	Feedback speed (Hz)	-5000.0 to 5000.0	0.0	Hz	Unchangeable
U0-20	0x7014	Remaining running time (min.)	0.0 to 6500.0	0.0	min	Unchangeable
U0-21	0x7015	AI1 voltage before correction (V)	-10.570 to 10.570	0.000	V	Unchangeable
U0-22	0x7016	External operating panel potentiometer voltage before correction (V)	-10.570 to 10.570	0.000	V	Unchangeable
U0-24	0x7018	Linear speed	0 to 65535	0	m/min	Unchangeable
U0-25	0x7019	Current power-on time (min.)	0 to 65535	0	min	Unchangeable
U0-26	0x701A	Current running time (min.)	0.0 to 6553.5	0.0	min	Unchangeable
U0-27	0x701B	Pulse input frequency (Hz)	0 to 65535	0	Hz	Unchangeable

Parameter code	Communication address	Parameter name	Value range	Default	Unit	Change mode
U0-28	0x701C	Reference value set through communication	-100.00 to 100.00	0.00	%	Unchangeable
U0-30	0x701E	Main frequency X display (Hz)	-500.00 to 500.00	0.00	Hz	Unchangeable
U0-31	0x701F	Auxiliary frequency Y display (Hz)	-500.00 to 500.00	0.00	Hz	Unchangeable
U0-32	0x7020	Memory address view	0 to 65535	0	-	Unchangeable
U0-34	0x7022	Motor temperature	0 to 200	0	℃	Unchangeable
U0-35	0x7023	Target torque (%) (applicable only to single-phase MD200SXX models)	-200.0 to 200.0	0.0	%	Unchangeable
U0-37	0x7025	Power factor angle	0.0 to 6553.5	0.0	°	Unchangeable
U0-39	0x7027	Target voltage in V/f decoupled mode	0 to 65535	0	V	Unchangeable
U0-40	0x7028	Output voltage in V/f decoupled mode	0 to 65535	0	V	Unchangeable
U0-45	0x702D	Fault subcode	0 to 65535	0	-	Unchangeable
U0-61	0x703D	AC drive state	0 to 65535	0	-	Unchangeable
U0-62	0x703E	Fault code	0 to 99	0	-	Unchangeable
U0-65	0x7041	Torque upper limit (%) (applicable only to single-phase MD200SXX models)	-200.0 to 200.0	0.0	%	Unchangeable
U0-69	0x7045	Motor rotation frequency	0.00 to 655.35	0.00	Hz	Unchangeable
U0-70	0x7046	Motor speed	-32767 to 32767	0	RPM	Unchangeable
U0-71	0x7047	Communication card-specific current (A)	0.0 to 6553.5	0.0	A	Unchangeable

Parameter code	Communication address	Parameter name	Value range	Default	Unit	Change mode
U0-74	0x704A	Actual motor output torque	0.0 to 6553.5	0.0	%	Unchangeable
U0-77	0x704D	Pre-charge mark	0 to 1	0	-	Unchangeable
U0-78	0x704E	Linear speed (applicable only to single-phase MD200SXX models)	0 to 65535	0	m/min	Unchangeable

9 Parameter Group

9.1 F0 Basic Functions

F0-01 **Motor 1 control mode**

Address:	0xF001	Effective mode:	Real time
Min.:	2	Unit:	-
Max.:	2	Data type:	UInt16
Default mode:	2	Change mode:	Unchangeable:

Range:

2: V/f control

Parameter description

2: V/f control (open loop speed control)

It is applicable to applications with no high requirements on load control performance, such as fans and pumps. If one drive is used to control multiple motors, only the V/f control mode can be used.

F0-02 **Command source**

Address:	0xF002	Effective mode:	Real time
Min.:	0	Unit:	-
Max.:	2	Data type:	UInt16
Default mode:	0	Change mode:	At once

Range:

0: Operation panel (indicator OFF)

1: Terminal (indicator ON)

2: Communication (indicator blinking)

Parameter description

This parameter specifies the source of the AC drive running commands, including start/stop, forward run, reverse run, and jog.

0: Operating panel (indicator OFF)

Control commands are input by using the RUN, STOP/RES, and MF.K keys on the operating panel. It is applicable to initial commissioning.

1: Terminal (indicator ON)
Control commands are input through the DIs of the AC drive. The control commands input through the DIs can be set according to different scenarios, such as start/stop, forward/reverse run, jog, two-wire/three-wire mode, and multi-speed. It is suitable for most applications.
2: Communication (indicator blinking)
Control commands are input through remote communication. The drive communicates with the host controller through Modbus or CANlink. This mode is suitable for remote control or centralized control on multiple equipment.

F0-03 **Selection of main frequency source X**

Address:	0xF003	Effective mode:	Real time
Min.:	0	Unit:	-
Max.:	9	Data type:	UInt16
Default mode:	0	Change mode:	At stop

Range:
0: Digital setting (non-retentive upon power failure)
1: Digital setting (retentive upon power failure)
2: AI1
3: External operating panel potentiometer
4: Reserved
5: Pulse (DI4 for MD200XXX models and DI/DO for MD200XXX-NC models)
6: Multi-reference
7: Simple PLC
8: PID
9: Communication
Parameter description
This parameter is used to set the source of the main frequency X, as shown below.
0: Digital setting (non-retentive at power failure)
The initial value of the frequency reference is the value of F0-08 (Preset frequency). The value can be changed by using the ▲ and ▼ keys on the operating panel or the terminal functioning as the UP/DOWN keys. When the AC drive is powered on again after power-off, the frequency reference is restored to the value of F0-08.

1: Digital setting (retentive at power failure)
The initial value of the frequency reference is set by F0-08 (preset frequency). The value can be changed by using the ▲ and ▼ keys on the operating panel or the terminal functioning as the UP/DOWN keys. When the AC drive is powered on again after power-off, the frequency reference is that before the last power failure. That is, the value set by using the ▲ and ▼ keys on the operating panel or the terminal functioning as the UP/DOWN keys is retained.
2: AI1
The frequency reference is input by AI1 through current or voltage signals. The frequency is calculated according to the preset AI curve. AI curves can be set in parameter group F4.
3: External operating panel potentiometer
The frequency reference is input by the external operating panel potentiometer AI through current or voltage signals. The frequency is calculated according to the preset AI curve. AI curves can be set in parameter group F4.
4: Reserved
5: Pulse (DI4 for MD200XXX models and DI/DO for MD200XXX-NC models)
The frequency reference is set by the pulse frequency over the DI4 or DI/DO. The DI4 is applicable to MD200XXX models and DI/DO to MD200XXX-NC models. The frequency is calculated according to the relationship curve between the pulse frequency and the operating frequency.
6: Multi-reference
In multi-reference control mode, different combinations of DI terminal states correspond to different frequency references. The four multi-reference terminals (assigned with functions 12 to 15) can provide 16 states, corresponding to 16 frequencies (set by FC-00 to FC-15).
7: Simple PLC
The simple PLC is a multi-reference running command that can control the running time and the acceleration and deceleration time. Parameters FC-00 to FC-15 are used to set the values of each frequency. FC-18 to FC-49 are used to set the running time and acceleration and deceleration time of each frequency. Up to 16 frequencies can be set.

8: PID
PID is selected as the frequency reference. PID control is a common process control method, which calculates the proportion, integral, and differential of the difference between feedback signals and target signals of the controlled variable, and adjusts the output frequency of the AC drive accordingly. This method finally creates a closed-loop system to stabilize the controlled variable at the target value. Generally, PID control output can be used as the frequency reference for on-site closed-loop process control applications, such as closed-loop pressure control and closed-loop tension control. Set PID-related parameters in group FA.
9: Communication
The frequency is set through communication. The frequency can be set through remote communication (generally through address 0x7310 or 0x1000). The AC drive communicates with the host controller through Modbus (Modbus RTU communication address: 0x2000). This mode is suitable for remote control or centralized control on multiple equipment.

F0-04 **Selection of auxiliary frequency source Y**

Address:	0xF004	Effective mode:	Real time
Min.:	0	Unit:	-
Max.:	9	Data type:	UInt16
Default mode:	0	Change mode:	At stop

Range:
0: Digital setting (non-retentive upon power failure)
1: Digital setting (retentive upon power failure)
2: AI1
3: External operating panel potentiometer
4: Reserved
5: Pulse (DI4 for MD200XXX models and DI/DO for MD200XXX-NC models)
6: Multi-reference
7: Simple PLC
8: PID
9: Communication
Parameter description
This parameter is used to set the source of the auxiliary frequency X, as shown below.

0: Digital setting (non-retentive at power failure)
The initial value of the frequency reference is the value of F0-08 (Preset frequency). The value can be changed by using the ▲ and ▼ keys on the operating panel or the terminal functioning as the UP/DOWN keys. When the AC drive is powered on again after power-off, the frequency reference is restored to the value of F0-08.
1: Digital setting (retentive at power failure)
The initial value of the frequency reference is set by F0-08 (preset frequency). The value can be changed by using the ▲ and ▼ keys on the operating panel or the terminal functioning as the UP/DOWN keys. When the AC drive is powered on again after power-off, the frequency reference is that before the last power failure. That is, the value set by using the ▲ and ▼ keys on the operating panel or the terminal functioning as the UP/DOWN keys is retained.
2: AI1
The frequency reference is input by AI1 through current or voltage signals. The frequency is calculated according to the preset AI curve. AI curves can be set in parameter group F4.
3: External operating panel potentiometer
The frequency reference is input by the external operating panel potentiometer AI through current or voltage signals. The frequency is calculated according to the preset AI curve. AI curves can be set in parameter group F4.
4: Reserved
5: Pulse (DI4 for MD200XXX models and DI/DO for MD200XXX-NC models)
The frequency reference is set by the pulse frequency over the DI4 or DI/DO. The DI4 is applicable to MD200XXX models and DI/DO to MD200XXX-NC models. The frequency is calculated according to the relationship curve between the pulse frequency and the operating frequency.
6: Multi-reference
In multi-reference control mode, different combinations of DI terminal states correspond to different frequency references. The four multi-reference terminals (assigned with functions 12 to 15) can provide 16 states, corresponding to 16 frequencies (set by FC-00 to FC-15).
7: Simple PLC
The simple PLC is a multi-reference running command that can control the running time and the acceleration and deceleration time. Parameters FC-00 to FC-15 are used to set the values of each frequency. FC-18 to FC-49 are used to set the running time and acceleration and deceleration time of each frequency. Up to 16 frequencies can be set.

8: PID
PID is selected as the frequency reference. PID control is a common process control method, which calculates the proportion, integral, and differential of the difference between feedback signals and target signals of the controlled variable, and adjusts the output frequency of the AC drive accordingly. This method finally creates a closed-loop system to stabilize the controlled variable at the target value. Generally, PID control output can be used as the frequency reference for on-site closed-loop process control applications, such as closed-loop pressure control and closed-loop tension control. Set PID-related parameters in group FA.
9: Communication
The frequency is set through communication. The frequency can be set through remote communication (generally through address 0x7310 or 0x1000). The AC drive communicates with the host controller through Modbus (Modbus RTU communication address: 0x2000). This mode is suitable for remote control or centralized control on multiple equipment.

F0-05 **Base value of auxiliary frequency Y range upon superposition**

Address:	0xF005	Effective mode:	Real time
Min.:	0	Unit:	-
Max.:	1	Data type:	UInt16
Default mode:	0	Change mode:	At once

Range:
0: Relative to the maximum frequency
1: Relative to main frequency X
Parameter description
The auxiliary frequency source range is set as a percentage. This parameter is used to set the base value of the auxiliary frequency source range percentage.
0: Relative to the maximum frequency
The maximum auxiliary frequency at superposition is equal to the result of F0-06 (Range of auxiliary frequency Y upon superposition) multiplied by F0-10 (Maximum frequency).
1: Relative to main frequency X
The maximum auxiliary frequency at superposition is equal to the result of F0-06 (Range of auxiliary frequency Y upon superposition) multiplied by the main frequency.

F0-06 **Range of auxiliary frequency Y upon superposition**

Address:	0xF006	Effective mode:	Real time
Min.:	0	Unit:	%
Max.:	150	Data type:	UInt16
Default mode:	100	Change mode:	At once

Range:

0 to 150

Parameter description

This parameter sets the range of auxiliary frequency Y upon superposition.

F0-07 **Frequency superposition selection**

Address:	0xF007	Effective mode:	Real time
Min.:	0	Unit:	-
Max.:	34	Data type:	UInt16
Default mode:	0	Change mode:	At once

Range:

Ones: Frequency reference selection

0: Main frequency X

1: Main and auxiliary frequency operation result (based on tens place)

2: Switchover between the main frequency X and the auxiliary frequency Y

3: Switchover between the main frequency X and the main and auxiliary frequency operation result

4: Switchover between the auxiliary frequency Y and the main and auxiliary frequency operation result

Tens: Main and auxiliary frequency operation

0: Main frequency + Auxiliary frequency

1: Main frequency – Auxiliary frequency

2: Max. (main frequency, auxiliary frequency)

3: Min. (main frequency, auxiliary frequency)

Parameter description

This parameter is used to set the superposition mode of the main frequency X and auxiliary frequency Y.

Ones: Frequency reference selection

0: Main frequency X

The running frequency of the AC drive is determined by the main frequency X (F0-03).

1: Main and auxiliary frequency operation result (based on tens place)
The running frequency of the AC drive is the operation result of the main and auxiliary frequencies, and the operation method is determined by the tens place of F0-07.
2: Switchover between the main frequency X and the auxiliary frequency Y
The running frequency of the AC drive is selected or switched between the main frequency X and the auxiliary frequency Y through the DI terminal. In this case, the corresponding DI must be assigned with the frequency source switchover function. If the DI2 terminal is used for switchover, set F4-01 to 18.
3: Switchover between the main frequency X and the main and auxiliary frequency operation result
The running frequency of the AC drive is selected or switched between the main frequency X and the main and auxiliary frequency operation result through the DI terminal. If the DI2 terminal is used for switchover, set F4-01 to 18.
4: Switchover between the auxiliary frequency Y and the main and auxiliary frequency operation result
The running frequency of the AC drive is selected or switched between the auxiliary frequency Y and the main and auxiliary frequency operation result through the DI terminal. If the DI2 terminal is used for switchover, set F4-01 to 18.
Tens: Main and auxiliary frequency operation
0: Main frequency + Auxiliary frequency
The main and auxiliary frequency operation result is the main frequency X plus the auxiliary frequency Y.
1: Main frequency - Auxiliary frequency
The main and auxiliary frequency operation result is the main frequency X minus the auxiliary frequency Y.
2: Max. (main frequency, auxiliary frequency)
The main and auxiliary frequency operation result is the larger value between the main frequency X and the auxiliary frequency Y.
3: Min. (main frequency, auxiliary frequency)
The main and auxiliary frequency operation result is the smaller value between the main frequency X and the auxiliary frequency Y.

F0-08 **Preset frequency**

Address:	0xF008	Effective mode:	Real time
Min.:	0.00	Unit:	Hz
Max.:	F0-10	Data type:	UInt16
Default mode:	50.00	Change mode:	At once

Range:
0.00 to F0-10
Parameter description
When the frequency source is set by digital setting (F0-03 = 0 or 1), this parameter is the target frequency of the AC drive.

F0-09 **Running direction**

Address:	0xF009	Effective mode:	Real time
Min.:	0	Unit:	-
Max.:	1	Data type:	UInt16
Default mode:	0	Change mode:	At once

Range:
0: Default direction
1: Opposite to the default direction
Parameter description
You can change the rotation direction of the motor by modifying this parameter, which equals to exchanging the connection sequence of any two of the U, V, and W cables of the motor.

F0-10 **Maximum frequency**

Address:	0xF00A	Effective mode:	Real time
Min.:	50.00	Unit:	Hz
Max.:	500.00	Data type:	UInt16
Default mode:	50.00	Change mode:	At stop

Range:
50.00 to 500.00
Parameter description
This parameter defines the maximum output frequency of the AC drive.

F0-11 **Source of the frequency upper limit**

Address:	0xF00B	Effective mode:	Real time
Min.:	0	Unit:	-
Max.:	5	Data type:	UInt16
Default mode:	0	Change mode:	At stop

Range:

0: F0-12
1: AI1
2: External operating panel potentiometer
3: Reserved
4: Pulse (DI4 for MD200XXX models and DI/DO for MD200XXX-NC models)
5: Communication

Parameter description

This parameter defines the source of frequency upper limit, as described below.

0: F0-12
The frequency upper limit is set by F0-12.
1: AI1
The frequency upper limit is input by AI1 through voltage signals. The frequency is calculated according to the preset AI curve.
2: External operating panel potentiometer
The frequency upper limit is input by the external operating panel potentiometer AI through current or voltage signals. The frequency is calculated according to the preset AI curve.
4: Pulse (DI4 for MD200XXX models and DI/DO for MD200XXX-NC models)
The frequency upper limit is input by the pulse frequency over the DI4 or DI/DO terminal. The frequency is calculated according to the corresponding relationship curve between the pulse frequency and the maximum frequency.
5: Communication
The frequency upper limit is set through communication.

F0-12 **Frequency upper limit**

Address:	0xF00C	Effective mode:	Real time
Min.:	F0-14	Unit:	Hz
Max.:	F0-10	Data type:	UInt16
Default mode:	50.00	Change mode:	At once

Range:

F0-14 to F0-10

Parameter description

This parameter defines the maximum operating frequency of motors.

F0-14 **Frequency lower limit**

Address:	0xF00E	Effective mode:	Real time
Min.:	0.00	Unit:	Hz
Max.:	F0-12	Data type:	UInt16

Default mode:	0.00	Change mode:	At once

Range:
0.00 to F0-12

Parameter description
This parameter defines the minimum operating frequency of motors. If the frequency is lower than the lower limit, you can determine whether to stop, run at the lower limit, or run at zero speed by F8-14 (Running mode when running frequency is below the frequency lower limit).

F0-15 **Carrier frequency**

Address:	0xF00F	Effective mode:	Real time
Min.:	0.8	Unit:	kHz
Max.:	11.0	Data type:	UInt16
Default mode:	6.0	Change mode:	At once

Range:
0.8 to 11.0

Parameter description
The carrier frequency of the drive, also called switching frequency, determines the number of ON/OFF operations of the power switching device (such as IGBT) of the inverter. It mainly affects the following items:
1. Power loss of the power module IGBT: Higher carrier frequency incurs higher power consumption and higher temperature of the power module, which affects the drive adversely.
2. Waveform of the secondary current output by the drive: When the carrier frequency is high, the current waveform is sinusoidal and smooth. In this way, the harmonic is low, but the interference is relatively large, and the vice versa. When the carrier frequency is too low, the effective torque of the motor decreases, the loss increases, and the temperature rises. On the contrary, when the carrier frequency is too high, the loss of the AC drive increases, the IGBT temperature rises, and the change rate dv/dt of the output voltage increases, which affects the motor insulation performance.
MD200S model: Supports a maximum of 11 kHz.
MD200T model: Supports a maximum of 12 kHz.

F0-16 **Carrier frequency change with temperature**

Address:	0xF010	Effective mode:	Real time
Min.:	0	Unit:	-
Max.:	1	Data type:	UInt16

Default mode:	1	Change mode:	At once

Range:

0: Disable

1: Enable

Parameter description

This parameter is used to select whether the carrier frequency changes with the temperature. After this function is enabled, the drive automatically reduces the carrier frequency upon detecting that the heatsink temperature is high, thereby lowering the temperature of the drive. The AC drive resumes the carrier frequency to the set value when the heatsink temperature becomes normal. This function reduces the risk of overtemperature alarm.

F0-17 Acceleration time 1

Address:	0xF011	Effective mode:	Real time
Min.:	0.0	Unit:	-
Max.:	6500.0	Data type:	UInt16
Default mode:	20.0	Change mode:	At once

Range:

0.0 to 6500.0

Parameter description

This parameter indicates the time required for the output frequency to increase from 0 to the value of F0-25. The acceleration time is usually determined by the rising of frequency setting signal. The frequency reference rise rate must be limited to prevent overcurrent during acceleration of the motor.

Acceleration time setting requirements: The acceleration current must be limited to a value below the overcurrent capacity of the drive, so as to prevent the drive from tripping due to overcurrent stall.

F0-18 Deceleration time 1

Address:	0xF012	Effective mode:	Real time
Min.:	0.0	Unit:	-
Max.:	6500.0	Data type:	UInt16
Default mode:	20.0	Change mode:	At once

Range:

0.0 to 6500.0

Parameter description

This parameter indicates the time required for the output frequency to decrease from the acceleration/deceleration base frequency (F0-25) to 0. The frequency reference drop rate must be limited to prevent overvoltage during deceleration of the motor.
Deceleration time setting requirements: Avoid too large smoothing circuit voltage, so as not to cause the AC drive to trip due to overvoltage stall.

F0-19 **Acceleration/Deceleration time unit**

Address:	0xF013	Effective mode:	Real time
Min.:	0	Unit:	-
Max.:	2	Data type:	UInt16
Default mode:	1	Change mode:	At stop

Range:
0: 1s
1: 0.1s
2: 0.01s

Parameter description
Three acceleration/deceleration time units (values 0 to 2) are available. When this parameter is modified, the decimal places of related acceleration/deceleration time parameters change, and the corresponding acceleration/deceleration time changes accordingly.

F0-23 **Retention of digital setting frequency upon stop**

Address:	0xF017	Effective mode:	Real time
Min.:	0	Unit:	-
Max.:	1	Data type:	UInt16
Default mode:	0	Change mode:	At once

Range:
0: Non-retentive
1: Retentive

Parameter description
This parameter is used to set whether the digital setting frequency will be retained upon stop

0: Non-retentive
F0-08 (preset frequency) is set through the operating panel and the frequency is modified by using the ▲ and ▼ keys on the operating panel or the terminal functioning as the UP/DOWN key. When the AC drive stops, the modification will be cleared.
1: Retentive
F0-08 (preset frequency) is set through the operating panel and the frequency is modified by using the ▲ and ▼ keys on the operating panel or the terminal functioning as the UP/DOWN key. When the AC drive stops, the modification will be retained.

F0-25 Base frequency for acceleration/deceleration time

Address:	0xF019	Effective mode:	Real time
Min.:	0	Unit:	-
Max.:	2	Data type:	UInt16
Default mode:	0	Change mode:	At stop

Range:
0: Maximum frequency (F0-10)
1: Frequency reference
2: 100 Hz
Parameter description
This parameter defines the target frequency during acceleration and the start frequency during deceleration.

F0-26 Base value for frequency adjusted by UP/DOWN key during operation

Address:	0xF01A	Effective mode:	Real time
Min.:	0	Unit:	-
Max.:	1	Data type:	UInt16
Default mode:	0	Change mode:	At stop

Range:
0: Operating frequency
1: Frequency reference
Parameter description
This parameter is used to set the base frequency from which the frequency reference is modified by using the UP/DOWN keys. For example, when F0-26 is set to 0 and the running frequency is 25 Hz, the target frequency will change from 25 Hz by a certain step value when the UP key is pressed. This parameter is valid only when F0-03 or F0-04 is set to 0.

9.2 F1 Motor Parameters

F1-01 **Rated motor power**

Address:	0xF101	Effective mode:	Real time
Min.:	0.1	Unit:	kW
Max.:	3.7	Data type:	UInt16
Default mode:	0.4	Change mode:	At stop

Range:
0.1 to 3.7

Parameter description
This parameter indicates the power of the motor during normal operation. Its value is the product of the rated motor voltage multiplied by the rated motor current. Select a proper motor power on the premise that the motor can meet the requirements of mechanical load. Take the motor heat dissipation, allowable overload capacity, and starting capacity into account.

F1-02 **Rated motor voltage**

Address:	0xF102	Effective mode:	Real time
Min.:	1	Unit:	V
Max.:	1000	Data type:	UInt16
Default mode:	220	Change mode:	At stop

Range:
1 to 1000

Parameter description
This parameter indicates the voltage of the motor during normal operation, which usually refers to the line voltage.

F1-03 **Rated motor current**

Address:	0xF103	Effective mode:	Real time
Min.:	0.01	Unit:	A
Max.:	655.35	Data type:	UInt16
Default mode:	2.30	Change mode:	At stop

Range:
0.01 to 655.35

Parameter description
This parameter indicates the current of the motor during normal operation, which usually refers to the line current.

F1-04 **Rated motor frequency**

Address:	0xF104	Effective mode:	Real time
Min.:	0.01	Unit:	Hz
Max.:	F0-10	Data type:	UInt16
Default mode:	50.00	Change mode:	At stop

Range:

0.01 to F0-10

Parameter description

This parameter indicates the frequency of the power supply connected to the stator winding in the rated operation state of the motor.

F1-05 **Rated motor speed**

Address:	0xF105	Effective mode:	Real time
Min.:	1	Unit:	RPM
Max.:	65535	Data type:	UInt16
Default mode:	1460	Change mode:	At stop

Range:

1 to 65535

Parameter description

The rated motor speed indicates the speed of the rotor under the rated operating conditions.

F1-06 **Stator resistance of asynchronous motor**

Address:	0xF106	Effective mode:	Real time
Min.:	0.001	Unit:	Ω
Max.:	65.535	Data type:	UInt16
Default mode:	4.007	Change mode:	At stop

Range:

0.001 to 65.535

Parameter description

This parameter indicates the DC resistance of stator winding of the asynchronous motor. This parameter can be obtained through motor auto-tuning.

F1-10 **No-load current of asynchronous motor**

Address:	0xF10A	Effective mode:	Real time

Min.:	0.01	Unit:	A
Max.:	F1-03	Data type:	UInt16
Default mode:	2.02	Change mode:	At stop

Range:

0.01 to F1-03

Parameter description

This parameter indicates the current that passes through the three-phase winding of the stator during no-load operation of the asynchronous motor. The parameter can be obtained by parameter auto-tuning of the motor in dynamic state.

F1-37 Parameter auto-tuning selection

Address:	0xF125	Effective mode:	Real time
Min.:	0	Unit:	-
Max.:	1	Data type:	UInt16
Default mode:	0	Change mode:	At stop

Range:

0: No operation

1: Auto-tuning of some asynchronous motor parameters in static state

Parameter description

This parameter is used to select the parameter auto-tuning mode. Accurate motor parameters are required for high-performance motor operation. Motor parameters can be obtained through parameter auto-tuning. During parameter auto-tuning, you can set the corresponding parameter auto-tuning mode according to the motor type. The following parameter auto-tuning modes are available.

0: No auto-tuning

No auto-tuning is performed.

1: Auto-tuning of some asynchronous motor parameters in static state

This mode is applicable to scenarios where the motor cannot be disconnected from loads and auto-tuning in dynamic state is not feasible. In this mode, some motor parameters are auto-tuned, including F1-06 (Stator resistance of asynchronous motor), F1-07 (Rotor resistance of asynchronous motor), and F1-08 (Leakage inductance of asynchronous motor). Other parameters use the default values.

9.3 F3 V/f Control Parameters

F3-00 **V/f curve setting**

Address:	0xF300	Effective mode:	Real time
Min.:	0	Unit:	-
Max.:	11	Data type:	UInt16
Default mode:	0	Change mode:	At stop

Range:

0: V/f line

1: Multi-point V/f curve

10: V/f fully-decoupled mode

11: V/f half-decoupled mode

Parameter description

This parameter is used to set the V/f curve. In V/f mode, different V/f curves can be set according to different application conditions.

0: V/f line

Under the rated frequency, the output voltage of the AC drive changes linearly with the output frequency. This curve is suitable for general mechanical drive applications such as large-inertia fan acceleration, punch presses, centrifuges, and water pumps.

1: Multi-point V/f curve

The range of the frequency point is 0.00 Hz to the rated motor frequency (F1-04). The range of the voltage point is 0.0% to 100.0%, which corresponds to 0 V to the rated motor voltage. Set the multi-point V/f curve based on motor's load characteristic. Observe this formula during setting: F3-03 ≤ F3-05 ≤ F3-07.

2-9: Reserved

10: V/f fully-decoupled mode

The output frequency and output voltage of the AC drive are independent of each other. The output frequency is determined by the frequency source, whereas the output voltage is determined by voltage source in V/f decoupled mode. This mode is applicable to scenarios such as motor torque control.

11: V/f half-decoupled mode

In this mode, the voltage and the frequency are proportional, which can be set through the voltage source. The relationship between the voltage and frequency is also related to the rated voltage and rated frequency of the first group of the motor. The relationship between the output voltage (V) and frequency (f) of the drive is as follows: V/f = 2 x (Voltage source input) x (Rated motor voltage)/(Rated motor frequency). Note: The input value of the voltage source is 0% to 100%.

F3-01 **Torque boost**

Address:	0xF301	Effective mode:	Real time
Min.:	0.0	Unit:	%
Max.:	30.0	Data type:	UInt16
Default mode:	0.0	Change mode:	At once

Range:

0.0 to 30.0

Parameter description

The torque boost function is generally applicable to the AC drive at low frequency. In the V/f control mode, the output torque of the AC drive is proportional to the frequency. Under the condition of low frequency, the torque of the motor is very low when the motor runs at low speed. The output voltage of the AC drive can be increased through this parameter, thereby increasing the current and output torque.

Set this parameter to a proper value to avoid triggering the overload protection function.

F3-02 **Cut-off frequency of torque boost**

Address:	0xF302	Effective mode:	Real time
Min.:	0.00	Unit:	Hz
Max.:	F0-10	Data type:	UInt16
Default mode:	50.00	Change mode:	At stop

Range:

0.00 to F0-10

Parameter description

When the operating frequency reaches the cutoff frequency of torque boost, the torque boost function is disabled.

F3-03 **Frequency 1 on multi-point V/f curve**

Address:	0xF303	Effective mode:	Real time
Min.:	0.00	Unit:	Hz
Max.:	F3-05	Data type:	UInt16
Default mode:	0.00	Change mode:	At stop

Range:

0.00 to F3-05

Parameter description

This parameter indicates frequency 1 set on the multi-point V/f curve.

F3-04 **Voltage 1 on multi-point V/f curve**

Address:	0xF304	Effective mode:	Real time
Min.:	0.0	Unit:	%
Max.:	100.0	Data type:	UInt16
Default mode:	0.0	Change mode:	At stop

Range:

0.0 to 100.0

Parameter description

This parameter indicates voltage 1 set on the multi-point V/f curve.

F3-05 **Frequency 2 on multi-point V/f curve**

Address:	0xF305	Effective mode:	Real time
Min.:	F3-03	Unit:	Hz
Max.:	F3-07	Data type:	UInt16
Default mode:	0.00	Change mode:	At stop

Range:

F3-03 to F3-07

Parameter description

This parameter indicates frequency 2 set on the multi-point V/f curve.

F3-06 **Voltage 2 on multi-point V/f curve**

Address:	0xF306	Effective mode:	Real time
Min.:	0.0	Unit:	%
Max.:	100.0	Data type:	UInt16
Default mode:	0.0	Change mode:	At stop

Range:

0.0 to 100.0

Parameter description

This parameter indicates voltage 2 set on the multi-point V/f curve.

F3-07 **Frequency 3 on multi-point V/f curve**

Address:	0xF307	Effective mode:	Real time
Min.:	F3-05	Unit:	Hz
Max.:	F1-04	Data type:	UInt16
Default mode:	0.00	Change mode:	At stop

Range:
F3-05 to F1-04
Parameter description
This parameter indicates frequency 3 set on the multi-point V/f curve.

F3-08 Voltage 3 on multi-point V/f curve

Address:	0xF308	Effective mode:	Real time
Min.:	0.0	Unit:	%
Max.:	100.0	Data type:	UInt16
Default mode:	0.0	Change mode:	At stop

Range:
0.0 to 100.0
Parameter description
This parameter indicates voltage 3 set on the multi-point V/f curve.

F3-10 Overexcitation gain in V/f mode

Address:	0xF30A	Effective mode:	Real time
Min.:	0	Unit:	-
Max.:	200	Data type:	UInt16
Default mode:	64	Change mode:	At once

Range:
0 to 200
Parameter description
A larger overexcitation gain means better suppression effect. When a braking resistor, braking unit, or energy feedback unit is used, set this parameter to 0. Otherwise, overcurrent may occur during operation.

F3-13 Voltage source in V/f decoupled mode

Address:	0xF30D	Effective mode:	Real time
Min.:	0	Unit:	-
Max.:	8	Data type:	UInt16
Default mode:	0	Change mode:	At once

Range:

0: Digital setting (F3-14)
1: AI1
2: External operating panel potentiometer
3: Reserved
4: Pulse setting (DI4 for MD200XXX models and DI/DO for MD200XXX-NC models)
5: Multi-reference
6: Simple PLC
7: PID
8: Communication setting

Parameter description

This parameter defines the target voltage reference source in the V/f decoupled mode.

0: Digital setting (F3-14)

The voltage in the V/f decoupled mode is set by F3-14 (voltage digital setting in V/f decoupled mode).

1: AI1

The voltage in the V/f decoupled mode is input by the AI1 through current or voltage signals. The frequency is calculated according to the AI curve.

2: External operating panel potentiometer

The voltage in the V/f decoupled mode is input by the external operating panel potentiometer AI through current or voltage signals. The frequency is calculated according to the AI curve.

3: Reserved

4: Pulse setting (DI4 for MD200XXX models and DI/DO for MD200XXX-NC models)

The The voltage in the V/f decoupled mode is set by DI4 or DI/DO pulse reference. The DI4 is applicable to MD200XXX models and DI/DO is applicable to MD200XXX-NC models. The frequency is calculated according to the relationship curve between the pulse frequency and the operating frequency.

5: Multi-reference

In multi-reference mode, different combinations of DI terminal states correspond to different reference values. The four multi-reference terminals can provide 16 states, corresponding to 16 reference values (percentage x maximum frequency) of parameters in group FC.

6: Simple PLC

The voltage in the V/f decoupled mode is set by simple PLC. For details, see the function description of simple PLC.

7: PID
The voltage in the V/f decoupled mode is set through PID. For details, see descriptions of the PID function.
8: Communication setting
The voltage in the V/f decoupled mode is set through communication. The voltage can be input through remote communication. The AC drive communicates with the host controller through Modbus or CANlink. This mode is suitable for remote control or centralized control on multiple equipment.

F3-14 Voltage digital setting in V/f decoupled mode

Address:	0xF30E	Effective mode:	Real time
Min.:	0	Unit:	V
Max.:	F1-02	Data type:	UInt16
Default mode:	0	Change mode:	At once

Range:
0 to F1-02
Parameter description
The parameter value is from 0 V to the rated voltage. In the V/f half-decoupled mode, the output voltage is twice the reference value.

F3-15 Voltage rise time in V/f decoupled mode

Address:	0xF30F	Effective mode:	Real time
Min.:	0.0	Unit:	-
Max.:	1000.0	Data type:	UInt16
Default mode:	0.0	Change mode:	At once

Range:
0.0 to 1000.0
Parameter description
This parameter indicates the time required for the output voltage to rise from 0 to the rated motor voltage. In the V/f half-decoupled mode, this parameter is invalid, and the voltage deceleration time is the same as that set by F0-17.

F3-16 Voltage decline time in V/f decoupled mode

Address:	0xF310	Effective mode:	Real time
Min.:	0.0	Unit:	-
Max.:	1000.0	Data type:	UInt16
Default mode:	0.0	Change mode:	At once

Range:
0.0 to 1000.0
Parameter description
This parameter indicates the time required for the output voltage to decline from the rated motor voltage to 0. In the V/f half-decoupled mode, this parameter is invalid, and the voltage deceleration time is the same as that set by F0-18.

F3-17 **Stop mode in V/f decoupled mode**

Address:	0xF311	Effective mode:	Real time
Min.:	0	Unit:	-
Max.:	1	Data type:	UInt16
Default mode:	0	Change mode:	At stop

Range:
0: The frequency and voltage decline to 0 independently.
1: The frequency declines to 0 after the voltage declines to 0.
Parameter description
This parameter defines the stop mode in the V/f decoupled mode. Stop mode 1 is recommended for applications requiring energy discharge upon load stop.
0: The frequency and voltage decline to 0 independently.
1: The frequency declines to 0 after the voltage declines to 0.

F3-18 **Overcurrent stall action current**

Address:	0xF312	Effective mode:	Real time
Min.:	50	Unit:	%
Max.:	200	Data type:	UInt16
Default mode:	150	Change mode:	At stop

Range:
50 to 200
Parameter description
When the motor current reaches this value, the AC drive activates the overcurrent stall function. The default value is 150%, corresponding to 1.5 times the rated current of the AC drive.

F3-19 **Overcurrent stall suppression**

Address:	0xF313	Effective mode:	Real time
Min.:	0	Unit:	-

Max.:	1	Data type:	UInt16
Default mode:	1	Change mode:	At stop

Range:
0: Disable
1: Enable

Parameter description
This parameter is used to enable the overcurrent stall function in the V/f control mode. The function is disabled by default. After enabled, the function is used to prevent excessively high current in the V/f control mode.

F3-20 Overcurrent stall suppression gain

Address:	0xF314	Effective mode:	Real time
Min.:	0	Unit:	-
Max.:	100	Data type:	UInt16
Default mode:	20	Change mode:	At once

Range:
0 to 100

Parameter description
The overcurrent stall applies when the current exceeds the overcurrent stall action current. The output frequency starts to decrease. After the current falls below the overcurrent stall threshold, the frequency starts to accelerate upwards to the target frequency. The actual acceleration time is automatically prolonged.
The higher the value, the better the overcurrent suppression effect. However, if the value is too large, current oscillation will occur. If pulse-by-pulse current limiting occurs on site after overcurrent suppression is enabled, increase the value properly.

F3-21 Compensation coefficient for overcurrent stall action current at multiplied rated frequency

Address:	0xF315	Effective mode:	Real time
Min.:	0	Unit:	%
Max.:	200	Data type:	UInt16
Default mode:	50	Change mode:	At stop

Range:
0 to 200

Parameter description

This parameter reduces the overcurrent stall action current at high speed. It is invalid when set to 50%. The recommended value for F3-18 in the flux weakening area is 100%.

F3-22 Overvoltage stall action voltage

Address:	0xF316	Effective mode:	Real time
Min.:	330.0	Unit:	V
Max.:	800.0	Data type:	UInt16
Default mode:	390.0	Change mode:	At stop

Range:

330.0 to 800.0

Parameter description

When the bus voltage reaches the value of this parameter, the AC drive activates overvoltage stall protection.

F3-23 Overvoltage stall suppression

Address:	0xF317	Effective mode:	Real time
Min.:	0	Unit:	-
Max.:	1	Data type:	UInt16
Default mode:	1	Change mode:	At stop

Range:

0: Disable

1: Enable

Parameter description

This parameter defines whether to enable overvoltage stall suppression in the V/f mode.

0: Disable

Overvoltage stall suppression is disabled in the V/f mode.

1: Enable

Overvoltage stall suppression is enabled in the V/f mode.

The function of F3-23 is the same as that of F9-04.

When a braking resistor, braking unit, or energy feedback unit is used, set this parameter to 0. Otherwise, the deceleration time may be prolonged.

F3-24 Frequency gain during overvoltage stall suppression

Address:	0xF318	Effective mode:	Real time
Min.:	0	Unit:	-

Max.:	100	Data type:	UInt16
Default mode:	50	Change mode:	At once

Range:
0 to 100

Parameter description
Increasing F3-24 improves the control accuracy on the bus voltage, but leads to fluctuation of the output frequency. If the output frequency fluctuates greatly, reduce F3-24 appropriately. F3-24 has the same function as F9-03 (overvoltage stall gain).

F3-25 Voltage gain during overvoltage stall suppression

Address:	0xF319	Effective mode:	Real time
Min.:	0	Unit:	-
Max.:	100	Data type:	UInt16
Default mode:	30	Change mode:	At once

Range:
0 to 100

Parameter description
This parameter suppresses the bus voltage. Increasing the parameter value can reduce the overshoot of the bus voltage.

F3-26 Frequency rise threshold during overvoltage stall suppression

Address:	0xF31A	Effective mode:	Real time
Min.:	0	Unit:	Hz
Max.:	50	Data type:	UInt16
Default mode:	5	Change mode:	At stop

Range:
0 to 50

Parameter description
The running frequency may increase during overvoltage stall suppression. This parameter is used to limit the increase of the running frequency.

F3-27 Slip compensation time constant

Address:	0xF31B	Effective mode:	Real time
Min.:	0.1	Unit:	-
Max.:	10.0	Data type:	UInt16

Default mode:	0.5	Change mode:	At once

Range:

0.1 to 10.0

Parameter description

This parameter indicates the time constant of the slip compensation frequency. A higher time constant indicates a more stable slip compensation frequency and lower load/noise disturbance, but the response to load changes can be slowed down.

9.4 F4 Input Terminal Parameters

F4-00 **DI1 function selection**

Address:	0xF400	Effective mode:	Real time
Min.:	0	Unit:	-
Max.:	52	Data type:	UInt16
Default mode:	1	Change mode:	At stop

Range:

0: No function
1: Forward run (FWD)
2: Reverse run (REV)
3: Three-wire operation control
4: Forward jog (FJOG)
5: Reverse jog (RJOG)
6: Function as the UP key
7: Function as the DOWN key
8: Coast to stop
9: Fault reset (RESET)
10: Operation pause
11: External fault NO input
12: Multi-reference terminal 1
13: Multi-reference terminal 2
14: Multi-reference terminal 3
15: Multi-reference terminal 4
16: Acceleration/Deceleration time selection terminal 1
17: Reserved
18: Frequency reference switchover
19: Clear information set by UP/DOWN keys on the operating panel or by terminals functioning as the UP/DOWN keys
20: Control command switchover terminal 1
21: Acceleration/Deceleration inhibited
22: PID pause
23: Simple PLC state reset
24: Wobble frequency pause
25: Counter input
26: Counter reset
27: Length counting input
28: Length reset
29: Reserved
30: Pulse frequency input (DI4 for MD200XXX models and DI/DO for MD200XXX-NC models)
31: Reserved
32: Immediate DC braking
33: External fault NC input
34: Frequency modification enable
35: PID action direction reversal
36: External stop terminal 1
37: Control command switchover terminal 2
38: PID integral pause
39: Switch main frequency source to preset frequency
40: Switch auxiliary frequency source to preset frequency

41: Reserved
42: Reserved
43: PID parameter switchover
44: User-defined fault 1
45: User-defined fault 2
46: Reserved
47: Emergency stop
48: External stop terminal 2
49: Deceleration DC braking
50: Clear the current running time
51: Two-wire/Three-wire mode switchover
52: Reverse frequency inhibited

Parameter description

0: No function

The DI has no function.

1: Forward run (FWD)

The AC drive runs in the forward direction. FWD indicates forward running. In two-wire mode 1 (F4-11 = 0), activating terminal function 1 triggers forward running. In two-wire mode 2 (F4-11 = 1), activating terminal function 1 triggers a running command.

2: Reverse run (REV)

The AC drive runs in the reverse direction. REV indicates reverse run. In three-wire mode 1 (F4-11 = 2), activating the terminal sets the AC drive to reversely run. In three-wire mode 2 (F4-11 = 3), activating the terminal sets the forward/reverse run direction.

3: Three-wire operation control

The AC drive operation mode is three-wire control mode. To set the running command through the terminal, set F4-11 (Terminal control mode) to 2 (Three-wire mode 1) or 3 (Three-wire mode 2), and set the terminal function to 3. The three-wire control modes include three-wire mode 1 and three-wire mode 2.

4: Forward jog (FJOG)

The operating mode of the AC drive is forward jog. In the jogging mode, the drive runs at the frequency set by F8-00 (Jogging frequency), which is generally used for maintenance and commissioning of the equipment on site.

5: Reverse jog (RJOG)

The operation mode of the AC drive is reverse jog.

6: Function as the UP key

The terminal is used to increase the frequency. When this terminal is active, it works as if the increment key is pressed and held. When this terminal is inactive, it works as if the increment key is released.

7: Function as the DOWN key
The terminal is used to decrease the frequency When this terminal is active, it works as if the decrement key is pressed and held. When this terminal is inactive, it works as if the decrement key is released.
8: Coast to stop
Once the drive receives a stop command, it immediately stops output and the load then coasts to stop based on the mechanical inertia. The AC drive stops output to shut down. At this time, the power supply of the motor is cut off and the driving system is in the free braking state. Since the stop time is determined by the inertia of the drive system, coast to stop is also called inertia stop.
9: Fault reset (RESET)
Activating the terminal resets the AC drive upon a fault. This function is the same as that of the STOP/RES key on the operating panel. This function allows you to perform a reset upon the fault remotely.
10: Operation pause
The AC drive decelerates to stop with all running parameters retained (such as PLC, wobble frequency, and PID parameters). When the terminal is inactive, the AC drive resumes its running status before stop.
11: External fault NO input
The AC drive reports Err15 upon receiving an external signal.
12-15: Multi-reference terminals 1-4
The AC drive selects the multi-reference as the main frequency. Sixteen speeds or sixteen references can be set through combinations of sixteen states of these four terminals. This function is applicable to scenarios where continuous adjustment of the AC drive running frequency is not required and only several frequency values are required.
16: Acceleration/Deceleration time selection terminals 1
The acceleration time indicates the time required by the AC drive to accelerate from 0 Hz to the base frequency for acceleration/deceleration time (F0-25). The deceleration time indicates the time required by the AC drive to decelerate from the base frequency for acceleration/deceleration time (F0-25) to 0 Hz.
17: Reserved
18: Frequency source switchover
This function is used to switch among different frequency reference input modes. The frequency reference is set by F0-07 (Frequency superposition selection).

19: Clear information set by UP/DOWN keys on the operating panel or by terminals functioning as the UP/DOWN keys
Activating the terminal clears the frequency that is set by the increment or decrement key on the operating panel or the terminal functioning as UP/DOWN keys and resumes the frequency reference to the value specified by F0-08.
20: Control command switchover terminal 1
When the running command is set through the terminal (F0-02=1) and the terminal is active, the control command source is switched from terminal control to operating panel control.
When the running command is set through communication (F0-02=2) and the terminal is active, the control command source is switched from communication control to operating panel control.
21: Acceleration/Deceleration inhibited
The terminal is used to maintain the current running frequency of the AC drive regardless of changes of the external input frequency (unless a stop command is received).
22: PID pause
PID is invalid temporarily. The AC drive maintains the current output frequency without supporting PID adjustment of frequency source.
23: PLC state reset
The terminal is used to restore the AC drive to the initial state of the simple PLC.
24: Wobble frequency pause
In the wobble frequency process, when the terminal is active, the wobble frequency function pauses (the AC drive outputs at the center frequency).
25: Counter input
In the count process, when the terminal is active, a count pulse is input.
26: Counter reset
In the count process, when the terminal is active, the counter status is cleared.
27: Length counting input
In the fixed length process, when the terminal is active, the length count is input.
28: Length reset
In the fixed length process, when the terminal is active, the length is cleared.
29: Reserved
30: Pulse frequency input
When DI5 is used as the pulse input terminal, DI5 must be allocated with this function.

31: Reserved

32: Immediate DC braking

The AC drive directly switches to the DC braking state. DC braking indicates that the drive outputs direct current to the stator winding of the asynchronous motor to form a static magnetic field, enabling the motor to brake with energy consumption. In this state, the rotor cuts the static magnetic field to generate braking torque, which stops the motor quickly.

33: NC input of external fault

The AC drive reports Err15 upon receiving an external signal.

34: Frequency modification enable

When the terminal is active, the frequency can be modified. When the terminal is inactive, the frequency cannot be modified.

35: PID action direction reversal

The PID action direction is reversed to the direction set by FA-03 (PID action direction).

36: External stop terminal 1

When the running command is set through the operating panel (F0-02 = 0), this terminal is used to stop the AC drive, which functions in the same way as the STOP/RES key on the operating panel.

37: Command source switchover terminal 2

The terminal is used for switchover between terminal control and communication control.

If the command source is set to terminal control, activating the terminal switches the AC drive to communication control.

If the command source is set to communication control, activating the terminal switches the AC drive to terminal control.

38: PID integral pause

When the terminal is active, the integral adjustment function of the PID pauses. However, the proportional and derivative adjustment functions are still valid.

39: Switch main frequency source to preset frequency

This function is used to switch the main frequency source to F0-08 (preset frequency).

40: Switch auxiliary frequency source to preset frequency

This function is used to switch the auxiliary frequency source to F0-08 (preset frequency).

41: Reserved
42: Reserved
43: PID parameter switchover
If PID parameters are switched over through DI (FA-18 = 1), the PID parameter values vary with the terminal state. When the terminal is inactive, PID parameters are FA-05 to FA-07 (proportional gain Kp1, integral time Ti1, and differential time Td1). When the terminal is active, PID parameters are FA-15 to FA-17 (proportional gain Kp2, integral time Ti2, and differential time Td2).
44: User-defined fault 1
When the AC drive reports Err27, the AC drive performs operations according to the value of F9-49 (Fault protection action selection).
45: User-defined fault 2
When the AC drive reports Err28, the AC drive performs operations according to the value of F9-49 (Fault protection action selection).
46: Reserved
47: Emergency stop
When the system is in the emergency state, the AC drive decelerates according to F8-55 (Deceleration time for emergency stop). When the deceleration time for emergency stop is 0s in V/f mode, the AC drive decelerates according to the minimum unit time. The input terminal does not need to be in the closed state continuously. Even if it is closed only for a moment, an emergency stop will occur immediately. Different from general deceleration time, the emergency stop input terminal is opened after the deceleration time for emergency stop expires. In this case, if the operation signal is still active, the drive will not restart. To restart the drive, disconnect the operation terminal and input the operation command again.
48: External stop terminal 2
The terminal is used to make the AC drive decelerate to stop in any control mode (operating panel, terminal, or communication control). In this mode, the deceleration time is fixed to deceleration time 4 (F8-08).
49: Deceleration DC braking
The AC drive decelerates to F6-11 (Start frequency of DC braking for stop) and then enters the DC braking state.
50: Clear the current running time
The terminal is used to clear the current running time of the AC drive. If the current running time is less than the value (greater than 0) of F8-53 (Present running time reach settings), the current running timing is cleared when the terminal is active. If the current running time is greater than the value (greater than 0) of F8-53, the current running time is not cleared when the terminal is active.
51: Two-wire/Three-wire mode switchover
The terminal is used to switch between the two-wire control mode and the three-wire control mode.

When F4-11 is set to 0 (two-wire mode 1) and the terminal is active, the AC drive switches to three-wire mode 1. When the terminal is inactive, two-wire mode 1 is used.
When F4-11 is set to 1 (two-wire mode 2) and the terminal is active, the AC drive switches to three-wire mode 2. When the terminal is inactive, two-wire mode 2 is used.
When F4-11 is set to 2 (Three-wire mode 1) and the terminal is active, the AC drive switches to two-wire mode 1. When the terminal is inactive, three-wire control mode 1 is used.
When F4-11 is set to 3 (Three-wire mode 2) and the terminal is active, the AC drive switches to two-wire mode 2. When the terminal is inactive, three-wire control mode 2 is used.
52: Reverse frequency inhibited
When the terminal is active, even if the reverse frequency is set, the actual frequency of the AC drive is fixed to 0.
It functions the same as F8-13 (Reverse running prohibition).

F4-01 **DI2 function selection**

Address:	0xF401	Effective mode:	Real time
Min.:	0	Unit:	-
Max.:	52	Data type:	UInt16
Default mode:	4	Change mode:	At stop

Range:
Same as F4-00
Parameter description
Same as F4-00

F4-02 **DI3 function selection**

Address:	0xF402	Effective mode:	Real time
Min.:	0	Unit:	-
Max.:	52	Data type:	UInt16
Default mode:	9	Change mode:	At stop

Range:
Same as F4-00
Parameter description
Same as F4-00

F4-03 **DI4 function selection**

Address:	0xF403	Effective mode:	Real time

Min.:	0	Unit:	-
Max.:	52	Data type:	UInt16
Default mode:	12	Change mode:	At stop

Range:

Same as F4-00

Parameter description

Same as F4-00

F4-10 DI filter time

Address:	0xF40A	Effective mode:	Real time
Min.:	0.000	Unit:	-
Max.:	1.000	Data type:	UInt16
Default mode:	0.010	Change mode:	At once

Range:

0.000 to 1.000

Parameter description

This parameter defines the delay time for the DI status change. This parameter is active only when F9-59 (Power dip ride-through function) is set to 2 (Decelerate to stop).

F4-11 Terminal control mode

Address:	0xF40B	Effective mode:	Real time
Min.:	0	Unit:	-
Max.:	3	Data type:	UInt16
Default mode:	0	Change mode:	At stop

Range:

0: Two-wire mode 1

1: Two-wire mode 2

2: Three-wire mode 1

3: Three-wire mode 2

Parameter description

This parameter is used to set the mode in which the drive is controlled by external terminals.

0: Two-wire mode 1

Two DIs are connected. One is used to start/stop the AC drive in the forward run mode, and the other is used to start/stop the AC drive in the reverse run mode.

1: Two-wire mode 2
Two DIs are connected. One is used to start/stop the AC drive, and the other is used to control the running direction.
2: Three-wire mode 1
Three DIs are connected. One is used to start/stop the AC drive, and the other two are used to control the running direction.
3: Three-wire mode 2
Three DIs are connected. One is used to start the AC drive, one is used to stop the AC drive, and the other is used to control the running direction.

F4-12 Step value of terminal functioning as UP/DOWN keys

Address:	0xF40C	Effective mode:	Real time
Min.:	0.001	Unit:	Hz/s
Max.:	65.535	Data type:	UInt16
Default mode:	1.000	Change mode:	At once

Range:
0.001 to 65.535
Parameter description
This parameter defines the step value when the frequency is adjusted by UP/DOWN keys.
To make the DIx terminal function as the UP or DOWN key to adjust the frequency, set the corresponding parameter (F4-00 to F4-09) to 6 (Function as the UP key) or 7 (Function as the DOWN key).

F4-13 Minimum input of AI curve 1

Address:	0xF40D	Effective mode:	Real time
Min.:	0.00	Unit:	V
Max.:	F4-15	Data type:	UInt16
Default mode:	0.00	Change mode:	At once

Range:
0.00 to F4-15

Parameter description

When the main frequency is set by AI, each AI terminal supports five types of AI curves. The AI curve is used to set the mapping between the analog input voltage (or current) and the percentage corresponding to the maximum frequency (F0-10). The x axis of AI curve represents the analog input voltage or current, and the y axis represents the set value corresponding to the analog input, which is the percentage to the maximum frequency (F0-10). Five AI curves are provided. Curves 1 to 3 are two-point curves, and their relevant parameters are F4-13 to F4-27. Curves 4 and 5 are four-point curves, and their relevant parameters are A6-00 to A6-15. The two points on curves 1 to 3 are the minimum input point and the maximum input point. F4-13 corresponds to the x axis of the AI curve 1 minimum input, that is, the minimum analog input voltage or current.

F4-14 **Percentage corresponding to the minimum input of AI curve 1**

Address:	0xF40E	Effective mode:	Real time
Min.:	-100.0	Unit:	%
Max.:	100.0	Data type:	Int16
Default mode:	0.0	Change mode:	At once

Range:

-100.0 to 100.0

Parameter description

F4-14 corresponds to the y axis of the minimum input point on AI curve 1, namely the set value corresponding to the minimum analog input.

F4-15 **Maximum input of AI curve 1**

Address:	0xF40F	Effective mode:	Real time
Min.:	F4-13	Unit:	V
Max.:	10.00	Data type:	UInt16
Default mode:	10.00	Change mode:	At once

Range:

F4-13 to 10.00

Parameter description

F4-15 corresponds to the x axis of the maximum input point on AI curve 1, namely the maximum analog input voltage or current.

F4-16 **Percentage corresponding to the maximum input of AI curve 1**

Address:	0xF410	Effective mode:	Real time

Min.:	-100.0	Unit:	%
Max.:	100.0	Data type:	Int16
Default mode:	100.0	Change mode:	At once

Range:

-100.0 to 100.0

Parameter description

This parameter corresponds to the y axis of the maximum input point on AI curve 1, that is, the set value corresponding to the maximum analog input. For example, when the AI curve corresponds to the frequency, the set value is the percentage to the maximum frequency.

F4-17 AI1 fitter time

Address:	0xF411	Effective mode:	Real time
Min.:	0.00	Unit:	-
Max.:	10.00	Data type:	UInt16
Default mode:	0.10	Change mode:	At once

Range:

0.00 to 10.00

Parameter description

This parameter indicates the software filter time of AI1.

The longer the AI filter time, the stronger the anti-interference capability and the slower the response to analog detection. The shorter the AI filter time, the weaker the anti-interference capability and the faster the response to analog detection.

When analog signals on the site are susceptible to interference, increase the AI filter time to enhance the stability of analog signals.

F4-18 Minimum input of AI curve 2

Address:	0xF412	Effective mode:	Real time
Min.:	0.00	Unit:	V
Max.:	10.00	Data type:	UInt16
Default mode:	0.00	Change mode:	At once

Range:

0.00 to 10.00

Parameter description

F4-18 corresponds to x axis of the minimum input of AI curve 2, namely the minimum analog input voltage or current. For the current-type AI curve (jumper J9 connected to the current end), 1 mA current corresponds to 0.5 V voltage. That is, 4 mA corresponds to 2 V.

F4-19 **Percentage corresponding to the minimum input of AI curve 2**

Address:	0xF413	Effective mode:	Real time
Min.:	-100.0	Unit:	%
Max.:	100.0	Data type:	Int16
Default mode:	0.0	Change mode:	At once

Range:

-100.0 to 100.0

Parameter description

F4-19 corresponds to y axis of the minimum input point on AI curve 2, namely the set value corresponding to the minimum analog input.

F4-20 **Maximum input of AI curve 2**

Address:	0xF414	Effective mode:	Real time
Min.:	0.00	Unit:	V
Max.:	10.00	Data type:	UInt16
Default mode:	10.00	Change mode:	At once

Range:

0.00 to 10.00

Parameter description

F4-20 corresponds to the x axis of the AI curve 2 maximum input, that is, the maximum analog input voltage or current. For the current-type AI curve (jumper J9 connected to the current end), 1 mA current corresponds to 0.5 V voltage. That is, 20 mA corresponds to 10 V.

F4-21 **Percentage corresponding to the maximum input of AI curve 2**

Address:	0xF415	Effective mode:	Real time
Min.:	-100.0	Unit:	%
Max.:	100.0	Data type:	Int16
Default mode:	100.0	Change mode:	At once

Range:

-100.0 to 100.0

Parameter description

F4-21 corresponds to the y axis of the maximum input point on AI curve 2, that is, the set value corresponding to the maximum analog input. For example, when the AI curve corresponds to the frequency, the set value is the percentage to the maximum frequency.

F4-22 **AI2 fitter time**

Address:	0xF416	Effective mode:	Real time
Min.:	0.00	Unit:	-
Max.:	10.00	Data type:	UInt16
Default mode:	0.10	Change mode:	At once

Range:

0.00 to 10.00

Parameter description

This parameter indicates the software filter time of AI2.

The longer the AI filter time, the stronger the anti-interference capability and the slower the response to analog detection. The shorter the AI filter time, the weaker the anti-interference capability and the faster the response to analog detection.

When analog signals on the site are susceptible to interference, increase the AI filter time to enhance the stability of analog signals.

F4-28 **Pulse minimum input**

Address:	0xF41C	Effective mode:	Real time
Min.:	0.00	Unit:	kHz
Max.:	F4-30	Data type:	UInt16
Default mode:	0.00	Change mode:	At once

Range:

0.00 to F4-30

Parameter description

When the terminal high-speed pulse is used to set the main frequency, the relationship curve between the pulse frequency and the frequency reference must be set. The frequency reference is a percentage corresponding to the maximum frequency (F0-10). The x axis of the curve represents the pulse frequency and the y axis represents the percentage corresponding to the maximum frequency (F0-10). The curve is a two-point straight line, which includes the minimum and maximum pulse input points.

F4-28 corresponds to the x axis of the minimum pulse input, that is, the minimum input frequency of the pulse.

F4-29 **Percentage corresponding to pulse minimum input**

Address:	0xF41D	Effective mode:	Real time
Min.:	-100.0	Unit:	%
Max.:	100.0	Data type:	Int16

Default mode:	0.0	Change mode:	At once

Range:

-100.0 to 100.0

Parameter description

This parameter corresponds to the y axis of the minimum pulse input, that is, the set value corresponding to the minimum pulse input.

F4-30 Pulse maximum input

Address:	0xF41E	Effective mode:	Real time
Min.:	F4-28	Unit:	kHz
Max.:	20.00	Data type:	UInt16
Default mode:	20.00	Change mode:	At once

Range:

F4-28 to 20.00

Parameter description

This parameter corresponds to the x axis of the maximum pulse input, that is, the maximum input frequency of the pulse.

F4-31 Percentage corresponding to pulse maximum input

Address:	0xF41F	Effective mode:	Real time
Min.:	-100.0	Unit:	%
Max.:	100.0	Data type:	Int16
Default mode:	100.0	Change mode:	At once

Range:

-100.0 to 100.0

Parameter description

F4-31 corresponds to the y axis of the pulse maximum input point, that is, the set value corresponding to the pulse maximum input. For example, when the pulse corresponds to the frequency, the set value is the percentage to the maximum frequency.

F4-32 Pulse filter time

Address:	0xF420	Effective mode:	Real time
Min.:	0.00	Unit:	-
Max.:	10.00	Data type:	UInt16
Default mode:	0.10	Change mode:	At once

Range:
0.00 to 10.00
Parameter description
This parameter defines the frequency filter time.

F4-33 **AI curve selection**

Address:	0xF421	Effective mode:	Real time
Min.:	0x0011	Unit:	-
Max.:	0x0055	Data type:	UInt16
Default mode:	0x0021	Change mode:	At once

Range:
Ones: AI1 curve selection
1: Curve 1 (2 points, F4-13 to F4-16)
2: Curve 2 (2 points, F4-18 to F4-21)
3: Curve 3 (2 points, F4-23 to F4-26)
4: Curve 4 (4 points, A6-00 to A6-07)
5: Curve 5 (4 points, A6-08 to A6-15)
Tens: Curve selection for external operating panel potentiometer
1: Curve 1 (2 points, F4-13 to F4-16)
2: Curve 2 (2 points, F4-18 to F4-21)
3: Curve 3 (2 points, F4-23 to F4-26)
4: Curve 4 (4 points, A6-00 to A6-07)
5: Curve 5 (4 points, A6-08 to A6-15)
Parameter description
The ones and tens places of this parameter are used to set the curve for AI1 and the external operating panel potentiometer. Curve 1 to curve 5 can be selected. When the main frequency is set by AI, each AI terminal supports five types of AI curves.

F4-34 **AI lower limit selection (applicable only to single-phase MD200SXX/ MD200SXX-NC models)**

Address:	0xF422	Effective mode:	Real time
Min.:	0x0	Unit:	-
Max.:	0x0011	Data type:	UInt16
Default mode:	0x0	Change mode:	At once

Range:

Ones: Selection when AI1 value lower than minimum input value
0: Corresponding to the minimum input setting
1: 0.0% Tens: Selection when external operating panel potentiometer value lower than minimum input value
0: Corresponding to the minimum input setting
1: 0.0%

Parameter description

The ones and tens places of this parameter are used to set the setting method when the AI input value is lower than the minimum input value. When the analog input voltage is less than the minimum input set by F4-13, the corresponding setting value is calculated according to the minimum input or 0.0% defined by this parameter.

F4-35 DI1 delay (applicable only to single-phase MD200SXX models)

Address:	0xF423	Effective mode:	Real time
Min.:	0.0	Unit:	-
Max.:	3600.0	Data type:	UInt16
Default mode:	0.0	Change mode:	At once

Range:

0.0 to 3600.0

Parameter description

This parameter defines the delay of the DI state change. The delay setting function is available only for DI1, DI2, and DI3.

F4-36 DI2 delay (applicable only to single-phase MD200SXX models)

Address:	0xF424	Effective mode:	Real time
Min.:	0.0	Unit:	-
Max.:	3600.0	Data type:	UInt16
Default mode:	0.0	Change mode:	At once

Range:

0.0 to 3600.0

Parameter description

This parameter defines the delay of the DI state change. The delay setting function is available only for DI1, DI2, and DI3.

F4-37 DI3 delay (applicable only to single-phase MD200SXX models)

Address:	0xF425	Effective mode:	Real time

Min.:	0.0	Unit:	-
Max.:	3600.0	Data type:	UInt16
Default mode:	0.0	Change mode:	At once

Range:

0.0 to 3600.0

Parameter description

This parameter defines the delay of the DI state change. The delay setting function is available only for DI1, DI2, and DI3.

F4-38 DI active mode selection 1

Address:	0xF426	Effective mode:	Real time
Min.:	0	Unit:	-
Max.:	1111	Data type:	UInt16
Default mode:	0	Change mode:	At stop

Range:

Ones: DI1

0: Active high

1: Active low

Tens: DI2

0: Active high

1: Active low

Hundreds: DI3

0: Active high

1: Active low

Thousands: DI4

0: Active high

1: Active low

Parameter description

The ones, tens, hundreds, and thousands places of this parameter are used to set the active mode of DI1 to DI4 and DI/DO.

0: Active high

The DI (DI1 to DI4, DI/DO) is active when connected to the COM terminal and inactive when disconnected from the COM terminal.

1: Active low

The DI (DI1 to DI4, DI/DO) is inactive when connected to the COM terminal and active when disconnected from the COM terminal.

F4-41 DI/DO and DI4 type

Address:	0xF429	Effective mode:	Real time

Min.:	0	Unit:	-
Max.:	1	Data type:	UInt16
Default mode:	0	Change mode:	At stop

Range:

Ones: DI/DO and DI4 type

0: DI/Pulse

1: DO

Parameter description

This parameter is used to configure the DI4 type of the MD200 model or the DI/DO type of the MD200-NC model.

9.5 F5 Output Terminal Parameters

F5-02 **Output function selection of control board relay**

Address:	0xF502	Effective mode:	Real time
Min.:	0	Unit:	-
Max.:	41	Data type:	UInt16
Default mode:	2	Change mode:	At once

Range:

0: No output
1: Drive in operation
2: Fault output (coast to stop)
3: Frequency level detection 1
4: Frequency reached
5: Operation at zero speed (no output at stop)
6: Motor overload alarm
7: Drive overload alarm
8: Set count value reached
9: Designated count value reached
10: Length reached
11: Simple PLC cycle completed
12: Cumulative operating time reached
13: Frequency limited
14: Reserved
15: Ready to run
16: Reserved
17: Frequency upper limit reached
18: Frequency lower limit reached (no output at stop)19: Undervoltage
20: Communication setting
21: Reserved
22: Reserved
23: Operation at zero speed 2 (output at stop)
24: Cumulative power-on time reached
25: Frequency level detection 2
26: Frequency 1 reached
27: Frequency 2 reached
28: Current 1 reached
29: Current 2 reached
30: Timing reached
31: AI1 input limit exceeded
32: Drive output load loss
33: Reverse running
34: Zero current state
35: Module temperature reached
36: Output current limit exceeded
37: Frequency lower limit reached (output at stop)
38: Alarm (all faults)
39: Motor overheat
40: Present operating time reached
41: Fault output 2

Parameter description

0: No output
The terminal has no function.
1: AC drive running
When the AC drive is running with output frequency (can be 0), the terminal outputs an active signal.
2: Fault output (coast to stop)
When the AC drive stops upon a fault, the terminal outputs an active signal.
3: Frequency level detection 1
When the running frequency is higher than the detection frequency, the terminal outputs an active signal. When the running frequency is lower than the result of the detection frequency minus the FDT hysteresis value (F8-19 x F8-20), the terminal stops outputting an active signal.
4: Frequency reached
When the running frequency of the AC drive is within a certain range (target frequency ± F8-21 x maximum frequency), the terminal outputs an active signal.
5: Operation at zero speed (no output at stop)
When the output frequency is 0 during AC drive running, the terminal outputs an active signal. The terminal outputs an inactive signal when the AC drive is stopped.
6: Motor overload alarm
The AC drive determines whether the motor load exceeds the overload warning threshold according to the overload warning coefficient (F9-02) before performing the protection action. The terminal outputs an active signal when the overload warning threshold is exceeded.
7: Drive overload alarm
The terminal outputs an active signal 10s before the AC drive performs overload protection.
8: Set count value reached
The terminal outputs an active signal when the count value reaches the value of Fb-08.
9: Designated count value reached
The terminal outputs an active signal when the count value reaches the value of Fb-09.
10: Length reached
The terminal outputs an active signal when the detected actual length exceeds the value of Fb-05.
11: Simple PLC cycle completed
The terminal outputs a pulse signal with the width of 250 ms when the simple PLC completes one cycle.
12: Cumulative operating time reached
The terminal outputs an active signal when the cumulative running time of the AC drive exceeds the value of F8-17 (cumulative running time threshold).

13: Frequency limited
The terminal outputs an active signal when the output frequency of the AC drive reaches the frequency limit in speed control mode.
14: Reserved
15: Ready to run
The terminal outputs an active signal when the AC drive is ready for running without any fault after power-on.
16: Reserved
17: Frequency upper limit reached
The terminal outputs an active signal when the running frequency reaches the frequency upper limit (F0-12).
18: Frequency lower limit reached (no output at stop)
If F8-14 (running mode when frequency reference lower than lower limit) is set to 1 (stop), the terminal outputs an inactive signal no matter whether the running frequency reaches the frequency lower limit.
When F8-14 is set to 0 (run at the lower limit frequency) or 2 (run at zero speed) and the running frequency reaches the lower limit, the terminal outputs an active signal.
19: Undervoltage
The terminal outputs an active signal when undervoltage occurs on the AC drive.
20: Communication setting
Whether the terminal is active or inactive is determined by communication address 0x2001.
21 to 22: Reserved
23: Operation at zero speed 2 (output at stop)
When the output frequency is 0 during operation of the drive, the terminal outputs an active signal. The signal is still active when the AC drive stops.
24: Cumulative power-on time reached
The terminal outputs an active signal when the cumulative power-on time of the AC drive (F7-13) exceeds the value of F8-16 (cumulative power-on time threshold).
25: Frequency level detection 2
When the running frequency is higher than the detection frequency, the terminal outputs an active signal. When the running frequency is lower than the result of the detection frequency minus the frequency detection hysteresis value (F8-28 x F8-29), the terminal stops outputting an active signal.
26: Frequency 1 reached
When the running frequency of the AC drive is within the detection range set by F8-30, the terminal outputs an active signal. Frequency detection range: F8-30 - F8-31 x F0-10 (Maximum frequency) to F8-30 + F8-31 x F0-10

27: Frequency 2 reached
When the running frequency of the AC drive is within the detection range set by F8-32, the terminal outputs an active signal. Frequency detection range: F8-32 - F8-33 x F0-10 (Maximum frequency) to F8-32 + F8-33 x F0-10
28: Current 1 reached
When the output current of the AC drive is within the detection range set by F8-38, the terminal outputs an active signal. Current detection range = F8-38 - F8-39 x F1-03 (Rated motor current) to F8-38 + F8-39 x F1 03.
29: Current 2 reached
When the output current of the AC drive is within the detection range set by F8-40, the terminal outputs an active signal. Current detection range = F8-40 - F8-41 x F1-03 (Rated motor current) to F8-40 + F8-41 x F1 03.
30: Timing reached
With the timing function (F8-42) enabled, when the current running time of the AC drive reaches the set time, the terminal outputs an active signal. The timing duration is set by F8-43 and F8-44.
31: AI1 input limit exceeded
The terminal outputs an active signal when AI1 input is higher than the value of F8-46 (AI1 input voltage upper limit) or lower than the value of F8-45 (AI1 input voltage lower limit).
32: Drive output load loss
The terminal outputs an active signal when the drive is in the load loss state.
33: Reverse running
The terminal outputs an active signal when the AC drive runs in the reverse direction.
34: Zero current state
When the output current of the AC drive is within the zero-current range for a period exceeding the value of F8-35 (zero current detection delay), the terminal outputs an active signal. Zero current detection range = 0 to F8-34 x F1-03
35: Module temperature reached
The terminal outputs an active signal when the inverter heatsink temperature (F7-07) reaches the value of F8-47 (module temperature reach).
36: Output current limit exceeded
When the output current of the AC drive is greater than F8-36 (output overcurrent threshold) for a period exceeding the value of F8-37 (output overcurrent detection delay), the terminal outputs an active signal.
37: Frequency lower limit reached (output at stop)
The terminal outputs an active signal when the running frequency reaches the frequency lower limit (F0-14). The terminal still outputs the active signal when the drive is in the stop state.

38: Alarm (all faults)
If a fault occurs on the AC drive and the AC drive continues to run upon fault, the terminal outputs an active signal. For details about the fault protection action, see F9-47 to F9-50.
39: Motor overheat
The terminal outputs an active signal when the motor temperature reaches the value of F9-58 (Motor overtemperature warning threshold). You can check the motor temperature using U0-34.
40: Present operating time reached
The terminal outputs an active signal when the present running time of the AC drive is longer than the value of F8-53 (current running time threshold).
41: Fault output 2
When a fault occurs on the AC drive (excluding undervoltage), the terminal outputs an active signal.

F5-04 **DI/DO output function selection**

Address:	0xF504	Effective mode:	Real time
Min.:	0	Unit:	-
Max.:	41	Data type:	UInt16
Default mode:	0	Change mode:	At once

Range:

0: No output
1: Drive in operation
2: Fault output (coast to stop)
3: Frequency level detection 1
4: Frequency reached
5: Operation at zero speed (no output at stop)
6: Motor overload alarm
7: Drive overload alarm
8: Set count value reached
9: Designated count value reached
10: Length reached
11: Simple PLC cycle completed
12: Cumulative operating time reached
13: Frequency limited
14: Reserved
15: Ready to run
16: Reserved
17: Frequency upper limit reached
18: Frequency lower limit reached (no output at stop)
19: Undervoltage
20: Communication setting
21: Reserved
22: Reserved
23: Operation at zero speed 2 (output at stop)
24: Cumulative power-on time reached
25: Frequency level detection 2
26: Frequency 1 reached
27: Frequency 2 reached
28: Current 1 reached
29: Current 2 reached
30: Timing reached
31: AI1 input limit exceeded
32: Drive output load loss
33: Reverse running
34: Zero current state
35: Module temperature reached
36: Output current limit exceeded
37: Frequency lower limit reached (output at stop)
38: Alarm (all faults)
39: Motor overheat
40: Present operating time reached
41: Fault output 2

Parameter description

0: No output

The terminal has no function.

1: AC drive running

When the AC drive is running with output frequency (can be 0), the terminal outputs an active signal.

2: Fault output (coast to stop)

When the AC drive stops upon a fault, the terminal outputs an active signal.

3: Frequency level detection 1

When the running frequency is higher than the detection frequency, the terminal outputs an active signal. When the running frequency is lower than the result of the detection frequency minus the FDT hysteresis value (F8-19 x F8-20), the terminal stops outputting an active signal.

4: Frequency reached

When the running frequency of the AC drive is within a certain range (target frequency ± F8-21 x maximum frequency), the terminal outputs an active signal.

5: Operation at zero speed (no output at stop)

When the output frequency is 0 during AC drive running, the terminal outputs an active signal. The terminal outputs an inactive signal when the AC drive is stopped.

6: Motor overload alarm

The AC drive determines whether the motor load exceeds the overload warning threshold according to the overload warning coefficient (F9-02) before performing the protection action. The terminal outputs an active signal when the overload warning threshold is exceeded.

7: Drive overload alarm

The terminal outputs an active signal 10s before the AC drive performs overload protection.

8: Set count value reached

The terminal outputs an active signal when the count value reaches the value of Fb-08.

9: Designated count value reached

The terminal outputs an active signal when the count value reaches the value of Fb-09.

10: Length reached

The terminal outputs an active signal when the detected actual length exceeds the value of Fb-05.

11: Simple PLC cycle completed

The terminal outputs a pulse signal with the width of 250 ms when the simple PLC completes one cycle.

12: Cumulative operating time reached
The terminal outputs an active signal when the cumulative running time of the AC drive exceeds the value of F8-17 (cumulative running time threshold).
13: Frequency limited
The terminal outputs an active signal when the output frequency of the AC drive reaches the frequency limit in speed control mode.
14: Reserved
15: Ready to run
The terminal outputs an active signal when the AC drive is ready for running without any fault after power-on.
16: Reserved
17: Frequency upper limit reached
The terminal outputs an active signal when the running frequency reaches the frequency upper limit (F0-12).
18: Frequency lower limit reached (no output at stop)
If F8-14 (running mode when frequency reference lower than lower limit) is set to 1 (stop), the terminal outputs an inactive signal no matter whether the running frequency reaches the frequency lower limit.
When F8-14 is set to 0 (run at the lower limit frequency) or 2 (run at zero speed) and the running frequency reaches the lower limit, the terminal outputs an active signal.
19: Undervoltage
The terminal outputs an active signal when undervoltage occurs on the AC drive.
20: Communication setting
Whether the terminal is active or inactive is determined by communication address 0x2001.
21 to 22: Reserved
23: Operation at zero speed 2 (output at stop)
When the output frequency is 0 during operation of the drive, the terminal outputs an active signal. The signal is still active when the AC drive stops.
24: Cumulative power-on time reached
The terminal outputs an active signal when the cumulative power-on time of the AC drive (F7-13) exceeds the value of F8-16 (cumulative power-on time threshold).
25: Frequency level detection 2
When the running frequency is higher than the detection frequency, the terminal outputs an active signal. When the running frequency is lower than the result of the detection frequency minus the frequency detection hysteresis value (F8-28 x F8-29), the terminal stops outputting an active signal.

26: Frequency 1 reached
When the running frequency of the AC drive is within the detection range set by F8-30, the terminal outputs an active signal. Frequency detection range: F8-30 - F8-31 x F0-10 (Maximum frequency) to F8-30 + F8-31 x F0-10
27: Frequency 2 reached
When the running frequency of the AC drive is within the detection range set by F8-32, the terminal outputs an active signal. Frequency detection range: F8-32 - F8-33 x F0-10 (Maximum frequency) to F8-32 + F8-33 x F0-10
28: Current 1 reached
When the output current of the AC drive is within the detection range set by F8-38, the terminal outputs an active signal. Current detection range = F8-38 - F8-39 x F1-03 (Rated motor current) to F8-38 + F8-39 x F1 03.
29: Current 2 reached
When the output current of the AC drive is within the detection range set by F8-40, the terminal outputs an active signal. Current detection range = F8-40 - F8-41 x F1-03 (Rated motor current) to F8-40 + F8-41 x F1 03.
30: Timing reached
With the timing function (F8-42) enabled, when the current running time of the AC drive reaches the set time, the terminal outputs an active signal. The timing duration is set by F8-43 and F8-44.
31: AI1 input limit exceeded
The terminal outputs an active signal when AI1 input is higher than the value of F8-46 (AI1 input voltage upper limit) or lower than the value of F8-45 (AI1 input voltage lower limit).
32: Drive output load loss
The terminal outputs an active signal when the drive is in the load loss state.
33: Reverse running
The terminal outputs an active signal when the AC drive runs in the reverse direction.
34: Zero current state
When the output current of the AC drive is within the zero-current range for a period exceeding the value of F8-35 (zero current detection delay), the terminal outputs an active signal. Zero current detection range = 0 to F8-34 x F1-03
35: Module temperature reached
The terminal outputs an active signal when the inverter heatsink temperature (F7-07) reaches the value of F8-47 (module temperature reach).
36: Output current limit exceeded
When the output current of the AC drive is greater than F8-36 (output overcurrent threshold) for a period exceeding the value of F8-37 (output overcurrent detection delay), the terminal outputs an active signal.

37: Frequency lower limit reached (output at stop)
The terminal outputs an active signal when the running frequency reaches the frequency lower limit (F0-14). The terminal still outputs the active signal when the drive is in the stop state.
38: Alarm (all faults)
If a fault occurs on the AC drive and the AC drive continues to run upon fault, the terminal outputs an active signal. For details about the fault protection action, see F9-47 to F9-50.
39: Motor overheat
The terminal outputs an active signal when the motor temperature reaches the value of F9-58 (Motor overtemperature warning threshold). You can check the motor temperature using U0-34.
40: Present operating time reached
The terminal outputs an active signal when the present running time of the AC drive is longer than the value of F8-53 (current running time threshold).
41: Fault output 2
When a fault occurs on the AC drive (excluding undervoltage), the terminal outputs an active signal.

F5-07 **AO1 function selection**

Address:	0xF507	Effective mode:	Real time
Min.:	0	Unit:	-
Max.:	16	Data type:	UInt16
Default mode:	0	Change mode:	At once

Range:

0: Running frequency
1: Frequency reference
2: Output current
3: Output torque (absolute value)
4: Output power
5: Output voltage
6: Pulse input
7: AI1
8: Reserved
9: Reserved
10: Reserved
11: Reserved
12: Communication setting
13: Motor speed
14: Output current
15: Bus voltage
16: Reserved

Description

0: Operating frequency (100.0% corresponds to the maximum frequency F0-10.)
1: Frequency reference (100.0% corresponds to the maximum frequency F0-10.)
2: Output current (100.0% corresponds to 2 times the rated motor current.)
3: Output torque (100.0% corresponds to 2 times the rated motor torque. Absolute value; proportion to rated motor torque)
4: Output power (100.0% corresponds to 2 times the rated motor power.)
5: Output voltage (100.0% corresponds to 1.2 times the rated motor voltage.)
6: Pulse input (100.0% corresponds to 100.0 kHz.)
7: AI1 (0% to 100.0% correspond to -10 V to 10 V.)
8: Reserved
9: Reserved
10: Reserved
11: Reserved
12: Communication setting (100.0% corresponds to the AO communication setting.)
13: Motor speed (100.0% corresponds to the maximum frequency F0-10.)
14: Output current (100.0% corresponds to 1000.0 A.)
15: Bus voltage (100.0% corresponds to 1000.0 V.)
16: Reserved

F5-10 **AO1 zero offset coefficient**

Address:	0xF50A	Effective mode:	Real time
Min.:	-100.0	Unit:	%
Max.:	100.0	Data type:	Int16
Default mode:	0.0	Change mode:	At once

Range:

-100.0 to 100.0

Parameter description

On the AO curve, if b indicates zero offset, k indicates gain, and X indicates standard output, the actual output Y is kX plus b (Y = kX + b). The zero offset coefficient 100% of AO1 corresponds to 10 V (or 20 mA). The standard output refers to the value of the analog output at 0 V to 10 V (or 0 mA to 20 mA) output without zero offset or gain adjustment.

Zero offset = Zero offset coefficient x 10 V (or 20 mA)

Assume that the AO terminal outputs the running frequency. The rectified output needs to be 4 mA/2 V (Y1) when the frequency is 0 Hz (X1) and 20 mA/10 V (Y2) when the frequency is 50 Hz (X2). Use the J7 jumper to select voltage output or current output. The zero offset coefficient is calculated as follows: [(X1 x Y2 - X2 x Y1)/((X1-X2) x Ymax)] x 100%. Ymax is the current (voltage) and the value is 20 mA (10 V). If the result is 20%, the zero offset equals 4 mA (20 mA x 20%) or 2 V (10 V x 20%).

AO1 can be used to indicate the internal running parameters in the analog mode. The attribute of parameter indicated is defined by F5-07.

F5-11 **AO1 gain**

Address:	0xF50B	Effective mode:	Real time
Min.:	-10.00	Unit:	-
Max.:	10.00	Data type:	Int16
Default mode:	1.00	Change mode:	At once

Range:

-10.00 to 10.00

Parameter description

On the AO curve, if b indicates zero offset, k indicates gain, and X indicates standard output, the actual output Y is kX plus b (Y = kX + b). The zero offset coefficient 100% of AO1 corresponds to 10 V (or 20 mA). The standard output refers to the value of the analog output at 0 V to 10 V (or 0 mA to 20 mA) output without zero offset or gain adjustment.

Zero offset = Zero offset coefficient x 10 V (or 20 mA)

Assume that the AO terminal outputs the running frequency. The rectified output needs to be 4 mA/2 V (Y1) when the frequency is 0 Hz (X1) and 20 mA/10 V (Y2) when the frequency is 50 Hz (X2). Use the J7 jumper to select voltage output or current output. The gain is calculated as follows: (Y1-Y2) x Xmax/(X1-X2) x Ymax. Xmax is the maximum output frequency (assume the maximum frequency of F0-10 is 50 Hz) and Ymax is the current/voltage (20 mA/10 V). The preceding formula result is 0.8.
AO1 can be used to indicate the internal running parameters in the analog mode. The attribute of parameter indicated is defined by F5-07.

F5-18 **Relay 1 output delay**

Address:	0xF512	Effective mode:	Real time
Min.:	0.0	Unit:	-
Max.:	3600.0	Data type:	UInt16
Default mode:	0.0	Change mode:	At once

Range:
0.0 to 3600.0
Parameter description
This parameter indicates the output delay of relay 1 on the control board. An active signal of the output function set by F5-02 is output after the set delay time elapses.

F5-20 **DI/DO output delay**

Address:	0xF514	Effective mode:	Real time
Min.:	0.0	Unit:	-
Max.:	3600.0	Data type:	UInt16
Default mode:	0.0	Change mode:	At once

Range:
0.0 to 3600.0
Parameter description
This parameter indicates the DI/DO output delay. The DI/DO outputs an active signal after the time set by F5-20 expires.

F5-22 **DO valid status selection**

Address:	0xF516	Effective mode:	Real time
Min.:	0	Unit:	-
Max.:	1010	Data type:	UInt16

Default mode:	0	Change mode:	At once

Range:

Ones: Reserved

0: Positive logic

1: Negative logic

Tens: Relay 1

0: Positive logic

1: Negative logic

Hundreds: Reserved

0: Positive logic

1: Negative logic

Thousands: DI/DO

0: Positive logic

1: Negative logic

Parameter description

The tens and thousands places of F5-22 are used to set the active mode of terminals to which F5-02 and F5-04 correspond.

0: Positive logic (same as NO contact)

Active state: The DO and the COM/CME terminal are internally connected.

Inactive state: The DO is disconnected from the COM/CME terminal.

1: Negative logic (same as NC contact)

Active state: The DO is disconnected from the COM/CME terminal.

Inactive state: The DO and the COM/CME terminal are internally connected.

9.6 F6 Start/Stop Control Parameters

F6-00 Start mode

Address:	0xF600	Effective mode:	Real time
Min.:	0	Unit:	-
Max.:	1	Data type:	UInt16
Default mode:	0	Change mode:	At once

Range:

0: Direct start

1: Flying start

Parameter description

This parameter is used to set the start mode of the motor. Flying start is recommended if you need to start a motor that is rotating at a high speed.

0: Direct start
This mode is applicable to most load applications. Startup with the startup frequency is applicable to load hoisting applications such as elevators and cranes.
1: Flying start
In some applications, the motor rotates before the AC drive is started. In flying start, the AC drive tracks the motor speed and direction automatically to start the spinning motor without impact. For example, when an instantaneous power failure of the grid occurs, the AC drive in the running state is powered off, but the motor is still running due to inertia. In this case, the AC drive must detect the actual speed of the motor to control the asynchronous motor again. Otherwise, overcurrent or overvoltage can occur on the AC drive during start, which may damage the power transistor of the AC drive.

F6-01 **Flying start mode**

Address:	0xF601	Effective mode:	Real time
Min.:	0	Unit:	-
Max.:	2	Data type:	UInt16
Default mode:	0	Change mode:	At stop

Range:
0: From the stop frequency
1: From the mains frequency
2: From the maximum frequency
Parameter description
This parameter indicates the start frequency for the flying start mode upon restart.
The start frequency of flying start upon restart varies with different modes.
0: From the stop frequency
The search mode from the stop frequency is to search for 0 Hz from the frequency at the previous stop. If external force drives the motor to a speed higher than the speed at stop, this mode is not applicable.
1: From the mains frequency
This mode is applicable to the scenario where the mains frequency is switched to the variable frequency and the motor is restarted after stop for a long time.
2: From the maximum frequency
Frequency tracking starts from the maximum frequency to a lower frequency. This mode is applicable to generating load.

F6-03 **Startup frequency**

Address:	0xF603	Effective mode:	Real time
Min.:	0.00	Unit:	Hz
Max.:	10.00	Data type:	UInt16
Default mode:	0.00	Change mode:	At once

Range:

0.00 to 10.00

Parameter description

This parameter defines the startup frequency for direct start of the drive. When the startup frequency is higher than the frequency reference (F0-08), the AC drive will not start but stay standby.

F6-04 **Startup frequency hold time**

Address:	0xF604	Effective mode:	Real time
Min.:	0.0	Unit:	-
Max.:	100.0	Data type:	UInt16
Default mode:	0.0	Change mode:	At stop

Range:

0.0 to 100.0

Parameter description

This parameter defines the hold time during which the output frequency remains at the startup frequency (F6-03). After this hold time expires, the AC drive will accelerate from the output frequency to the frequency reference (F0-08).

F6-07 **Acceleration/Deceleration mode**

Address:	0xF607	Effective mode:	Real time
Min.:	0	Unit:	-
Max.:	2	Data type:	UInt16
Default mode:	0	Change mode:	At stop

Range:

0: Linear acceleration/deceleration

1: Static S-curve acceleration/deceleration

2: Dynamic S-curve acceleration/deceleration

Parameter description

This parameter defines the frequency change mode during start and stop of the drive.
0: The output frequency increases or decreases linearly.
1-2: The output frequency increases or decreases according to the S-curve when the target frequency changes dynamically. This mode is applicable to applications requiring smooth running and quick response in real time.

F6-08 **Time proportion of S-curve start segment**

Address:	0xF608	Effective mode:	Real time
Min.:	0.0	Unit:	%
Max.:	100.0	Data type:	UInt16
Default mode:	30.0	Change mode:	At stop

Range:
0.0 to 100.0
Parameter description
The sum of this parameter and F6-09 (Time proportion of S-curve end segment) must be less than or equal to 100%.

F6-09 **Time proportion of S-curve end segment**

Address:	0xF609	Effective mode:	Real time
Min.:	0.0	Unit:	%
Max.:	100.0	Data type:	UInt16
Default mode:	30.0	Change mode:	At stop

Range:
0.0 to 100.0
Parameter description
The sum of F6-08 (Time proportion of S-curve start segment) and this parameter must be less than or equal to 100%.

F6-10 **Stop mode**

Address:	0xF60A	Effective mode:	Real time
Min.:	0	Unit:	-
Max.:	1	Data type:	UInt16
Default mode:	0	Change mode:	At once

Range:
0: Decelerate to stop
1: Coast to stop

Parameter description

This parameter is used to select the stop mode of the AC drive.

0: Decelerate to stop

Upon receiving the stop command, the AC drive decreases the output frequency to 0 and then stops based on the deceleration time.

1: Coast to stop

Upon receiving the stop command, the AC drive immediately stops output. The motor then coasts to stop according to the mechanical inertia.

F6-11 **Start frequency of DC braking for stop**

Address:	0xF60B	Effective mode:	Real time
Min.:	0.00	Unit:	Hz
Max.:	10.00	Data type:	UInt16
Default mode:	0.00	Change mode:	At once

Range:

0.00 to 10.00

Parameter description

During decelerating to stop, the drive starts DC braking when the operating frequency drops below the value of F6-11.

F6-12 **DC braking waiting time for stop**

Address:	0xF60C	Effective mode:	Real time
Min.:	0.0	Unit:	-
Max.:	100.0	Data type:	UInt16
Default mode:	0.0	Change mode:	At once

Range:

0.0 to 100.0

Parameter description

When the operating frequency decreases to the starting frequency of DC braking for stop, the drive stops output temporarily and then starts DC braking. This parameter is used to prevent faults such as overcurrent when DC braking starts at a high speed.

F6-13 **DC braking current for stop**

Address:	0xF60D	Effective mode:	Real time
Min.:	0	Unit:	%
Max.:	100	Data type:	UInt16

Default mode:	50	Change mode:	At once

Range:
0 to 100

Parameter description
The higher the DC braking current, the stronger the braking force. The value 100.0% corresponds to the rated current of the motor. The default upper limit of the DC braking current for stop is 80% of the rated drive current,

F6-14 **DC braking time for stop**

Address:	0xF60E	Effective mode:	Real time
Min.:	0.0	Unit:	-
Max.:	100.0	Data type:	UInt16
Default mode:	0.0	Change mode:	At once

Range:
0.0 to 100.0

Parameter description
This parameter specifies the hold time of DC braking. If it is set to 0, DC braking is canceled.

F6-21 **Demagnetization time (valid in SVC mode)**

Address:	0xF615	Effective mode:	Real time
Min.:	0.00	Unit:	-
Max.:	5.00	Data type:	UInt16
Default mode:	0.50	Change mode:	At stop

Range:
0.00 to 5.00

Parameter description
In the vector mode, when flying start is enabled (F6-00 = 1) and the motor has residual magnetism, the AC drive cannot be started. After the voltage output of the AC drive is disconnected for at least the time set by F6-21, the AC drive can be started.

F6-22 **-**

Address:	0xF616	Effective mode:	Real time
Min.:	0.00	Unit:	Hz
Max.:	F6-11	Data type:	UInt16

Default mode:	0.00	Change mode:	At once

Range:
0.00 to F6-11
Parameter description
-

F6-23 **-**

Address:	0xF617	Effective mode:	Real time
Min.:	1	Unit:	-
Max.:	100	Data type:	UInt16
Default mode:	10	Change mode:	At once

Range:
1 to 100
Parameter description
-

9.7 F7 Operating Panel and Display Parameters

F7-00 **LED default display check**

Address:	0xF700	Effective mode:	Real time
Min.:	0	Unit:	-
Max.:	5	Data type:	UInt16
Default mode:	0	Change mode:	At stop

Range:
0: Display during running or at stop
1: Display when Up/Down keys are pressed
2: Undervoltage alarm display
3: Fault/Alarm display
4: Parameter auto-tuning display
5: LED detection display
Parameter description
This parameter is used to enable or disable the LED default display check.

F7-01 **MF.K key function selection**

Address:	0xF701	Effective mode:	Real time
Min.:	0	Unit:	-

Max.:	5	Data type:	UInt16
Default mode:	5	Change mode:	At stop

Range:

0: MF.K key unavailable

1: Switchover between the operating panel control mode and remote command control mode

2: Switchover between forward run and reverse run

3: Forward jog (long press MF.K to start jog and release the key to end)

4: Reverse jog (long press MF.K to start jog and release the key to end)

5: Reserved

Parameter description

The MF.K key is a multi-functional key. This parameter is used to set the function of the MF.K key.

0: MF.K key unavailable

The MF.K key does not work.

1: Switchover between the operating panel control mode and remote command control mode (terminal or communication). When F0-02 is set to 0 (operating panel), the MF.K key does not work. When F0-02 is set to 1 (terminal), the MF.K key is used for switchover between the terminal control mode and the operating panel control mode. When F0-02 is set to 2 (communication), the MF.K key is used for switchover between the communication control mode and operating panel control mode.

2: Switchover between forward run and reverse run

The MF.K key is used for changing the direction of the frequency reference. This function is valid only when the operating panel is set as the command source.

3: Forward jog

The MF.K key is used for enabling forward jog (FJOG). This function is valid only when the operating panel is set as the command source.

4: Reverse jog

The MF.K key is used for enabling reverse jog (RJOG). This function is valid only when the operating panel is set as the command source.

5: Reserved

F7-02 STOP/RESET key availability

Address:	0xF702	Effective mode:	Real time
Min.:	0	Unit:	-
Max.:	1	Data type:	UInt16
Default mode:	1	Change mode:	At once

Range:

0: STOP/RESET key available only in operating panel control mode
1: STOP/RESET key available in any operation mode

Parameter description

The STOP/RESET key on the operating panel is used for stop/reset. This parameter is used to set the availability of the STOP/RESET key.
0: STOP/RESET key available only in operating panel control mode
The STOP/RESET key is valid only in the operating panel control mode.
1: STOP/RESET key available in any operating mode
The STOP/RESET key is valid in any operating mode.

F7-03 **Parameter 1 displayed on LED operating panel during operation**

Address:	0xF703	Effective mode:	Real time
Min.:	0x0	Unit:	-
Max.:	0xFFFF	Data type:	UInt16
Default mode:	0x1F	Change mode:	At once

Range:

Bit 0: Running frequency (Hz)
Bit 1: Frequency reference (Hz)
Bit 2: Bus voltage (V)
Bit 3: Output voltage (V)
Bit 4: Output current (A)
Bit 5: Output power (kW)
Bit 6: Output torque (%)
Bit 7: DI status
Bit 8: DO status
Bit 9: AI1 voltage (V)
Bit 10: Reserved
Bit 11: Voltage of external operating panel potentiometer (V)
Bit 12: Count value
Bit 13: Length value
Bit 14: Load speed display
Bit 15: PID reference

Parameter description

If a parameter needs to be displayed during running, set its corresponding bit to 1. After converting the binary number to a hexadecimal number, set this parameter to the hexadecimal number.
1. This parameter defines parameters displayed on the LED operating panel during operation.
2. You can view the parameters corresponding to each bit by pressing the left and right shift keys.
3. When the bit value is 1, the parameter is displayed. When the bit value is 0, the parameter is not displayed.
4. Each parameter is displayed in the hexadecimal.
For example, if you need to display the bus voltage, output power, and PID reference during operation, set bit 2, bit 5, and bit 15 to 1 (namely, 1000 0000 0010 0100). Convert the binary data to the hexadecimal equivalent 8024 and then set this parameter to 8024.

F7-04 **Parameter 2 displayed on LED operating panel during operation**

Address:	0xF704	Effective mode:	Real time
Min.:	0x0	Unit:	-
Max.:	0xFFFF	Data type:	UInt16
Default mode:	0x0	Change mode:	At once

Range:
Bit 0: PID feedback
Bit 1: PLC stage
Bit 2: Pulse input frequency (kHz)
Bit 3: Running frequency 2 (Hz)
Bit 4: Remaining running time
Bit 5: AI1 voltage before correction (V)
Bit 6: Voltage of external operating panel potentiometer before correction (V)
Bit 7: Reserved
Bit 8: Motor speed (applicable only to single-phase MD200SXX models)
Bit 9: Current power-on time (hour)
Bit 10: Current running time (min.)
Bit 11: Pulse input frequency (Hz)
Bit 12: Communication setting value
Bit 13: Reserved
Bit 14: Main frequency X display
Bit 15: Auxiliary frequency Y display
Description

If a parameter needs to be displayed during running, set its corresponding bit to 1. After converting the binary number to a hexadecimal number, set F7-04 to the hexadecimal number.

1. This parameter defines parameters displayed on the LED operating panel during operation.
2. You can view the parameters corresponding to each bit by pressing the left and right shift keys.
3. When the bit value is 1, the parameter is displayed. When the bit value is 0, the parameter is not displayed.
4. Each parameter is displayed in the hexadecimal.

For example, if you need to display the remaining running time, current power-on time, and main frequency X during operation, set bit 4, bit 9, and bit 14 to 1 (namely, 0100 0010 0001 0000). Convert the binary data to the hexadecimal equivalent 4210 and then set this parameter to 4210.

F7-05 **Parameter displayed on LED operating panel at stop**

Address:	0xF705	Effective mode:	Real time
Min.:	0x1	Unit:	-
Max.:	0xFFFF	Data type:	UInt16
Default mode:	0x13	Change mode:	At once

Range:

Bit 0: Frequency reference (Hz)
Bit 1: Bus voltage (V)
Bit 2: DI state
Bit 3: DO state
Bit 4: AI1 voltage (V)
Bit 5: Reserved
Bit 6: Voltage (V) input through external operating panel potentiometer
Bit 7: Count value
Bit 8: Length value
Bit 9: PLC stage
Bit 10: Load speed
Bit 11: PID reference
Bit 12: Pulse input frequency (kHz)

Parameter description

If a parameter needs to be displayed when the AC drive stops, set its corresponding bit to 1. After converting the binary number to a hexadecimal number, set F7-05 to the hexadecimal number.
1. This parameter defines the parameters displayed on the LED operating panel at stop.
2. You can view the parameters corresponding to each bit by pressing the left and right shift keys.
3. When the bit value is 1, the parameter is displayed. When the bit value is 0, the parameter is not displayed.
4. Each parameter is displayed in the hexadecimal.
For example, if you need to display the DI status, AI3 voltage (V), and pulse input frequency (kHz) at stop, set bit 2, bit 6, and bit 12 to 1 (namely, 0001 0000 0100 0100). Convert the binary data to the hexadecimal equivalent 1044 and then set this parameter to 1044.

F7-06 **Load transmission ratio**

Address:	0xF706	Effective mode:	Real time
Min.:	0.001	Unit:	-
Max.:	65.000	Data type:	UInt16
Default mode:	1.000	Change mode:	At once

Range:
0.001 to 65.000
Parameter description
This parameter indicates the ratio between the actual load and motor speed. You can change the load speed display (U0-14) through this coefficient.

F7-07 **Inverter heatsink temperature**

Address:	0xF707	Effective mode:	Real time
Min.:	0	Unit:	℃
Max.:	999	Data type:	Int16
Default mode:	0	Change mode:	Unchangeable

Range:
0 to 999
Parameter description
This parameter indicates the inverter heatsink temperature.

F7-08 **Product No.**

Address:	0xF708	Effective mode:	Real time

Min.:	0.00	Unit:	-
Max.:	655.35	Data type:	UInt16
Default mode:	0.00	Change mode:	Unchangeable:

Range:

0.00 to 655.35

Parameter description

This parameter displays the product No. of the AC drive.

F7-09 **Cumulative running time**

Address:	0xF709	Effective mode:	Real time
Min.:	0	Unit:	h
Max.:	65535	Data type:	UInt16
Default mode:	0	Change mode:	Unchangeable

Range:

0 to 65535

Parameter description

This parameter indicates the accumulative running time of the AC drive.

F7-10 **Performance software version**

Address:	0xF70A	Effective mode:	Real time
Min.:	0.00	Unit:	-
Max.:	655.35	Data type:	UInt16
Default mode:	0.00	Change mode:	Unchangeable

Range:

0.00 to 655.35

Parameter description

This parameter indicates the performance software version of the AC drive.

F7-11 **Function software version**

Address:	0xF70B	Effective mode:	Real time
Min.:	0.00	Unit:	-
Max.:	655.35	Data type:	UInt16
Default mode:	0.00	Change mode:	Unchangeable

Range:

0.00 to 655.35

Parameter description

This parameter indicates the function software version of the AC drive.

F7-12 Number of decimal places for load speed display

Address:	0xF70C	Effective mode:	Real time
Min.:	10	Unit:	-
Max.:	22	Data type:	UInt16
Default mode:	20	Change mode:	At once

Range:

Ones: Number of decimal places for the value of U0-14

0: 0

1: 1

2: 2

Tens: Number of decimal places for the value of U0-19

1: 1

2: 2

Parameter description

The ones place of this parameter is used to set the number of decimal places for U0-14 (load speed), and the tens place of this parameter is used to set the number of decimal places for U0-19 (feedback speed).

0: 0 decimal place

1: One decimal place

2: Two decimal places

3: Three decimal places

F7-13 Cumulative power-on time

Address:	0xF70D	Effective mode:	Real time
Min.:	0	Unit:	h
Max.:	65535	Data type:	UInt16
Default mode:	0	Change mode:	Unchangeable

Range:

0 to 65535

Parameter description

This parameter indicates the cumulative power-on time of the AC drive.

F7-14 Cumulative power consumption

Address:	0xF70E	Effective mode:	Real time

Min.:	0	Unit:	kWh
Max.:	65535	Data type:	UInt16
Default mode:	0	Change mode:	Unchangeable

Range:
0 to 65535

Parameter description
This parameter indicates the cumulative power consumption of the AC drive.

F7-15 **Temporary performance software version**

Address:	0xF70F	Effective mode:	Real time
Min.:	0.00	Unit:	-
Max.:	655.35	Data type:	UInt16
Default mode:	0.00	Change mode:	Unchangeable:

Range:
0.00 to 655.35

Parameter description
This parameter indicates the temporary performance software version of the AC drive.

F7-16 **Temporary function software version**

Address:	0xF710	Effective mode:	Real time
Min.:	0.00	Unit:	-
Max.:	655.35	Data type:	UInt16
Default mode:	0.00	Change mode:	Unchangeable:

Range:
0.00 to 655.35

Parameter description
This parameter indicates the temporary function software version of the AC drive.

9.8 F8 Auxiliary Functions

F8-00 **Jog frequency**

Address:	0xF800	Effective mode:	Real time
Min.:	0.00	Unit:	Hz
Max.:	F0-10	Data type:	UInt16

Default mode:	2.00	Change mode:	At once

Range:

0.00 to F0-10

Parameter description

This parameter defines the running frequency of the AC drive in the jog mode.

F8-01 Jog acceleration time

Address:	0xF801	Effective mode:	Real time
Min.:	0.0	Unit:	-
Max.:	6500.0	Data type:	UInt16
Default mode:	20.0	Change mode:	At once

Range:

0.0 to 6500.0

Parameter description

This parameter defines the acceleration time of the AC drive in the jog mode.

F8-02 Jog deceleration time

Address:	0xF802	Effective mode:	Real time
Min.:	0.0	Unit:	-
Max.:	6500.0	Data type:	UInt16
Default mode:	20.0	Change mode:	At once

Range:

0.0 to 6500.0

Parameter description

This parameter defines the deceleration time of the AC drive in the jog mode.

F8-03 Acceleration time 2

Address:	0xF803	Effective mode:	Real time
Min.:	0.0	Unit:	-
Max.:	6500.0	Data type:	UInt16
Default mode:	20.0	Change mode:	At once

Range:

0.0 to 6500.0

Parameter description

The AC drive provides four groups of acceleration time, which can be switched by the DI. This parameter defines the second group of acceleration time.

F8-04 **Deceleration time 2**

Address:	0xF804	Effective mode:	Real time
Min.:	0.0	Unit:	-
Max.:	6500.0	Data type:	UInt16
Default mode:	20.0	Change mode:	At once

Range:

0.0 to 6500.0

Parameter description

The AC drive provides four groups of deceleration time, which can be switched by the DI. This parameter defines the second group of deceleration time.

F8-07 **Acceleration time 4**

Address:	0xF807	Effective mode:	Real time
Min.:	0.0	Unit:	-
Max.:	6500.0	Data type:	UInt16
Default mode:	0.0	Change mode:	At once

Range:

0.0 to 6500.0

Parameter description

The AC drive provides four groups of acceleration time, which can be switched by the DI. This parameter defines the fourth group of acceleration time.

F8-08 **Deceleration time 4**

Address:	0xF808	Effective mode:	Real time
Min.:	0.0	Unit:	-
Max.:	6500.0	Data type:	UInt16
Default mode:	0.0	Change mode:	At once

Range:

0.0 to 6500.0

Parameter description

The AC drive provides four groups of deceleration time, which can be switched by the DI. This parameter defines the fourth group of deceleration time.

F8-12 **Dead-zone time of forward/reverse run**

Address:	0xF80C	Effective mode:	Real time

Min.:	0.0	Unit:	-
Max.:	3000.0	Data type:	UInt16
Default mode:	0.0	Change mode:	At once

Range:

0.0 to 3000.0

Parameter description

This parameter defines the transition time at 0 Hz output during transition between forward running and reverse running.

F8-13 **Reverse running prohibition**

Address:	0xF80D	Effective mode:	Real time
Min.:	0	Unit:	-
Max.:	1	Data type:	UInt16
Default mode:	0	Change mode:	At once

Range:

0: Disable

1: Enable

Parameter description

When F8-13 is valid, the motor runs at zero frequency after a reverse command is input to the AC drive.

F8-14 **Running mode when running frequency is below the frequency lower limit**

Address:	0xF80E	Effective mode:	Real time
Min.:	0	Unit:	-
Max.:	2	Data type:	UInt16
Default mode:	0	Change mode:	At once

Range:

0: Run at frequency lower limit

1: Stop

2: Run at zero speed

Parameter description

0: Run at frequency lower limit

If the running frequency is lower than the frequency lower limit, the AC drive operates at the frequency lower limit.

1: Stop
If the running frequency is lower than the frequency lower limit, the AC drive stops in the mode set by F6-10.
2: Run at zero speed
If the running frequency is lower than the frequency lower limit, the AC drive operates at zero speed.

F8-16 Cumulative power-on time threshold

Address:	0xF810	Effective mode:	Real time
Min.:	0	Unit:	h
Max.:	65000	Data type:	UInt16
Default mode:	0	Change mode:	At once

Range:
0 to 65000

Parameter description
This parameter is used to set the cumulative power-on time threshold of the AC drive. When F7-13 (cumulative power-on time) exceeds F8-16 (cumulative power-on time threshold), the DO outputs an active signal.

F8-17 Cumulative running time threshold

Address:	0xF811	Effective mode:	Real time
Min.:	0	Unit:	h
Max.:	65000	Data type:	UInt16
Default mode:	0	Change mode:	At once

Range:
0 to 65000

Parameter description
This parameter is used to set the cumulative running time threshold of the AC drive. When F7-09 (cumulative running time) exceeds F8-17 (cumulative running time threshold), the DO outputs an active signal.

F8-18 Protection upon start

Address:	0xF812	Effective mode:	Real time
Min.:	0	Unit:	-
Max.:	1	Data type:	UInt16
Default mode:	0	Change mode:	At once

Range:

0: Disable
1: Enable

Parameter description

The drive is equipped with startup protection to prevent the motor from responding to commands upon unexpected power-on or fault reset.

F8-19 Detection frequency (FDT1)

Address:	0xF813	Effective mode:	Real time
Min.:	0.00	Unit:	Hz
Max.:	F0-10	Data type:	UInt16
Default mode:	50.00	Change mode:	At once

Range:

0.00 to F0-10

Parameter description

When the running frequency is higher than the detection frequency (FDT1), the DO terminal outputs an active signal. When the running frequency is lower than the result of the detection frequency (FDT1) minus the frequency detection hysteresis value (FDT1), the DO terminal outputs an inactive signal.

F8-20 Frequency detection hysteresis (FDT1)

Address:	0xF814	Effective mode:	Real time
Min.:	0.0	Unit:	%
Max.:	100.0	Data type:	UInt16
Default mode:	5.0	Change mode:	At once

Range:

0.0 to 100.0

Parameter description

The frequency detection hysteresis value (FDT1) is the result of F8-19 multiplied by F8-20. When the running frequency is higher than F8-19, the DO outputs an active signal. When the running frequency is lower than a specific value (F8-19 - F8-19 x F8-20), the DO outputs an inactive signal.

F8-21 Frequency detection amplitude

Address:	0xF815	Effective mode:	Real time
Min.:	0.0	Unit:	%
Max.:	100.0	Data type:	UInt16
Default mode:	0.0	Change mode:	At once

Range:
0.0 to 100.0
Parameter description
When the running frequency of the AC drive is within the range of Reference frequency ± Maximum frequency (F0-10) x Frequency detection amplitude (F8-21), the DO outputs an active signal.
Note 1: The maximum frequency is used as the base of percentage.
Note 2: The range includes the maximum and minimum values.

F8-25 Switchover frequency between acceleration time 1 and acceleration time 2

Address:	0xF819	Effective mode:	Real time
Min.:	0.00	Unit:	Hz
Max.:	F0-10	Data type:	UInt16
Default mode:	0.00	Change mode:	At once

Range:
0.00 to F0-10
Parameter description
This parameter is used to select the acceleration/deceleration time based on the running frequency range during operation. This function is valid only when motor 1 is selected (F0-24 = 0) and the DI function is not set to 16 (acceleration/deceleration time selection terminal 1) or 17 (acceleration/deceleration time selection terminal 2).

F8-26 Switchover frequency between deceleration time 1 and deceleration time 2

Address:	0xF81A	Effective mode:	Real time
Min.:	0.00	Unit:	Hz
Max.:	F0-10	Data type:	UInt16
Default mode:	0.00	Change mode:	At once

Range:
0.00 to F0-10
Parameter description
This parameter is used to select the acceleration/deceleration time based on the running frequency range during operation. This function is valid only when motor 1 is selected (F0-24 = 0) and the DI function is not set to 16 (acceleration/deceleration time selection terminal 1) or 17 (acceleration/deceleration time selection terminal 2).

F8-27 **Jog control through terminal with priority**

Address:	0xF81B	Effective mode:	Real time
Min.:	0	Unit:	-
Max.:	1	Data type:	UInt16
Default mode:	0	Change mode:	At once

Range:

0: Disable

1: Enable

Parameter description

This parameter defines whether to set the highest priority to the jog function allocated to the terminal. When F8-27 is set to 1 and any of F4-00 to F4-09 is set to 4 (forward jog) or 5 (reverse jog) during operation, the AC drive enters the jog state immediately.

F8-30 **Base value 1 of frequency detection**

Address:	0xF81E	Effective mode:	Real time
Min.:	0.00	Unit:	Hz
Max.:	F0-10	Data type:	UInt16
Default mode:	50.00	Change mode:	At once

Range:

0.00 to F0-10

Parameter description

When the running frequency of the AC drive is within the frequency detection range, the DO outputs an active signal.

F8-31 **Frequency detection amplitude 1**

Address:	0xF81F	Effective mode:	Real time
Min.:	0.0	Unit:	%
Max.:	100.0	Data type:	UInt16
Default mode:	0.0	Change mode:	At once

Range:

0.0 to 100.0

Parameter description

Frequency detection amplitude value 1 = F0-10 (maximum frequency) x F8-31;

Frequency detection range: F8-30 - F8-31 x F0-10 to F8-30 + F8-31 x F0-10

F8-34 **Zero current detection value**

Address:	0xF822	Effective mode:	Real time
Min.:	0.0	Unit:	%
Max.:	300.0	Data type:	UInt16
Default mode:	5.0	Change mode:	At once

Range:

0.0 to 300.0

Parameter description

When the output current of the AC drive is lower than or equal to F8-34 (zero current detection value) for a period exceeding F8-35 (zero current detection delay), the DO outputs an active signal.

F8-35 **Zero current detection delay**

Address:	0xF823	Effective mode:	Real time
Min.:	0.01	Unit:	-
Max.:	600.00	Data type:	UInt16
Default mode:	0.10	Change mode:	At once

Range:

0.01 to 600.00

Parameter description

When the output current of the AC drive is lower than or equal to F8-34 (zero current detection value) for a period exceeding F8-35 (zero current detection delay), the DO outputs an active signal.

F8-36 **Output current overlimit threshold**

Address:	0xF824	Effective mode:	Real time
Min.:	0.0	Unit:	%
Max.:	300.0	Data type:	UInt16
Default mode:	200.0	Change mode:	At once

Range:

0.0 to 300.0

Parameter description

When the output current of the AC drive is higher than F8-36 (output current threshold) for a period longer than or equal to F8-37 (output overcurrent detection delay), the DO outputs an active signal.

F8-37 **Delay of output current overlimit detection**

Address:	0xF825	Effective mode:	Real time
Min.:	0.00	Unit:	-
Max.:	600.00	Data type:	UInt16
Default mode:	0.00	Change mode:	At once

Range:

0.00 to 600.00

Parameter description

When the output current of the AC drive is higher than F8-36 (output current threshold) for a period longer than or equal to F8-37 (output overcurrent detection delay), the DO outputs an active signal.

F8-38 **Base value 1 of current detection**

Address:	0xF826	Effective mode:	Real time
Min.:	0.0	Unit:	%
Max.:	300.0	Data type:	UInt16
Default mode:	100.0	Change mode:	At once

Range:

0.0 to 300.0

Parameter description

When the output current of the drive is in the range of F8-38 ± F8-39 x F1-03, the DO outputs an active signal.

F8-39 **Current detection amplitude 1**

Address:	0xF827	Effective mode:	Real time
Min.:	0.0	Unit:	%
Max.:	300.0	Data type:	UInt16
Default mode:	0.0	Change mode:	At once

Range:

0.0 to 300.0

Parameter description

Current detection amplitude value 1 = F8-39 x F1-03 (rated motor current).

F8-42 **Timing function**

Address:	0xF82A	Effective mode:	Real time
Min.:	0	Unit:	-

Max.:	1	Data type:	UInt16
Default mode:	0	Change mode:	At stop

Range:

0: Disable

1: Enable

Parameter description

When F8-42 is set to 1 and the current running time of the AC drive reaches the set timing duration, the DO outputs an active signal. The timing duration is set by F8-43 and F8-44.

F8-43 Timing operation setting source

Address:	0xF82B	Effective mode:	Real time
Min.:	0	Unit:	-
Max.:	2	Data type:	UInt16
Default mode:	0	Change mode:	At stop

Range:

0: F8-44

1: AI1

2: External operating panel potentiometer

Parameter description

When this parameter is set to 0, the timing operation time is set by F8-44.

When this parameter is set 1, the timing operation time is equal to the result of (AI1 voltage/10 V) x F8-44. 100% of analog input corresponds to the value of F8-44.

When this parameter is set to 2, the timing operation time is equal to the result of (Voltage of external operating panel potentiometer/10 V) x F8-44. 100% of analog input corresponds to the value of F8-44.

F8-44 Timing operation duration

Address:	0xF82C	Effective mode:	Real time
Min.:	0.0	Unit:	min
Max.:	6500.0	Data type:	UInt16
Default mode:	0.0	Change mode:	At stop

Range:

0.0 to 6500.0

Parameter description

The timing operation duration is set by F8-43 and F8-44.

When F8-43 is set to 0, the timing operation duration is set by F8-44.
When F8-43 is set to 1, the timing operation duration is equal to the result of AI1 voltage/10 V x F8-44. 100% of analog input corresponds to the value of F8-44.

F8-45 Lower limit of AI1 input voltage protection value

Address:	0xF82D	Effective mode:	Real time
Min.:	0.00	Unit:	V
Max.:	F8-46	Data type:	UInt16
Default mode:	3.10	Change mode:	At once

Range:
0.00 to F8-46

Parameter description
When the AI1 value is higher than F8-46 (Upper limit of AI1 input voltage protection value) or lower than F8-45 (Lower limit of AI1 input voltage protection value), the DO outputs an "AI1 input limit exceeded" active signal to indicate whether the AI1 input voltage is in the setting range.

F8-46 Upper limit of AI1 input voltage protection value

Address:	0xF82E	Effective mode:	Real time
Min.:	F8-45	Unit:	V
Max.:	11.00	Data type:	UInt16
Default mode:	6.80	Change mode:	At once

Range:
F8-45 to 11.00

Parameter description
When the AI1 value is higher than F8-46 (Upper limit of AI1 input voltage protection value) or lower than F8-45 (lower limit of AI1 input voltage protection value), the DO outputs an "AI1 input limit exceeded" active signal to indicate whether the AI1 input voltage is in the setting range.

F8-48 Cooling fan control

Address:	0xF830	Effective mode:	Real time
Min.:	0	Unit:	-
Max.:	2	Data type:	UInt16
Default mode:	0	Change mode:	At once

Range:

0: The fan keeps working during operation of the drive.
1: The fan always works.
2: The fan works at specified temperature.

Parameter description

0: When this parameter is set to 0, the fan works when the AC drive is running. When the AC drive stops, the fan works if the heatsink temperature is higher than 40℃ and stops if the heatsink temperature is lower than 40℃.
1: When this parameter is set to 1, the fan keeps working after power-on.

F8-49 Wakeup frequency

Address:	0xF831	Effective mode:	Real time
Min.:	F8-51	Unit:	Hz
Max.:	F0-10	Data type:	UInt16
Default mode:	0.00	Change mode:	At once

Range:

F8-51 to F0-10

Parameter description

In the hibernating state, when the frequency reference is equal to or larger than F8-49 (wakeup frequency) and the current running command is valid, the AC drive starts directly after the time set by F8-50 (wakeup delay) expires.

F8-50 Wakeup delay

Address:	0xF832	Effective mode:	Real time
Min.:	0.0	Unit:	-
Max.:	6500.0	Data type:	UInt16
Default mode:	0.0	Change mode:	At once

Range:

0.0 to 6500.0

Parameter description

In the hibernating state, when the frequency reference is equal to or larger than F8-49 (wakeup frequency) and the current running command is valid, the AC drive starts directly after the time set by F8-50 (wakeup delay) expires.

F8-51 Sleep frequency

Address:	0xF833	Effective mode:	Real time
Min.:	0.00	Unit:	Hz
Max.:	F8-49	Data type:	UInt16

Default mode:	0.00	Change mode:	At once

Range:
0.00 to F8-49

Parameter description
During AC drive running, when the frequency reference is lower than or equal to F8-51 (hibernation frequency) for the time longer than the value of F8-52 (hibernation delay), the AC drive enters the hibernating state and coasts to stop.

F8-52 **Hibernation delay**

Address:	0xF834	Effective mode:	Real time
Min.:	0.0	Unit:	-
Max.:	6500.0	Data type:	UInt16
Default mode:	0.0	Change mode:	At once

Range:
0.0 to 6500.0

Parameter description
During AC drive running, when the frequency reference is lower than or equal to F8-51 (hibernation frequency) for the time longer than the value of F8-52 (hibernation delay), the AC drive enters the hibernating state and coasts to stop.

F8-53 **Present running time reach settings**

Address:	0xF835	Effective mode:	Real time
Min.:	0.0	Unit:	min
Max.:	6500.0	Data type:	UInt16
Default mode:	0.0	Change mode:	At stop

Range:
0.0 to 6500.0

Parameter description
When the present running time reaches the value of F8-53, the DO outputs an active signal. This parameter is valid only for the present AC drive running time. The previous running time is not accumulated.

F8-54 **Output power correction coefficient**

Address:	0xF836	Effective mode:	Real time
Min.:	0.0	Unit:	%

Max.:	200.0	Data type:	UInt16
Default mode:	100.0	Change mode:	At once

Range:

0.0 to 200.0

Parameter description

When the output power (U0-05) is not equal to the expected value, perform linear correction on the output power through this parameter.

F8-55 Deceleration time for emergency stop

Address:	0xF837	Effective mode:	Real time
Min.:	0.0	Unit:	-
Max.:	6500.0	Data type:	UInt16
Default mode:	10.0	Change mode:	At once

Range:

0.0 to 6500.0

Parameter description

This parameter defines the deceleration time for emergency stop.

F8-57 Speed proportional synchronous control

Address:	0xF839	Effective mode:	Real time
Min.:	0	Unit:	-
Max.:	1	Data type:	UInt16
Default mode:	0	Change mode:	At stop

Range:

0: Disable

1: Enable

Parameter description

If this parameter is enabled, the master/slave control function is active. Otherwise, it is invalid.

F8-58 Master/Slave selection in synchronous control

Address:	0xF83A	Effective mode:	Real time
Min.:	0	Unit:	-
Max.:	1	Data type:	UInt16
Default mode:	0	Change mode:	At stop

Range:

0: Master

1: Slave

Parameter description

This parameter is used to set the AC drive as the master or slave in the synchronization control mode.

9.9 F9 Fault and Protection Parameters

F9-00 **Motor overload protection selection**

Address:	0xF900	Effective mode:	Real time
Min.:	0	Unit:	-
Max.:	1	Data type:	UInt16
Default mode:	1	Change mode:	At once

Range:

0: Disable

1: Enable

Parameter description

This parameter specifies whether to enable the motor overload protection function. The AC drive judges whether the motor is overloaded based on the inverse time-lag curve. When motor overload is detected, the AC drive reports an overload fault.

0: Disable

Motor overload protection is disabled. If this parameter is set to 0, it is recommended to install a thermal relay before the motor for protection.

1: Enable

Motor overload protection is enabled.

F9-01 **Motor overload protection gain**

Address:	0xF901	Effective mode:	Real time
Min.:	0.20	Unit:	-
Max.:	10.00	Data type:	UInt16
Default mode:	1.00	Change mode:	At once

Range:

0.20 to 10.00

Parameter description

This parameter is used to adjust the actual overload fault report time of the AC drive when motor overload occurs.
The motor overload protection gain is calculated according to the percentage of time when the motor runs continuously at a certain overload point without reporting an overload fault.

F9-02 **Motor overload warning coefficient**

Address:	0xF902	Effective mode:	Real time
Min.:	50	Unit:	%
Max.:	100	Data type:	UInt16
Default mode:	80	Change mode:	At once

Range:
50 to 100

Parameter description
The motor overload warning coefficient is calculated according to the percentage of time during which the motor runs continuously at a certain overload threshold without reporting the overload warning. A warning signal is sent to the control system through the DO before motor overload protection.
The signal is used to determine how long in advance to send the warning signal before the motor overload protection is triggered. The higher the coefficient is, the later the alarm signal is sent.
When the cumulative output current of the AC drive is higher than the value of the overload time (value Y of motor overload protection inverse time-lag curve) multiplied by F9-02 (motor overload warning coefficient), the multi-functional DO of the AC drive outputs a motor overload warning signal.

F9-07 **Protection against short circuit to ground**

Address:	0xF907	Effective mode:	Real time
Min.:	0	Unit:	-
Max.:	1	Data type:	UInt16
Default mode:	1	Change mode:	At once

Range:
0 to 1

Parameter description
This parameter defines whether to activate short circuit to ground protection upon power-on and during operation.

F9-08 **Braking unit action start voltage**

Address:	0xF908	Effective mode:	Real time
Min.:	310.0	Unit:	V
Max.:	800.0	Data type:	UInt16
Default mode:	378.0	Change mode:	At once

Range:

310.0 to 800.0

Parameter description

This parameter defines the start voltage for brake unit actions to adjust the energy consumption efficiency of the braking resistor. When the motor is in the power generation state, the DC bus voltage of the drive rises. In this case, the braking unit can be used to control the voltage of the DC bus to consume the regenerative energy generated by the motor through the braking resistor or feed back the regenerative energy to the power supply.

Application scenario:

In the V/f control mode, if the actual deceleration time of the motor is far longer than the set deceleration time, the motor decelerates too slowly. To enable the motor to decelerate quickly by enhancing the energy consumption of the braking resistor, you can set F9-08 to 690 V if the following conditions are met: The AC drive is equipped with a braking resistor or an energy feedback unit; The input voltage of the AC drive is 360 V to 420 V.

F9-09 **Number of automatic fault resets**

Address:	0xF909	Effective mode:	Real time
Min.:	0	Unit:	-
Max.:	20	Data type:	UInt16
Default mode:	0	Change mode:	At once

Range:

0 to 20

Parameter description

This parameter defines the number of automatic fault reset times of the AC drive. If the number is exceeded, the AC drive stays in the faulty state.

Note: The undervoltage fault (Err09) is reset automatically when the bus voltage recovers to the normal value, and the number of this fault reset is not counted as the number of automatic fault resets.

F9-10 **Relay action selection upon automatic reset**

Address:	0xF90A	Effective mode:	Real time

Min.:	0	Unit:	-
Max.:	1	Data type:	UInt16
Default mode:	0	Change mode:	At once

Range:

0: Disable

1: Enable

Parameter description

This parameter is used to determine whether the fault output function of the DO takes effect during the automatic fault reset of the AC drive. The fault output function of the DO is defined by setting F5-04 to 2.

F9-11 Time interval between automatic fault reset

Address:	0xF90B	Effective mode:	Real time
Min.:	0.1	Unit:	-
Max.:	100.0	Data type:	UInt16
Default mode:	1.0	Change mode:	At once

Range:

0.1 to 100.0

Parameter description

This parameter defines the duration from the time when the AC drive reports a fault to the time when an automatic fault reset is performed.

F9-13 Output phase loss protection

Address:	0xF90D	Effective mode:	Real time
Min.:	0	Unit:	-
Max.:	1	Data type:	UInt16
Default mode:	1	Change mode:	At once

Range:

0: Disable

1: Enable

Parameter description

This parameter is used to determine whether to perform output phase loss protection. If the ones place of F9-13 is set to 0, the output phase loss will not be reported when it occurs. In this case, the actual current is larger than the current displayed on the operating panel. Use this function cautiously.

F9-14 **Type of the 1st fault**

Address:	0xF90E	Effective mode:	Real time
Min.:	0	Unit:	-
Max.:	99	Data type:	UInt16
Default mode:	0	Change mode:	Unchangeable

Range:

0: No fault
1: Reserved (Err01)
2: Overcurrent during acceleration (Err02)
3: Overcurrent during deceleration (Err03)4: Overcurrent during operation at constant speed (Err04)
5: Overvoltage during acceleration (Err05)
6: Overvoltage during deceleration (Err06)
7: Overvoltage during operation at constant speed (Err07)
8: Pre-charge resistor overload (Err08)
9: Undervoltage (Err09)
10: AC drive overload (Err10)
11: Motor overload (Err11)
12: Input phase loss (Err12)
13: Output phase loss (Err13)
14: Module overtemperature (Err14)
15: External fault (Err15)
16: Communication error (Err16)
17: Reserved (Err17)
18: Current detection error (Err18)
19: Motor parameter auto-tuning error (Err19)
20: Reserved (Err20)
21: Parameter read/write error (Err21)
22: Reserved (Err22)
23: Motor short circuit to ground (Err23)
24: Reserved (Err24)
25: Reserved (Err25)
26: Operating time reached (Err26)
27: User-defined fault 1 (Err27)
28: User-defined fault 2 (Err28)
29: Power-on time reached (Err29)
30: Load loss (Err30)
31: PID feedback loss during running (Err31)
32 to 39: Reserved (Err32 to Err39)
40: Fast current limit timeout (Err40)
41: Reserved (Err41)
42: Excessive speed deviation (Err42)
43 to 53: Reserved (Err43 to Err53)
55: Slave fault in master/slave control (Err55)

Parameter description

This parameter records the fault code of the first fault of the drive. The host controller reads the communication address to obtain the fault code of the AC drive and triggers the AC drive to report the fault.

Note 1: The fault code can be viewed through the operating panel.
Note 2: For the meaning of the fault code, see the troubleshooting section in this product manual.

F9-15 Type of the 2nd fault

Address:	0xF90F	Effective mode:	Real time
Min.:	0	Unit:	-
Max.:	99	Data type:	UInt16
Default mode:	0	Change mode:	Unchangeable:

Range:
Same as F9-15
Parameter description
This parameter records the fault code of the second fault of the drive. The host controller reads the communication address to obtain the fault code of the AC drive and triggers the AC drive to report the fault.
Note 1: The fault code can be viewed through the operating panel.
Note 2: For the meaning of the fault code, see the troubleshooting section in this product manual.

F9-16 Type of the 3rd (latest) fault

Address:	0xF910	Effective mode:	Real time
Min.:	0	Unit:	-
Max.:	99	Data type:	UInt16
Default mode:	0	Change mode:	Unchangeable

Range:
Same as F9-15
Parameter description
This parameter records the fault code of the third (latest) fault of the drive. The host controller reads the communication address to obtain the fault code of the AC drive and triggers the AC drive to report the fault.
Note 1: The fault code can be viewed through the operating panel.
Note 2: For the meaning of the fault code, see the troubleshooting section in this product manual.

F9-17 Frequency upon the latest fault

Address:	0xF911	Effective mode:	Real time
Min.:	0.00	Unit:	Hz

Max.:	655.35	Data type:	UInt16
Default mode:	0.00	Change mode:	Unchangeable

Range:

0.00 to 655.35

Parameter description

This parameter indicates the frequency of the AC drive upon the latest fault.

F9-18 Current upon the latest fault

Address:	0xF912	Effective mode:	Real time
Min.:	0.00	Unit:	A
Max.:	655.35	Data type:	UInt16
Default mode:	0.00	Change mode:	Unchangeable

Range:

0.00 to 655.35

Parameter description

This parameter indicates the current of the AC drive upon the latest fault.

F9-19 Bus voltage upon the latest fault

Address:	0xF913	Effective mode:	Real time
Min.:	0.0	Unit:	V
Max.:	6553.5	Data type:	UInt16
Default mode:	0.0	Change mode:	Unchangeable

Range:

0.0 to 6553.5

Parameter description

This parameter indicates the bus voltage of the AC drive upon the latest fault.

F9-20 Input terminal state upon the latest fault

Address:	0xF914	Effective mode:	Real time
Min.:	0	Unit:	-
Max.:	9999	Data type:	UInt16
Default mode:	0	Change mode:	Unchangeable:

Range:

0 to 9999

Parameter description

This parameter indicates the input terminal state of the AC drive upon the latest fault.

F9-21 **Output terminal state upon the latest fault**

Address:	0xF915	Effective mode:	Real time
Min.:	0	Unit:	-
Max.:	9999	Data type:	UInt16
Default mode:	0	Change mode:	Unchangeable:

Range:

0 to 9999

Parameter description

This parameter indicate the output terminal state of the AC drive upon the latest fault.

F9-22 **AC drive state upon the latest fault**

Address:	0xF916	Effective mode:	Real time
Min.:	0	Unit:	-
Max.:	65535	Data type:	UInt16
Default mode:	0	Change mode:	Unchangeable

Range:

0 to 65535

Parameter description

This parameter indicates the state of the AC drive upon the latest fault.

F9-23 **Power-on time upon the latest fault**

Address:	0xF917	Effective mode:	Real time
Min.:	0	Unit:	min
Max.:	65535	Data type:	UInt16
Default mode:	0	Change mode:	Unchangeable

Range:

0 to 65535

Parameter description

This parameter indicates the power-on duration of the AC drive upon the latest fault.

F9-24 **Running time upon the latest fault**

Address:	0xF918	Effective mode:	Real time
Min.:	0.0	Unit:	min
Max.:	6553.5	Data type:	UInt16

Default mode:	0.0	Change mode:	Unchangeable

Range:

0.0 to 6553.5

Parameter description

This parameter indicates the running time of the AC drive upon the latest fault.

F9-27 **Frequency upon the 2nd fault**

Address:	0xF91B	Effective mode:	Real time
Min.:	0.00	Unit:	Hz
Max.:	655.35	Data type:	UInt16
Default mode:	0.00	Change mode:	Unchangeable

Range:

0.00 to 655.35

Parameter description

This parameter indicates the frequency of the AC drive upon the second fault.

F9-28 **Current upon the 2nd fault**

Address:	0xF91C	Effective mode:	Real time
Min.:	0.00	Unit:	A
Max.:	655.35	Data type:	UInt16
Default mode:	0.00	Change mode:	Unchangeable

Range:

0.00 to 655.35

Parameter description

This parameter indicates the current of the AC drive upon the second fault.

F9-29 **Bus voltage upon the 2nd fault**

Address:	0xF91D	Effective mode:	Real time
Min.:	0.0	Unit:	V
Max.:	6553.5	Data type:	UInt16
Default mode:	0.0	Change mode:	Unchangeable

Range:

0.0 to 6553.5

Parameter description

This parameter indicates the bus voltage of the AC drive upon the second fault.

F9-30 **Input terminal state upon the 2nd fault**

Address:	0xF91E	Effective mode:	Real time
Min.:	0	Unit:	-
Max.:	9999	Data type:	UInt16
Default mode:	0	Change mode:	Unchangeable

Range:

0 to 9999

Parameter description

This parameter indicates the input terminal state of the AC drive upon the second fault.

F9-31 **Output terminal state upon the 2nd fault**

Address:	0xF91F	Effective mode:	Real time
Min.:	0	Unit:	-
Max.:	9999	Data type:	UInt16
Default mode:	0	Change mode:	Unchangeable

Range:

0 to 9999

Parameter description

This parameter indicates the output terminal state of the AC drive upon the second fault.

F9-32 **AC drive state upon the 2nd fault**

Address:	0xF920	Effective mode:	Real time
Min.:	0	Unit:	-
Max.:	65535	Data type:	UInt16
Default mode:	0	Change mode:	Unchangeable:

Range:

0 to 65535

Parameter description

This parameter indicates the state of the AC drive upon the second fault.

F9-33 **Power-on time upon the 2nd fault**

Address:	0xF921	Effective mode:	Real time
Min.:	0	Unit:	min
Max.:	65535	Data type:	UInt16

Default mode:	0	Change mode:	Unchangeable

Range:
0 to 65535

Parameter description
This parameter indicates the power-on duration of the AC drive upon the second fault.

F9-34 Running time upon the 2nd fault

Address:	0xF922	Effective mode:	Real time
Min.:	0	Unit:	min
Max.:	65535	Data type:	UInt16
Default mode:	0	Change mode:	Unchangeable

Range:
0 to 65535

Parameter description
This parameter indicates the running time of the AC drive upon the second fault.

F9-37 Frequency upon the 1st fault

Address:	0xF925	Effective mode:	Real time
Min.:	0.00	Unit:	Hz
Max.:	655.35	Data type:	UInt16
Default mode:	0.00	Change mode:	Unchangeable

Range:
0.00 to 655.35

Parameter description
This parameter indicates the frequency of the AC drive upon the first fault.

F9-38 Current upon the 1st fault

Address:	0xF926	Effective mode:	Real time
Min.:	0.00	Unit:	A
Max.:	655.35	Data type:	UInt16
Default mode:	0.00	Change mode:	Unchangeable

Range:
0.00 to 655.35

Parameter description

This parameter indicates the current of the AC drive upon the first fault.

F9-39 Bus voltage upon the 1st fault

Address:	0xF927	Effective mode:	Real time
Min.:	0.0	Unit:	V
Max.:	6553.5	Data type:	UInt16
Default mode:	0.0	Change mode:	Unchangeable

Range:

0.0 to 6553.5

Parameter description

This parameter indicates the bus voltage of the AC drive upon the first fault.

F9-40 Input terminal state upon the 1st fault

Address:	0xF928	Effective mode:	Real time
Min.:	0	Unit:	-
Max.:	9999	Data type:	UInt16
Default mode:	0	Change mode:	Unchangeable

Range:

0 to 9999

Parameter description

This parameter indicates the input terminal state of the AC drive upon the first fault.

F9-41 Output terminal state upon the 1st fault

Address:	0xF929	Effective mode:	Real time
Min.:	0	Unit:	-
Max.:	9999	Data type:	UInt16
Default mode:	0	Change mode:	Unchangeable

Range:

0 to 9999

Parameter description

This parameter indicates the output terminal state of the AC drive upon the first fault.

F9-42 **AC drive state upon the 1st fault**

Address:	0xF92A	Effective mode:	Real time
Min.:	0	Unit:	-
Max.:	65535	Data type:	UInt16
Default mode:	0	Change mode:	Unchangeable:

Range:

0 to 65535

Parameter description

This parameter indicates the state of the AC drive upon the first fault.

F9-43 **Power-on time upon the 1st fault**

Address:	0xF92B	Effective mode:	Real time
Min.:	0	Unit:	min
Max.:	65535	Data type:	UInt16
Default mode:	0	Change mode:	Unchangeable

Range:

0 to 65535

Parameter description

This parameter indicates the power-on time of the AC drive upon the first fault.

F9-44 **Running time upon the 1st fault**

Address:	0xF92C	Effective mode:	Real time
Min.:	0	Unit:	min
Max.:	65535	Data type:	UInt16
Default mode:	0	Change mode:	Unchangeable

Range:

0 to 65535

Parameter description

This parameter indicates the running time of the AC drive upon the first fault.

F9-47 **Fault protection action selection 1**

Address:	0xF92F	Effective mode:	Real time
Min.:	0	Unit:	-
Max.:	22222	Data type:	UInt16
Default mode:	0	Change mode:	At once

Range:
Ones: Motor overload (Err11)
0: Coast to stop
1: Stop according to the stop mode
2: Continue to run
Tens: Input phase loss (Err12)
0: Coast to stop
1: Stop according to the stop mode
2: Continue to run
Hundreds: Output phase loss (Err13)
0: Coast to stop
1: Stop according to the stop mode
2: Continue to run
Thousands: External fault (Err15)
0: Coast to Stop
1: Stop according to the stop mode
2: Continue to run
Ten thousands: Communication error (Err16)
0: Coast to Stop
1: Stop according to the stop mode
2: Continue to run
Parameter description
The fault protection actions are set by the ones, tens, hundreds, thousands, and ten thousands places of this parameter.
0: Coast to stop
The AC drive coasts to stop.
1: Stop according to the stop mode
The drive stops according to the specified stop mode.
2: Continue to run
The AC drive continues to run.

F9-48 **Fault protection action selection 2**

Address:	0xF930	Effective mode:	Real time
Min.:	0	Unit:	-
Max.:	22210	Data type:	UInt16
Default mode:	0	Change mode:	At once

Range:

Ones: Reserved
0: Coast to stop
Tens: Parameter read/write error (Err21)
0: Coast to stop
1: Stop according to the stop mode
Hundreds: Reserved
0: Coast to stop
1: Stop according to the stop mode
Thousands: Reserved
0: Coast to stop
1: Stop according to the stop mode
2: Continue to run
Ten thousands: Running time reach (Err26)
0: Coast to stop
1: Stop according to the stop mode
2: Continue to run

Parameter description

The fault protection actions are set by the ones, tens, hundreds, thousands, and ten thousands places of this parameter.
0: Coast to stop
The AC drive coasts to stop.
1: Stop according to the stop mode
The drive stops according to the specified stop mode.
2: Continue to run
The AC drive continues to run.

F9-49 **Fault protection action selection 3**

Address:	0xF931	Effective mode:	Real time
Min.:	0	Unit:	-
Max.:	22222	Data type:	UInt16
Default mode:	0	Change mode:	At once

Range:

Ones: User-defined fault 1 (Err27)
0: Coast to stop
1: Stop according to the stop mode
2: Continue to run
Tens: User-defined fault 2 (Err28)
0: Coast to stop
1: Stop according to the stop mode
2: Continue to run
Hundreds: Power-on time reach (Err29)
0: Coast to stop
1: Stop according to the stop mode
2: Continue to run
Thousands: Load loss (Err30)
0: Coast to stop
1: Decelerate to stop
2: Decelerate to 7% of the rated motor frequency and continue to run; resume to the frequency reference if the load recovers
Ten thousands: PID feedback loss during operation (Err31)
0: Coast to stop
1: Stop according to the stop mode
2: Continue to run

Parameter description

The fault protection actions are set by the ones, tens, hundreds, thousands, and ten thousands places of this parameter.
0: Coast to stop
The AC drive coasts to stop.
1: Stop according to the stop mode
The drive stops according to the specified stop mode.
2: Continue to run
The AC drive continues to run.

F9-54 **Frequency for continuing to run upon fault**

Address:	0xF936	Effective mode:	Real time
Min.:	0	Unit:	-
Max.:	4	Data type:	UInt16
Default mode:	0	Change mode:	At once

Range:

0: Current running frequency
1: Frequency reference
2: Frequency upper limit
3: Frequency lower limit
4: Backup frequency upon fault

Parameter description

This parameter is used to select the frequency at which the drive continues operation upon a fault. If a fault occurs during the operation of the AC drive and the fault protection action is set to "Continue to run", the AC drive displays A** and continues to run at the frequency set by F9-54.

F9-55 Backup frequency upon fault

Address:	0xF937	Effective mode:	Real time
Min.:	0.0	Unit:	%
Max.:	100.0	Data type:	UInt16
Default mode:	100.0	Change mode:	At once

Range:

0.0 to 100.0

Parameter description

This parameter defines the backup frequency of the AC drive upon a fault. If a fault occurs during the operation of the AC drive and the fault protection action is set to "Run at the backup frequency" (F9-54 = 4), the AC drive displays A** and continues to run at the backup frequency.

F9-59 Power dip ride-through function

Address:	0xF93B	Effective mode:	Real time
Min.:	0	Unit:	-
Max.:	2	Data type:	UInt16
Default mode:	0	Change mode:	At stop

Range:

0: Disabled
1: Bus voltage constant control
2: Decelerate to stop

Parameter description

The function enables the AC drive to keep running upon an instantaneous power failure. When a power failure occurs, the AC drive makes the motor work in the generating state to keep the bus voltage around the "threshold for enabling power dip ride-through". This function prevents the AC drive from stopping due to input undervoltage.

0: Disable
The power dip ride-through function is disabled.
1: Bus voltage constant control
When power failure occurs, the bus voltage stays at a value around the "threshold for enabling power dip ride-through". In this mode, when the power grid recovers from the failure, the AC drive restores the target output frequency based on the acceleration time.
2: Decelerate to stop
When a power failure occurs, the AC drive decelerates to stop. In this mode, when the power grid recovers from the failure, the AC drive continues decelerating to 0 Hz and stops, and will restart only after receiving a start command.

F9-60 Threshold for recovery from power dip ride-through

Address:	0xF93C	Effective mode:	Real time
Min.:	80	Unit:	%
Max.:	100	Data type:	UInt16
Default mode:	85	Change mode:	At stop

Range:
80 to 100

Parameter description
This parameter defines the voltage threshold for recovery from power dip ride-through. The value 100% corresponds to 540 V. This value is slightly lower than the bus voltage before power failure.
Upon a power failure, the bus voltage is maintained at about F9-62 (threshold for enabling power dip ride-through). When the power supply recovers, the bus voltage rises from F9-62 (threshold for enabling power dip ride-through) to F9-60 (threshold for recovery from power dip ride-through). During this period, the output frequency of the AC drive keeps decreasing until the bus voltage reaches F9-60 (threshold for recovery from power dip ride-through).

F9-61 Duration for judging voltage recovery from power dip ride-through

Address:	0xF93D	Effective mode:	Real time
Min.:	0.0	Unit:	-
Max.:	100.0	Data type:	UInt16
Default mode:	0.5	Change mode:	At stop

Range:
0.0 to 100.0

Parameter description

This parameter is used to set the time required for the bus voltage to rise from F9-60 (threshold for recovery from power dip ride-through) to the voltage before power failure.

F9-62 Threshold for enabling power dip ride-through

Address:	0xF93E	Effective mode:	Real time
Min.:	60	Unit:	%
Max.:	F9-60	Data type:	UInt16
Default mode:	80	Change mode:	At stop

Range:

60 to F9-60

Parameter description

This parameter is used to set the voltage level at which the bus voltage is maintained upon power failure. When a power failure occurs, the bus voltage is retained at a value around F9-62 (Threshold for enabling power dip ride-through).

F9-63 Protection against load loss

Address:	0xF93F	Effective mode:	Real time
Min.:	0	Unit:	-
Max.:	1	Data type:	UInt16
Default mode:	0	Change mode:	At once

Range:

0: Disable

1: Enable

Parameter description

This parameter defines whether to enable the load loss protection function. If load loss protection is enabled, when the output current of the drive falls below the load loss detection level (F9-64) for longer than the time set by F9-65, the drive initiates load loss protection action (which is selected from F9-49 and the default is "Coast to stop").

Once the load recovers during protection, the AC drive will restore to run at the frequency reference.

F9-64 Load loss detection value

Address:	0xF940	Effective mode:	Real time

Min.:	0.0	Unit:	%
Max.:	100.0	Data type:	UInt16
Default mode:	10.0	Change mode:	At once

Range:
0.0 to 100.0

Parameter description
When the output current of the AC drive falls below F9-64 (load loss detection value) for the time longer than the value of F9-65 (load loss detection time), the AC drive performs the load loss protection action (selected through F9-49, coast to stop by default).
Once the load recovers during protection, the AC drive will restore to run at the frequency reference.

F9-65 Load loss detection time

Address:	0xF941	Effective mode:	Real time
Min.:	0.0	Unit:	-
Max.:	60.0	Data type:	UInt16
Default mode:	1.0	Change mode:	At once

Range:
0.0 to 60.0

Parameter description
When the output current of the AC drive falls below F9-64 (load loss detection value) for the time longer than the value of F9-65 (load loss detection time), the AC drive performs the load loss protection action (selected through F9-49, coast to stop by default).
Once the load recovers during protection, the AC drive will restore to run at the frequency reference.

F9-71 Power dip ride-through gain Kp

Address:	0xF947	Effective mode:	Real time
Min.:	0	Unit:	-
Max.:	100	Data type:	UInt16
Default mode:	40	Change mode:	At once

Range:
0 to 100

Parameter description

This parameter is valid only when F9-59 (power dip ride-through function) is set to 1 (bus voltage constant control).
If undervoltage is likely to occur during power dip ride-through, increase the power dip ride-through gain and the power dip ride-through integral coefficient.

F9-72 Integral coefficient Ki of power dip ride-through

Address:	0xF948	Effective mode:	Real time
Min.:	0	Unit:	-
Max.:	100	Data type:	UInt16
Default mode:	30	Change mode:	At once

Range:
0 to 100

Parameter description
This parameter is valid only when F9-59 (power dip ride-through function) is set to 2 (bus voltage constant control).
If undervoltage is likely to occur during power dip ride-through, increase the power dip ride-through gain and the power dip ride-through integral coefficient.

F9-73 Deceleration time of power dip ride-through

Address:	0xF949	Effective mode:	Real time
Min.:	0.0	Unit:	-
Max.:	300.0	Data type:	UInt16
Default mode:	20.0	Change mode:	At stop

Range:
0.0 to 300.0

Parameter description
This parameter is active only when F9-59 (Power dip ride-through function) is set to 2 (Decelerate to stop).
When the bus voltage is below F9-62, the AC drive decelerates to stop. The deceleration time is determined by F9-73 but not F0-18.

F9-74 Restart mode after fault reset

Address:	0xF94A	Effective mode:	Real time
Min.:	0	Unit:	-
Max.:	1	Data type:	UInt16

Default mode:	0	Change mode:	At once

Range:
0 to 1
Parameter description
0: Normal; 1: Flying start

9.10 FA PID Function

FA-00 **PID reference source**

Address:	0xFA00	Effective mode:	Real time
Min.:	0	Unit:	-
Max.:	6	Data type:	UInt16
Default mode:	0	Change mode:	At once

Range:
0: FA-01
1: AI1
2: External operating panel potentiometer
3: Reserved
4: Pulse (DI4 for MD200XXX models and DI/DO for MD200XXX-NC models)
5: Communication
6: Multi-reference
Description
This parameter is used to select the PID reference source. The PID reference source is a relative value. The value 100% corresponds to 100% of the feedback signal of the controlled system.
0: FA-01
The PID reference is set by FA-01 (PID reference).
1: AI1
The PID reference is set by AI1.
2: External operating panel potentiometer
The PID reference is set by external operating panel potentiometer.
3: Reserved
4: Pulse (DI4 for MD200XXX models and DI/DO for MD200XXX-NC models)
The PID reference is set by DI4 (applicable to MD200XXX models) or DI/DO (applicable to MD200XXX-NC models). The frequency is calculated according to the relationship curve between the pulse frequency and the operating frequency.

5: Communication (1000H)
The PID reference is set by remote communication.
6: Multi-reference
The PID reference is set by multi-reference. In this case, different combinations of DI states correspond to different frequency references. The four multi-reference terminals can provide 16 state combinations, corresponding to 16 frequency references. Note: When FA-00 is set to 6 (multi-reference), FC-51 (multi-reference 0 source) cannot be set to 5 (PID reference).

FA-01 PID digital reference

Address:	0xFA01	Effective mode:	Real time
Min.:	0.0	Unit:	%
Max.:	100.0	Data type:	UInt16
Default mode:	50.0	Change mode:	At once

Range:
0.0 to 100.0
Parameter description
When FA-00 (PID reference source) is set to 0, this parameter must be set. When the parameter value is set to 100%, it corresponds to the maximum feedback value.

FA-02 PID feedback source

Address:	0xFA02	Effective mode:	Real time
Min.:	0	Unit:	-
Max.:	8	Data type:	UInt16
Default mode:	0	Change mode:	At once

Range:
0: AI1
1: External operating panel potentiometer
2: Reserved
3:AI1 - External operating panel potentiometer
4: Pulse (DI4 for MD200XXX models and DI/DO for MD200XXX-NC models)
5: Communication
6: AI1 + External operating panel potentiometer
7: Max. (|AI1|, |external operating panel potentiometer|)
8: Min. (|AI1|, |external operating panel potentiometer|)
Parameter description
This parameter defines the PID feedback source.

FA-03 **PID action direction**

Address:	0xFA03	Effective mode:	Real time
Min.:	0	Unit:	-
Max.:	1	Data type:	UInt16
Default mode:	0	Change mode:	At once

Range:

0: Positive

1: Negative

Parameter description

0: Positive

When the feedback signal value is lower than the PID reference signal value, the output frequency of the AC drive rises.

1: Negative

When the feedback signal value is lower than the PID reference signal value, the output frequency of the AC drive declines.

FA-04 **PID reference feedback range**

Address:	0xFA04	Effective mode:	Real time
Min.:	0	Unit:	-
Max.:	65535	Data type:	UInt16
Default mode:	1000	Change mode:	At once

Range:

0 to 65535

Parameter description

This parameter is used for display of the PID reference and feedback, which are dimensionless. For example, if this parameter is set to 1000, the PID reference (0% to 100%) corresponds linearly to the feedback value (0 to 1000).

FA-05 **Proportional gain Kp1**

Address:	0xFA05	Effective mode:	Real time
Min.:	0.0	Unit:	-
Max.:	1000.0	Data type:	UInt16
Default mode:	20.0	Change mode:	At once

Range:

0.0 to 1000.0

Parameter description

This parameter defines the proportional gain Kp in PID control. The deviation reduction speed depends on the proportional coefficient Kp. A larger Kp value indicates faster deviation reduction but higher possibility of oscillation. A smaller Kp value indicates lower possibility of oscillation but slower deviation reduction.

FA-06 **Integral time Ti1**

Address:	0xFA06	Effective mode:	Real time
Min.:	0.01	Unit:	-
Max.:	10.00	Data type:	UInt16
Default mode:	2.00	Change mode:	At once

Range:

0.01 to 10.00

Parameter description

This parameter defines the integral time Ti in PID control. It decides the integral regulating intensity of the PID regulator. Shorter integral time indicates greater adjustment intensity.

FA-07 **Differential time Td1**

Address:	0xFA07	Effective mode:	Real time
Min.:	0.000	Unit:	-
Max.:	10.000	Data type:	UInt16
Default mode:	0.000	Change mode:	At once

Range:

0.000 to 10.000

Parameter description

This parameter defines the differential time Td in PID control. Its value determines the regulation intensity of the PID regulator on the deviation change. The longer the differential time, the greater the regulation intensity.

FA-08 **PID reverse cut-off frequency**

Address:	0xFA08	Effective mode:	Real time
Min.:	0.00	Unit:	Hz
Max.:	F0-10	Data type:	UInt16
Default mode:	0.00	Change mode:	At once

Range:

0.00 to F0-10

Parameter description

When the frequency source is only the PID, the PID reverse cutoff frequency is the minimum value of the current PID output. When the frequency source is main frequency + PID, the setting of FA-08 is valid. The minimum frequency after "main frequency + PID" operation is output.

FA-09 **PID deviation limit**

Address:	0xFA09	Effective mode:	Real time
Min.:	0.0	Unit:	%
Max.:	100.0	Data type:	UInt16
Default mode:	0.0	Change mode:	At once

Range:

0.0 to 100.0

Parameter description

When the deviation is within the PID deviation limit, no adjustment is required. This parameter helps balance the accuracy and stability of the system output.

FA-10 **PID differential limit**

Address:	0xFA0A	Effective mode:	Real time
Min.:	0.00	Unit:	%
Max.:	100.00	Data type:	UInt16
Default mode:	0.10	Change mode:	At once

Range:

0.00 to 100.00

Parameter description

This parameter is used to set the PID differential output range. In PID control, the differential operation is prone to cause system oscillation. Therefore, the PID differential output is restricted to a specific range.

FA-11 **PID reference change time**

Address:	0xFA0B	Effective mode:	Real time
Min.:	0.00	Unit:	-
Max.:	650.00	Data type:	UInt16
Default mode:	0.00	Change mode:	At once

Range:

0.00 to 650.00

Parameter description

This parameter defines the time required for the PID reference to change from 0.0% to 100.0%.

FA-12 PID feedback filter time

Address:	0xFA0C	Effective mode:	Real time
Min.:	0.00	Unit:	-
Max.:	60.00	Data type:	UInt16
Default mode:	0.00	Change mode:	At once

Range:

0.00 to 60.00

Parameter description

If the PID feedback fluctuates greatly, filter the PID feedback. Increase the value of this parameter to improve the PID feedback filter performance. After filtering, the PID feedback fluctuation becomes smooth. The filtering helps to reduce the impact of interference on the feedback. If the filter time is too long, the response performance of the process closed-loop system will be degraded. However, if the filter time is too short, the fluctuation cannot be suppressed. Therefore, it is recommended to increase the filter time gradually until the fluctuation suppression effect is too strong.

FA-13 PID output filter time

Address:	0xFA0D	Effective mode:	Real time
Min.:	0.00	Unit:	-
Max.:	60.00	Data type:	UInt16
Default mode:	0.00	Change mode:	At once

Range:

0.00 to 60.00

Parameter description

If the PID output fluctuates significantly, you need to filter the PID output to smooth the output. If the filter time is too long, the response performance of the process closed-loop system will be degraded. However, if the filter time is too short, the fluctuation cannot be suppressed. Therefore, it is recommended to increase the filter time gradually until the fluctuation suppression effect is too strong.

FA-15 Proportional gain Kp2

Address:	0xFA0F	Effective mode:	Real time

Min.:	0.0	Unit:	-
Max.:	1000.0	Data type:	UInt16
Default mode:	20.0	Change mode:	At once

Range:

0.0 to 1000.0

Parameter description

This parameter defines the proportional gain Kp in PID control. The deviation reduction speed depends on the proportional coefficient Kp. A larger Kp value indicates faster deviation reduction but higher possibility of oscillation. A smaller Kp value indicates lower possibility of oscillation but slower deviation reduction.

FA-16 **Integral time Ti2**

Address:	0xFA10	Effective mode:	Real time
Min.:	0.01	Unit:	-
Max.:	10.00	Data type:	UInt16
Default mode:	2.00	Change mode:	At once

Range:

0.01 to 10.00

Parameter description

This parameter defines the integral time Ti in PID control. It decides the integral regulating intensity of the PID regulator. Shorter integral time indicates greater adjustment intensity.

FA-17 **Differential time Td2**

Address:	0xFA11	Effective mode:	Real time
Min.:	0.000	Unit:	-
Max.:	10.000	Data type:	UInt16
Default mode:	0.000	Change mode:	At once

Range:

0.000 to 10.000

Parameter description

This parameter defines the differential time Td in PID control. Its value determines the regulation intensity of the PID regulator on the deviation change. The longer the differential time, the greater the regulation intensity.

FA-18 **PID parameter switchover condition**

Address:	0xFA12	Effective mode:	Real time
Min.:	0	Unit:	-
Max.:	3	Data type:	UInt16
Default mode:	0	Change mode:	At once

Range:

0: Disable switchover

1: Switchover by DI

2: Automatic switchover based on deviation

3: Automatic switchover based on operating frequency

Parameter description

This parameter is used for switchover between two groups of PID parameters.

0: Disable switchover

No switchover is performed.

1: Switchover by DI

To use this function, assign function 43 (PID parameter switchover) to the DI. If the DI is inactive, parameter group 1 (FA-05 to FA-07) is selected. If the DI is active, parameter group 2 (FA-15 to FA-17) is selected.

2: Automatic switchover based on deviation

If the absolute value of the deviation between the reference and the feedback is smaller than FA-19 (PID parameter switchover deviation 1), parameter group 1 is selected. If the absolute value of the deviation between the reference and the feedback is greater than FA-20 (PID parameter switchover deviation 2), parameter group 2 is selected. If the absolute value of the deviation between the reference and the feedback is between FA-19 (PID parameter switchover deviation 1) and FA-20 (PID parameter switchover deviation 2), the PID parameters are linear interpolation values of the two sets of PID parameters.

3: Automatic switchover based on operating frequency

PID parameters are switched automatically based on the running frequency of the AC drive.

FA-19 **PID parameter switchover deviation 1**

Address:	0xFA13	Effective mode:	Real time
Min.:	0.0	Unit:	%
Max.:	FA-20	Data type:	UInt16
Default mode:	20.0	Change mode:	At once

Range:

0.0 to FA-20

Parameter description

The value 100% corresponds to the maximum deviation between the reference and feedback. The setting range is from 0.0% to FA-20 (PID parameter switchover deviation 2).

FA-20 **PID parameter switchover deviation 2**

Address:	0xFA14	Effective mode:	Real time
Min.:	FA-19	Unit:	%
Max.:	100.0	Data type:	UInt16
Default mode:	80.0	Change mode:	At once

Range:

FA-19 to 100.0

Parameter description

The value 100% corresponds to the maximum deviation between the reference and feedback. The setting range is from FA-19 (PID parameter switchover deviation 1) to 100%.

FA-21 **PID initial value**

Address:	0xFA15	Effective mode:	Real time
Min.:	0.0	Unit:	%
Max.:	100.0	Data type:	UInt16
Default mode:	0.0	Change mode:	At once

Range:

0.0 to 100.0

Parameter description

When the AC drive starts up, the PID starts closed-loop calculation only after the PID output is fixed to the PID initial value (FA-21) and lasts the time longer than or equal to the value of FA-22 (PID initial value active time).

FA-22 **PID initial value active time**

Address:	0xFA16	Effective mode:	Real time
Min.:	0.00	Unit:	-
Max.:	650.00	Data type:	UInt16
Default mode:	0.00	Change mode:	At once

Range:

0.00 to 650.00

Parameter description

When the AC drive starts up, the PID starts closed-loop calculation only after the PID output is fixed to the PID initial value (FA-21) and lasts the time longer than or equal to the value of FA-22 (PID initial value active time).

FA-23 Maximum deviation between two PID outputs

Address:	0xFA17	Effective mode:	Real time
Min.:	0.00	Unit:	%
Max.:	100.00	Data type:	UInt16
Default mode:	1.00	Change mode:	At once

Range:

0.00 to 100.00

Parameter description

-

FA-24 Minimum deviation between two PID outputs

Address:	0xFA18	Effective mode:	Real time
Min.:	0.00	Unit:	%
Max.:	100.00	Data type:	UInt16
Default mode:	1.00	Change mode:	At once

Range:

0.00 to 100.00

Parameter description

-

FA-25 PID integral property

Address:	0xFA19	Effective mode:	Real time
Min.:	0	Unit:	-
Max.:	11	Data type:	UInt16
Default mode:	0	Change mode:	At once

Range:

Ones: Integral separation

0: Inactive

1: Active

Tens: Whether integral operations stop when the output reaches the limit

0: Continue integral operation

1: Stop integral operation

Parameter description

Ones: Integral separation

0: Inactive. When integral separation is inactive, the integral separation remains inactive no matter whether the DI is active.

1: Active. When integral separation is active and the DI allocated with the PID integral pause function is active (F4-00 = 22), the PID integral operation stops. In this case, only proportional and differential operations take effect.

Tens: Whether integral operations stop when the output reaches the limit

0: Continue integral operation

1: Stop integral operation

After the PID operation output reaches the maximum or minimum value, you can choose whether to stop the integral operation. If you choose to stop the PID integral operation, the PID overshoot can be reduced.

FA-26 Detection value of PID feedback loss

Address:	0xFA1A	Effective mode:	Real time
Min.:	0.0	Unit:	%
Max.:	100.0	Data type:	UInt16
Default mode:	0.0	Change mode:	At once

Range:

0.0 to 100.0

Parameter description

This parameter is used to determine whether the PID feedback is lost. When the PID feedback remains lower than the value of FA-26 (detection value of PID feedback loss) for the time longer than or equal to the value of FA-27 (detection time of PID feedback loss), the AC drive reports Err31.

When this parameter is set to 0, PID feedback loss detection is disabled.

FA-27 Detection time of PID feedback loss

Address:	0xFA1B	Effective mode:	Real time
Min.:	0.0	Unit:	-
Max.:	20.0	Data type:	UInt16
Default mode:	0.0	Change mode:	At once

Range:

0.0 to 20.0

Parameter description

This parameter is used to determine whether the PID feedback is lost. When the PID feedback remains lower than the value of FA-26 (detection value of PID feedback loss) for the time longer than or equal to the value of FA-27 (detection time of PID feedback loss), the AC drive reports Err31.

FA-28 **PID operation at stop**

Address:	0xFA1C	Effective mode:	Real time
Min.:	0	Unit:	-
Max.:	1	Data type:	UInt16
Default mode:	0	Change mode:	At once

Range:

0: Disable

1: Enable

Parameter description

This parameter is used to determine whether to continue PID operation when the AC drive stops.

0: Disable

When the motor is not running, PID operation is not performed and the output is cleared.

1: Enable

When the motor is not running, PID operation is still performed and the output changes based on the feedback and reference.

9.11 FB Wobble Frequency, Fixed Length, and Counting Functions

FB-00 **Wobble frequency setting mode**

Address:	0xFB00	Effective mode:	Real time
Min.:	0	Unit:	-
Max.:	1	Data type:	UInt16
Default mode:	0	Change mode:	At once

Range:

0: Relative to the central frequency

1: Relative to the maximum frequency

Parameter description

0: Relative to the center frequency (F0-07, frequency reference superposition). This option applies to variable wobble systems, in which the wobble changes with the center frequency (frequency reference).

1: Relative to the maximum frequency (F0-10). This option applies to fixed wobble systems, in which the wobble is a fixed value calculated based on the maximum frequency.

FB-01 **Wobble frequency amplitude**

Address:	0xFB01	Effective mode:	Real time
Min.:	0.0	Unit:	%
Max.:	100.0	Data type:	UInt16
Default mode:	0.0	Change mode:	At once

Range:

0.0 to 100.0

Parameter description

When FB-01 is set to 0, the wobble frequency function is disabled.

FB-02 **Jump frequency amplitude**

Address:	0xFB02	Effective mode:	Real time
Min.:	0.0	Unit:	%
Max.:	50.0	Data type:	UInt16
Default mode:	0.0	Change mode:	At once

Range:

0.0 to 50.0

Parameter description

This parameter sets the jump frequency amplitude. The wobble running frequency is limited by the frequency upper limit and frequency lower limit.

FB-03 **Wobble frequency cycle**

Address:	0xFB03	Effective mode:	Real time
Min.:	0.1	Unit:	-
Max.:	3000.0	Data type:	UInt16
Default mode:	10.0	Change mode:	At once

Range:

0.1 to 3000.0

Parameter description

This parameter defines the time of a complete wobble cycle.

FB-04 **Triangular wave rise time of wobble frequency**

Address:	0xFB04	Effective mode:	Real time
Min.:	0.1	Unit:	%
Max.:	100.0	Data type:	UInt16
Default mode:	50.0	Change mode:	At once

Range:

0.1 to 100.0

Parameter description

This parameter indicates the percentage of triangular wave rising time to FB-03 (wobble frequency cycle).

FB-05 **Reference length**

Address:	0xFB05	Effective mode:	Real time
Min.:	0	Unit:	(m)
Max.:	65535	Data type:	UInt16
Default mode:	1000	Change mode:	At once

Range:

0 to 65535

Parameter description

This parameter specifies the length to be controlled in the fixed length control mode.

FB-06 **Actual length**

Address:	0xFB06	Effective mode:	Real time
Min.:	0	Unit:	(m)
Max.:	65535	Data type:	UInt16
Default mode:	0	Change mode:	Unchangeable

Range:

0 to 65535

Parameter description

The actual length is a monitored value. Actual length (FB-06) = Number of pulses sampled by terminal/Number of pulses per each meter (FB-07)

FB-07 **Number of pulses per meter**

Address:	0xFB07	Effective mode:	Real time
Min.:	0.1	Unit:	-
Max.:	6553.5	Data type:	UInt16
Default mode:	100.0	Change mode:	At once

Range:

0.1 to 6553.5

Parameter description

This parameter indicates the number of pulses output per one meter. The length pulse is sampled by DI4 or DI/DO, which must be allocated with the length count input function (F4-04 = 27). DI4 is used for MD200XXX models and DI/DO for MD200XXX-NC models.

FB-08 **Set count value**

Address:	0xFB08	Effective mode:	Real time
Min.:	1	Unit:	-
Max.:	65535	Data type:	UInt16
Default mode:	1000	Change mode:	At once

Range:

1 to 65535

Parameter description

When the count value reaches FB-08, the DO outputs an active signal indicating that the set count value has reached.

FB-09 **Designated count value**

Address:	0xFB09	Effective mode:	Real time
Min.:	1	Unit:	-
Max.:	65535	Data type:	UInt16
Default mode:	1000	Change mode:	At once

Range:

1 to 65535

Parameter description

When the count value reaches FB-09, the DO outputs an active signal indicating that the designated count value has reached. FB-09 must be lower than or equal to FB-08 (set count value).

9.12 FC: Multi-Reference and Simple PLC Parameters

FC-00 **Multi-reference 0**

Address:	0xFC00	Effective mode:	Real time
Min.:	-100.0	Unit:	%
Max.:	100.0	Data type:	Int16
Default mode:	0.0	Change mode:	At once

Range:

-100.0 to 100.0

Parameter description

This parameter indicates the frequency reference of each speed. FC-00 to FC-07 correspond to multi-reference 0 to multi-reference 7. The frequency references are calculated as percentages corresponding to the maximum frequency. The value 100% corresponds to F0-10 (Maximum frequency). The drive provides three DI terminals (assigned with functions 12 to 14), which have eight state combinations, corresponding to eight frequency references. The parameters in group FC are applicable to applications where the simple PLC is used as the main frequency. In some industrial applications, the AC motor only needs to support the functions of start/stop, time- and segment-based speed regulation, and simple automatic forward and reverse run. In this case, the simple PLC can be used to provide these functions with a PLC. The simple PLC is generally used in industrial equipment such as mixture mixing and industrial washing machines. When the simple PLC is used as the main frequency source (F0-03=7), set parameters in group FC.

FC-01 **Multi-reference 1**

Address:	0xFC01	Effective mode:	Real time
Min.:	-100.0	Unit:	%
Max.:	100.0	Data type:	Int16
Default mode:	0.0	Change mode:	At once

Range:

-100.0 to 100.0

Parameter description

This parameter indicates the frequency reference of each speed. FC-00 to FC-07 correspond to multi-reference 0 to multi-reference 7. The frequency references are calculated as percentages corresponding to the maximum frequency. The value 100% corresponds to F0-10 (Maximum frequency). The drive provides three DI terminals (assigned with functions 12 to 14), which have eight state combinations, corresponding to eight frequency references. The parameters in group FC are applicable to applications where the simple PLC is used as the main frequency. In some industrial applications, the AC motor only needs to support the functions of start/stop, time- and segment-based speed regulation, and simple automatic forward and reverse run. In this case, the simple PLC can be used to provide these functions with a PLC. The simple PLC is generally used in industrial equipment such as mixture mixing and industrial washing machines. When the simple PLC is used as the main frequency source (F0-03=7), set parameters in group FC.

FC-02 **Multi-reference 2**

Address:	0xFC02	Effective mode:	Real time
Min.:	-100.0	Unit:	%
Max.:	100.0	Data type:	Int16
Default mode:	0.0	Change mode:	At once

Range:

-100.0 to 100.0

Parameter description

This parameter indicates the frequency reference of each speed. FC-00 to FC-07 correspond to multi-reference 0 to multi-reference 7. The frequency references are calculated as percentages corresponding to the maximum frequency. The value 100% corresponds to F0-10 (Maximum frequency). The drive provides three DI terminals (assigned with functions 12 to 14), which have eight state combinations, corresponding to eight frequency references. The parameters in group FC are applicable to applications where the simple PLC is used as the main frequency. In some industrial applications, the AC motor only needs to support the functions of start/stop, time- and segment-based speed regulation, and simple automatic forward and reverse run. In this case, the simple PLC can be used to provide these functions with a PLC. The simple PLC is generally used in industrial equipment such as mixture mixing and industrial washing machines. When the simple PLC is used as the main frequency source (F0-03=7), set parameters in group FC.

FC-03 **Multi-reference 3**

Address:	0xFC03	Effective mode:	Real time

Min.:	-100.0	Unit:	%
Max.:	100.0	Data type:	Int16
Default mode:	0.0	Change mode:	At once

Range:

-100.0 to 100.0

Parameter description

This parameter indicates the frequency reference of each speed. FC-00 to FC-07 correspond to multi-reference 0 to multi-reference 7. The frequency references are calculated as percentages corresponding to the maximum frequency. The value 100% corresponds to F0-10 (Maximum frequency). The drive provides three DI terminals (assigned with functions 12 to 14), which have eight state combinations, corresponding to eight frequency references. The parameters in group FC are applicable to applications where the simple PLC is used as the main frequency. In some industrial applications, the AC motor only needs to support the functions of start/stop, time- and segment-based speed regulation, and simple automatic forward and reverse run. In this case, the simple PLC can be used to provide these functions with a PLC. The simple PLC is generally used in industrial equipment such as mixture mixing and industrial washing machines. When the simple PLC is used as the main frequency source (F0-03=7), set parameters in group FC.

FC-04 **Multi-reference 4**

Address:	0xFC04	Effective mode:	Real time
Min.:	-100.0	Unit:	%
Max.:	100.0	Data type:	Int16
Default mode:	0.0	Change mode:	At once

Range:

-100.0 to 100.0

Parameter description

This parameter indicates the frequency reference of each speed. FC-00 to FC-07 correspond to multi-reference 0 to multi-reference 7. The frequency references are calculated as percentages corresponding to the maximum frequency. The value 100% corresponds to F0-10 (Maximum frequency). The drive provides three DI terminals (assigned with functions 12 to 14), which have eight state combinations, corresponding to eight frequency references. The parameters in group FC are applicable to applications where the simple PLC is used as the main frequency. In some industrial applications, the AC motor only needs to support the functions of start/stop, time- and segment-based speed regulation, and simple automatic forward and reverse run. In this case, the simple PLC can be used to provide these functions with a PLC. The simple PLC is generally used in industrial equipment such as mixture mixing and industrial washing machines. When the simple PLC is used as the main frequency source (F0-03=7), set parameters in group FC.

FC-05 **Multi-reference 5**

Address:	0xFC05	Effective mode:	Real time
Min.:	-100.0	Unit:	%
Max.:	100.0	Data type:	Int16
Default mode:	0.0	Change mode:	At once

Range:

-100.0 to 100.0

Parameter description

This parameter indicates the frequency reference of each speed. FC-00 to FC-07 correspond to multi-reference 0 to multi-reference 7. The frequency references are calculated as percentages corresponding to the maximum frequency. The value 100% corresponds to F0-10 (Maximum frequency). The drive provides three DI terminals (assigned with functions 12 to 14), which have eight state combinations, corresponding to eight frequency references. The parameters in group FC are applicable to applications where the simple PLC is used as the main frequency. In some industrial applications, the AC motor only needs to support the functions of start/stop, time- and segment-based speed regulation, and simple automatic forward and reverse run. In this case, the simple PLC can be used to provide these functions with a PLC. The simple PLC is generally used in industrial equipment such as mixture mixing and industrial washing machines. When the simple PLC is used as the main frequency source (F0-03=7), set parameters in group FC.

FC-06 **Multi-reference 6**

Address:	0xFC06	Effective mode:	Real time

Min.:	-100.0	Unit:	%
Max.:	100.0	Data type:	Int16
Default mode:	0.0	Change mode:	At once

Range:

-100.0 to 100.0

Parameter description

This parameter indicates the frequency reference of each speed. FC-00 to FC-07 correspond to multi-reference 0 to multi-reference 7. The frequency references are calculated as percentages corresponding to the maximum frequency. The value 100% corresponds to F0-10 (Maximum frequency). The drive provides three DI terminals (assigned with functions 12 to 14), which have eight state combinations, corresponding to eight frequency references. The parameters in group FC are applicable to applications where the simple PLC is used as the main frequency. In some industrial applications, the AC motor only needs to support the functions of start/stop, time- and segment-based speed regulation, and simple automatic forward and reverse run. In this case, the simple PLC can be used to provide these functions with a PLC. The simple PLC is generally used in industrial equipment such as mixture mixing and industrial washing machines. When the simple PLC is used as the main frequency source (F0-03=7), set parameters in group FC.

FC-07 **Multi-reference 7**

Address:	0xFC07	Effective mode:	Real time
Min.:	-100.0	Unit:	%
Max.:	100.0	Data type:	Int16
Default mode:	0.0	Change mode:	At once

Range:

-100.0 to 100.0

Parameter description

This parameter indicates the frequency reference of each speed. FC-00 to FC-07 correspond to multi-reference 0 to multi-reference 7. The frequency references are calculated as percentages corresponding to the maximum frequency. The value 100% corresponds to F0-10 (Maximum frequency). The drive provides three DI terminals (assigned with functions 12 to 14), which have eight state combinations, corresponding to eight frequency references. The parameters in group FC are applicable to applications where the simple PLC is used as the main frequency. In some industrial applications, the AC motor only needs to support the functions of start/stop, time- and segment-based speed regulation, and simple automatic forward and reverse run. In this case, the simple PLC can be used to provide these functions with a PLC. The simple PLC is generally used in industrial equipment such as mixture mixing and industrial washing machines. When the simple PLC is used as the main frequency source (F0-03=7), set parameters in group FC.

FC-16 **Simple PLC operation mode**

Address:	0xFC10	Effective mode:	Real time
Min.:	0	Unit:	-
Max.:	2	Data type:	UInt16
Default mode:	0	Change mode:	At once

Range:

0: Stop after operating for one cycle

1: Keep final values after operating for one cycle

2: Cycle operation

Parameter description

When the simple PLC is used as the main frequency source, set the running mode of the simple PLC through FC-16. FC-17 is used to determine whether the running stage and running frequency of the PLC are retained upon power failure or shutdown.

0: Stop after operating for one cycle

The AC drive stops automatically after running for one cycle and starts again only after receiving a running command.

1: Keep final values after operating for one cycle

The AC drive keeps the final running frequency and direction after running for one cycle and starts to run from the initial PLC state upon restart.

2: Cycle operation

The AC drive automatically starts another cycle after running for one cycle and stops only after receiving a stop command.

FC-17 **Simple PLC retention selection upon power failure**

Address:	0xFC11	Effective mode:	Real time
Min.:	0	Unit:	-
Max.:	11	Data type:	UInt16
Default mode:	0	Change mode:	At once

Range:

Ones: Retentive selection upon power failure

0: Non-retentive upon power failure

1: Retentive upon power failure

Tens: Retentive selection upon stop

0: Non-retentive upon stop

1: Retentive upon stop

Parameter description

When the simple PLC is used as the main frequency, set the running mode of the simple PLC through FC-16. FC-17 is used to determine whether the running stage and running frequency of the PLC are retained upon power failure or shutdown.

Ones: Retention selection upon power failure

This parameter defines whether the PLC process starts again upon power-on. When it is set to 1, the AC drive retains the PLC running stage and running frequency upon power failure and continues to run from the retained values after the drive is powered on again.

Tens: Retention selection upon stop

This parameter defines whether the PLC process starts again upon start. When it is set to 1, the AC drive retains the PLC running stage and running frequency upon stop and continues to run from the retained values after the drive is started again.

FC-18 **Operation time of multi-reference 0 set by simple PLC**

Address:	0xFC12	Effective mode:	Real time
Min.:	0.0	Unit:	s (h)
Max.:	6500.0	Data type:	UInt16
Default mode:	0.0	Change mode:	At once

Range:

0.0 to 6500.0

Parameter description

This parameter indicates the operation time of multi-reference 0 set by simple PLC. Operating time of each reference = acceleration or deceleration time + operating time at constant speed and target frequency.

FC-19 **Acceleration/Deceleration time of multi-reference 0 set by PLC**

Address:	0xFC13	Effective mode:	Real time
Min.:	0	Unit:	-
Max.:	1	Data type:	UInt16
Default mode:	0	Change mode:	At once

Range:

0 to 1

Parameter description

This parameter indicates the acceleration/deceleration time of multi-reference 0 set by PLC.

0: Group 1 acceleration/deceleration time (F0-17 and F0-18)

1: Group 2 acceleration/deceleration time (F8-03 and F8-04)

2: Group 3 acceleration/deceleration time (F8-05 and F8-06)

3: Group 4 acceleration/deceleration time (F8-07 and F8-08)

FC-20 **Operation time of multi-reference 1 set by simple PLC**

Address:	0xFC14	Effective mode:	Real time
Min.:	0.0	Unit:	s (h)
Max.:	6500.0	Data type:	UInt16
Default mode:	0.0	Change mode:	At once

Range:

0.0 to 6500.0

Parameter description

This parameter indicates the operation time of multi-reference 1 set by simple PLC. Operating time of each reference = acceleration or deceleration time + operating time at constant speed and target frequency.

FC-21 **Acceleration/Deceleration time of multi-reference 1 set by PLC**

Address:	0xFC15	Effective mode:	Real time
Min.:	0	Unit:	-
Max.:	1	Data type:	UInt16
Default mode:	0	Change mode:	At once

Range:

0 to 1

Parameter description

This parameter indicates the acceleration/deceleration time of multi-reference 1 set by simple PLC.

0: Group 1 acceleration/deceleration time (F0-17 and F0-18)
1: Group 2 acceleration/deceleration time (F8-03 and F8-04)
2: Group 3 acceleration/deceleration time (F8-05 and F8-06)
3: Group 4 acceleration/deceleration time (F8-07 and F8-08)

FC-22 Operation time of multi-reference 2 set by simple PLC

Address:	0xFC16	Effective mode:	Real time
Min.:	0.0	Unit:	s (h)
Max.:	6500.0	Data type:	UInt16
Default mode:	0.0	Change mode:	At once

Range:
0.0 to 6500.0

Parameter description
This parameter indicates the operation time of multi-reference 2 set by simple PLC. Operating time of each reference = acceleration or deceleration time + operating time at constant speed and target frequency.

FC-23 Acceleration/Deceleration time of multi-reference 2 set by PLC

Address:	0xFC17	Effective mode:	Real time
Min.:	0	Unit:	-
Max.:	1	Data type:	UInt16
Default mode:	0	Change mode:	At once

Range:
0 to 1

Parameter description
This parameter indicates the acceleration/deceleration time of multi-reference 2 set by simple PLC
0: Group 1 acceleration/deceleration time (F0-17 and F0-18)
1: Group 2 acceleration/deceleration time (F8-03 and F8-04)
2: Group 3 acceleration/deceleration time (F8-05 and F8-06)
3: Group 4 acceleration/deceleration time (F8-07 and F8-08)

FC-24 Operation time of multi-reference 3 set by simple PLC

Address:	0xFC18	Effective mode:	Real time
Min.:	0.0	Unit:	s (h)
Max.:	6500.0	Data type:	UInt16
Default mode:	0.0	Change mode:	At once

Range:
0.0 to 6500.0
Parameter description
This parameter indicates the operation time of multi-reference 3 set by simple PLC. Operating time of each reference = acceleration or deceleration time + operating time at constant speed and target frequency.

FC-25 **Acceleration/Deceleration time of multi-reference 3 set by PLC**

Address:	0xFC19	Effective mode:	Real time
Min.:	0	Unit:	-
Max.:	1	Data type:	UInt16
Default mode:	0	Change mode:	At once

Range:
0 to 1
Parameter description
This parameter indicates the acceleration/deceleration time of multi-reference 3 set by simple PLC.
0: Group 1 acceleration/deceleration time (F0-17 and F0-18)
1: Group 2 acceleration/deceleration time (F8-03 and F8-04)
2: Group 3 acceleration/deceleration time (F8-05 and F8-06)
3: Group 4 acceleration/deceleration time (F8-07 and F8-08)

FC-26 **Operation time of multi-reference 4 set by simple PLC**

Address:	0xFC1A	Effective mode:	Real time
Min.:	0.0	Unit:	s (h)
Max.:	6500.0	Data type:	UInt16
Default mode:	0.0	Change mode:	At once

Range:
0.0 to 6500.0
Parameter description
This parameter indicates the operation time of multi-reference 4 set by simple PLC. Operating time of each reference = acceleration or deceleration time + operating time at constant speed and target frequency.

FC-27 **Acceleration/Deceleration time of multi-reference 4 set by PLC**

Address:	0xFC1B	Effective mode:	Real time
Min.:	0	Unit:	-
Max.:	1	Data type:	UInt16

Default mode:	0	Change mode:	At once

Range:
0 to 1

Parameter description
This parameter indicates the acceleration/deceleration time of multi-reference 4 set by simple PLC.
0: Group 1 acceleration/deceleration time (F0-17 and F0-18)
1: Group 2 acceleration/deceleration time (F8-03 and F8-04)
2: Group 3 acceleration/deceleration time (F8-05 and F8-06)
3: Group 4 acceleration/deceleration time (F8-07 and F8-08)

FC-28 Operation time of multi-reference 5 set by simple PLC

Address:	0xFC1C	Effective mode:	Real time
Min.:	0.0	Unit:	s (h)
Max.:	6500.0	Data type:	UInt16
Default mode:	0.0	Change mode:	At once

Range:
0.0 to 6500.0

Parameter description
This parameter indicates the operation time of multi-reference 5 set by simple PLC. Operating time of each reference = acceleration or deceleration time + operating time at constant speed and target frequency.

FC-29 Acceleration/Deceleration time of multi-reference 5 set by PLC

Address:	0xFC1D	Effective mode:	Real time
Min.:	0	Unit:	-
Max.:	1	Data type:	UInt16
Default mode:	0	Change mode:	At once

Range:
0 to 1

Parameter description
This parameter indicates the acceleration/deceleration time of multi-reference 5 set by simple PLC.
0: Group 1 acceleration/deceleration time (F0-17 and F0-18)
1: Group 2 acceleration/deceleration time (F8-03 and F8-04)
2: Group 3 acceleration/deceleration time (F8-05 and F8-06)
3: Group 4 acceleration/deceleration time (F8-07 and F8-08)

FC-30 **Operation time of multi-reference 6 set by simple PLC**

Address:	0xFC1E	Effective mode:	Real time
Min.:	0.0	Unit:	s (h)
Max.:	6500.0	Data type:	UInt16
Default mode:	0.0	Change mode:	At once

Range:

0.0 to 6500.0

Parameter description

This parameter indicates the operation time of multi-reference 6 set by simple PLC. Operating time of each reference = acceleration or deceleration time + operating time at constant speed and target frequency.

FC-31 **Acceleration/Deceleration time of multi-reference 6 set by PLC**

Address:	0xFC1F	Effective mode:	Real time
Min.:	0	Unit:	-
Max.:	1	Data type:	UInt16
Default mode:	0	Change mode:	At once

Range:

0 to 1

Parameter description

This parameter indicates the acceleration/deceleration time of multi-reference 6 set by simple PLC.

0: Group 1 acceleration/deceleration time (F0-17 and F0-18)

1: Group 2 acceleration/deceleration time (F8-03 and F8-04)

2: Group 3 acceleration/deceleration time (F8-05 and F8-06)

3: Group 4 acceleration/deceleration time (F8-07 and F8-08)

FC-32 **Operation time of multi-reference 7 set by simple PLC**

Address:	0xFC20	Effective mode:	Real time
Min.:	0.0	Unit:	s (h)
Max.:	6500.0	Data type:	UInt16
Default mode:	0.0	Change mode:	At once

Range:

0.0 to 6500.0

Parameter description

This parameter indicates the operation time of multi-reference 7 set by simple PLC. Operating time of each reference = acceleration or deceleration time + operating time at constant speed and target frequency.

FC-33 **Acceleration/Deceleration time of multi-reference 7 set by PLC**

Address:	0xFC21	Effective mode:	Real time
Min.:	0	Unit:	-
Max.:	1	Data type:	UInt16
Default mode:	0	Change mode:	At once

Range:

0 to 1

Parameter description

This parameter indicates the acceleration/deceleration time of multi-reference 7 set by simple PLC.

0: Group 1 acceleration/deceleration time (F0-17 and F0-18)

1: Group 2 acceleration/deceleration time (F8-03 and F8-04)

2: Group 3 acceleration/deceleration time (F8-05 and F8-06)

3: Group 4 acceleration/deceleration time (F8-07 and F8-08)

FC-50 **PLC operating time unit**

Address:	0xFC32	Effective mode:	Real time
Min.:	0	Unit:	-
Max.:	1	Data type:	UInt16
Default mode:	0	Change mode:	At once

Range:

0: Second (s)

1: Hour (h)

Parameter description

This parameter defines the unit of the running time for each PLC speed.

FC-51 **Multi-reference 0 setting mode**

Address:	0xFC33	Effective mode:	Real time
Min.:	0	Unit:	-
Max.:	6	Data type:	UInt16
Default mode:	0	Change mode:	At once

Range:

0: FC-00
1: AI1
2: External operating panel potentiometer
3: Reserved
4: Pulse (DI4 for MD200XXX models and DI/DO for MD200XXX-NC models)
5: PID
6: Preset frequency (F0-08)

Parameter description

Multi-reference 0 can be set through seven ways, including digital setting, analog input, pulse frequency, PID, and preset frequency.

0: FC-00
The frequency of multi-reference 0 is set by FC-00.
1: AI1
The frequency of multi-reference 0 is set by AI1.
2: External operating panel potentiometer
The frequency of multi-reference 0 is set by external operating panel potentiometer.
3: Reserved
4: Pulse (DI4 for MD200XXX models and DI/DO for MD200XXX-NC models)
The frequency of multi-reference 0 is set by pulse frequency.
5: PID
The frequency of multi-reference 0 is set by PID.
6: Preset frequency (F0-08)
The frequency of multi-reference 0 is set by F0-08 (preset frequency).

9.13 FD Communication Parameters

FD-00 **Baud rate**

Address:	0xFD00	Effective mode:	Real time
Min.:	0	Unit:	-
Max.:	5009	Data type:	Int16
Default mode:	5005	Change mode:	At once

Range:

Ones: Modbus
0: 300 bps
1: 600 bps
2: 1200 bps
3: 2400 bps
4: 4800 bps
5: 9600 bps
6: 19200 bps
7: 38400 bps
8: 57600 bps
9: 115200 bps
Tens: Reserved
Hundreds: Reserved
Thousands: CANlink baud rate
0: 20 kbps
1: 50 kbps
2: 100 kbps
3: 125 kbps
4: 250 kbps
5: 500 kbps

Parameter description

This parameter defines the speed of data transmitted between the host controller and the AC drive. The higher the baud rate, the quicker the communication speed.

Note that the baud rate of the host controller must be the same as that of the AC drive. Otherwise, communication fails.

FD-01 **Modbus data format**

Address:	0xFD01	Effective mode:	Real time
Min.:	0	Unit:	-
Max.:	3	Data type:	UInt16
Default mode:	0	Change mode:	At once

Range:

0: No check (8-N-2)
1: Even parity check (8-E-1)
2: Odd parity check (8-O-1)
3: No check (8-N-1)

Parameter description

This parameter defines the format of Modbus data transmitted between the host controller and the AC drive. Note that the data format of the host controller must be the same as that of the AC drive. Otherwise, communication fails.

FD-02 **Local address**

Address:	0xFD02	Effective mode:	Real time
Min.:	0	Unit:	-
Max.:	247	Data type:	UInt16
Default mode:	1	Change mode:	At once

Range:

0 to 247

Parameter description

When the local address is set to 0 (broadcast address), the host controller broadcast is enabled.

The local address must be unique in the range of 1 to 247, which is the basis for point-point communication between the AC drive and the host controller.

FD-03 **Modbus response delay**

Address:	0xFD03	Effective mode:	Real time
Min.:	0	Unit:	ms
Max.:	20	Data type:	UInt16
Default mode:	2	Change mode:	At once

Range:

0 to 20

Parameter description

This parameter defines the interval from the end of data receiving by the AC drive to the start of data transmission to the host controller.

If the response delay is shorter than the system processing time, the system processing time prevails. This means that the system processes data and then sends the data to the host controller. If the response delay is longer than the system processing time, the system processes data and waits for the response delay time. After the time elapses, the system sends the data to the host controller.

FD-04 **Communication timeout time**

Address:	0xFD04	Effective mode:	Real time

Min.:	0.0	Unit:	-
Max.:	60.0	Data type:	UInt16
Default mode:	0.0	Change mode:	At once

Range:

0.0 to 60.0

Parameter description

When it is set to 0.0s, the Modbus communication timeout time is invalid. Generally, set this parameter to 0.0s. This parameter is used to monitor communication status in a system with continuous communication.

When it is set to an effective value, and the time interval between the current communication and the next communication exceeds FD-04 (Communication timeout time), the system reports a communication fault (Err16).

FD-05 Data transmission protocol

Address:	0xFD05	Effective mode:	Real time
Min.:	0	Unit:	-
Max.:	1	Data type:	UInt16
Default mode:	1	Change mode:	At once

Range:

0: Non-standard Modbus protocol

1: Standard Modbus protocol

Parameter description

0: Non-standard Modbus protocol

The number of bytes returned by the slave is one byte more than the byte stipulated in the standard Modbus protocol. Other read/write operations are the same as those stipulated in the standard Modbus protocol.

1: Standard Modbus protocol

Only word-type parameters can be read and written. The reading command is 0x03 and writing command is 0x06. Reading and writing of bytes or bits are not supported.

FD-06 Current resolution read through communication

Address:	0xFD06	Effective mode:	Real time
Min.:	0	Unit:	-
Max.:	1	Data type:	UInt16
Default mode:	0	Change mode:	At once

Range:

0: 0.01 A (active when the power is lower than or equal to 55 kW)
1: 0.1 A (active when the power is higher than 55 kW)

Parameter description

This parameter determines the output unit of the current when the output current is read through communication.

FD-07 **Software selection**

Address:	0xFD07	Effective mode:	Real time
Min.:	0	Unit:	-
Max.:	1	Data type:	UInt16
Default mode:	0	Change mode:	At once

Range:

0: RS485
1: Software

Parameter description

This parameter is used to select whether RS485 or software is enabled. RS485 and software cannot be enabled at the same time.

9.14 FP Parameter Management

FP-00 **User password**

Address:	0x1F00	Effective mode:	Real time
Min.:	0	Unit:	-
Max.:	65535	Data type:	UInt16
Default mode:	0	Change mode:	At once

Range:

0 to 65535

Parameter description

This parameter indicates the user password.

FP-01 **Parameter initialization**

Address:	0x1F01	Effective mode:	Real time
Min.:	0	Unit:	-
Max.:	501	Data type:	UInt16
Default mode:	0	Change mode:	At stop

Range:

0: No operation
1: Restore to default settings (excluding motor parameters)
2: Clear records
4: Back up current user parameters
501: Restore user backup parameters

Parameter description

This parameter sets the action upon parameter initialization of the AC drive.
0: No operation
The AC drive does not perform any operation.
1: Restore to default settings (excluding motor parameters)
Most of the AC drive parameters are restored to default settings. However, motor parameters, fault records, F7-09 (cumulative running time), F7-13 (cumulative power-on time), F7-14 (cumulative power consumption), and F7-07 (inverter heatsink temperature) are not restored.
2: Clear records
The fault records, F7-09 (cumulative running time), F7-13 (cumulative power-on time), and F7-14 (cumulative power consumption) are cleared.

4: Back up current user parameters
The current parameter settings are backed up.
501: Restore user backup parameters
Parameters backed up by setting FP-01 to 4 are restored.

FP-02 **Parameter group display**

Address:	0x1F02	Effective mode:	Real time
Min.:	0	Unit:	-
Max.:	11	Data type:	UInt16
Default mode:	11	Change mode:	At once

Range:

Ones: Parameter group U display
0: Not displayed
1: Displayed
Tens: Parameter group A display
0: Not displayed
1: Displayed

Parameter description

This parameter is used to determine whether parameters in groups U and A are displayed on the operating panel.

FP-03 **Customized parameter group display**

Address:	0x1F03	Effective mode:	Real time
Min.:	0	Unit:	-
Max.:	11	Data type:	UInt16
Default mode:	11	Change mode:	At once

Range:

Ones: Display of user-defined parameter group

0: Not displayed

1: Displayed

Tens: Display of user-modified parameter group

0: Not displayed

1: Displayed

Parameter description

The ones place or tens place of the parameter is used to determine whether the user-defined parameter group or the user-modified parameter group is displayed on the operating panel.

FP-04 **Parameter modification**

Address:	0x1F04	Effective mode:	Real time
Min.:	0	Unit:	-
Max.:	1	Data type:	UInt16
Default mode:	0	Change mode:	At once

Range:

0: Modification allowed

1: Modification prohibited

Parameter description

This parameter sets whether the parameter can be modified.

9.15 A1 Virtual DI/DO

A1-07 **Function selection for AI1 used as DI**

Address:	0xA107	Effective mode:	Real time
Min.:	0	Unit:	-
Max.:	52	Data type:	UInt16
Default mode:	0	Change mode:	At stop

Range:

0: No function
1: Forward run (FWD)
2: Reverse run (REV)
3: Three-wire operation control
4: Forward jog (FJOG)
5: Reverse jog (RJOG)
6: Function as the UP key
7: Function as the DOWN key
8: Coast to stop
9: Fault reset (RESET)
10: Operation pause
11: External fault NO input
12: Multi-reference terminal 1
13: Multi-reference terminal 2
14: Multi-reference terminal 3
15: Multi-reference terminal 4
16: Acceleration/Deceleration time selection terminal 1
17: Reserved
18: Frequency reference switchover
19: Clear information set by UP/DOWN keys on the operating panel or by terminals functioning as the UP/DOWN keys
20: Control command switchover terminal 1
21: Acceleration/Deceleration inhibited
22: PID pause
23: Simple PLC state reset
24: Wobble frequency pause
25: Counter input
26: Counter reset
27: Length counting input
28: Length reset
29: Reserved
30: Pulse frequency input (DI4 for MD200XXX models and DI/DO for MD200XXX-NC models)
31: Reserved
32: Immediate DC braking
33: External fault NC input
34: Frequency modification enable
35: PID action direction reversal

36: External stop terminal 1
37: Control command switchover terminal 2
38: PID integral pause
39: Switch main frequency source to preset frequency
40: Switch auxiliary frequency source to preset frequency
41: Reserved
42: Reserved
43: PID parameter switchover
44: User-defined fault 1
45: User-defined fault 2
46: Reserved
47: Emergency stop
48: External stop terminal 2
49: Deceleration DC braking
50: Clear the current running time
51: Two-wire/Three-wire mode switchover
52: Reverse frequency inhibited

Parameter description

0: No function

The DI has no function.

1: Forward run (FWD)

The AC drive runs in the forward direction. FWD indicates forward running. In two-wire mode 1 (F4-11 = 0), activating terminal function 1 triggers forward running. In two-wire mode 2 (F4-11 = 1), activating terminal function 1 triggers a running command.

2: Reverse run (REV)

The AC drive runs in the reverse direction. REV indicates reverse run. In three-wire mode 1 (F4-11 = 2), activating the terminal sets the AC drive to reversely run. In three-wire mode 2 (F4-11 = 3), activating the terminal sets the forward/reverse run direction.

3: Three-wire operation control

The AC drive operation mode is three-wire control mode. To set the running command through the terminal, set F4-11 (Terminal control mode) to 2 (Three-wire mode 1) or 3 (Three-wire mode 2), and set the terminal function to 3. The three-wire control modes include three-wire mode 1 and three-wire mode 2.

4: Forward jog (FJOG)

The operating mode of the AC drive is forward jog. In the jogging mode, the drive runs at the frequency set by F8-00 (Jogging frequency), which is generally used for maintenance and commissioning of the equipment on site.

5: Reverse jog (RJOG)

The operation mode of the AC drive is reverse jog.

6: Function as the UP key
The terminal is used to increase the frequency. When this terminal is active, it works as if the increment key is pressed and held. When this terminal is inactive, it works as if the increment key is released.
7: Function as the DOWN key
The terminal is used to decrease the frequency When this terminal is active, it works as if the decrement key is pressed and held. When this terminal is inactive, it works as if the decrement key is released.
8: Coast to stop
Once the drive receives a stop command, it immediately stops output and the load then coasts to stop based on the mechanical inertia. The AC drive stops output to shut down. At this time, the power supply of the motor is cut off and the driving system is in the free braking state. Since the stop time is determined by the inertia of the drive system, coast to stop is also called inertia stop.
9: Fault reset (RESET). Activating the terminal resets the AC drive upon a fault. This function is the same as that of the STOP/RES key on the operating panel. This function allows you to perform a reset upon the fault remotely.
10: Operation pause
The AC drive decelerates to stop with all running parameters retained (such as PLC, wobble frequency, and PID parameters). When the terminal is inactive, the AC drive resumes its running status before stop.
11: External fault NO input
The AC drive reports Err15 upon receiving an external signal.
12-15: Multi-reference terminals 1-4
The AC drive selects the multi-reference as the main frequency. Sixteen speeds or sixteen references can be set through combinations of sixteen states of these four terminals. This function is applicable to scenarios where continuous adjustment of the AC drive running frequency is not required and only several frequency values are required.
16: Acceleration/Deceleration time selection terminals 1
The acceleration time indicates the time required by the AC drive to accelerate from 0 Hz to the base frequency for acceleration/deceleration time (F0-25). The deceleration time indicates the time required by the AC drive to decelerate from the base frequency for acceleration/deceleration time (F0-25) to 0 Hz.
17: Reserved
18: Frequency source switchover
This function is used to switch among different frequency reference input modes. The frequency reference is set by F0-07 (Frequency superposition selection).

19: Clear information set by UP/DOWN keys on the operating panel or by terminals functioning as the UP/DOWN keys
Activating the terminal clears the frequency that is set by the increment or decrement key on the operating panel or the terminal functioning as UP/DOWN keys and resumes the frequency reference to the value specified by F0-08.
20: Control command switchover terminal 1
When the running command is set through the terminal (F0-02=1) and the terminal is active, the control command source is switched from terminal control to operating panel control.
When the running command is set through communication (F0-02=2) and the terminal is active, the control command source is switched from communication control to operating panel control.
21: Acceleration/Deceleration inhibited
The terminal is used to maintain the current running frequency of the AC drive regardless of changes of the external input frequency (unless a stop command is received).
22: PID pause
PID is invalid temporarily. The AC drive maintains the current output frequency without supporting PID adjustment of frequency source.
23: Simple PLC state reset
The terminal is used to restore the AC drive to the initial state of the simple PLC.
24: Wobble frequency pause
In the wobble frequency process, when the terminal is active, the wobble frequency function pauses (the AC drive outputs at the center frequency).
25: Counter input
In the count process, when the terminal is active, a count pulse is input.
26: Counter reset
In the count process, when the terminal is active, the counter status is cleared.
27: Length counting input
In the fixed length process, when the terminal is active, the length count is input.
28: Length reset
In the fixed length process, when the terminal is active, the length is cleared.
29: Reserved
30: Pulse frequency input
When DI5 is used as the pulse input terminal, DI5 must be allocated with this function.

31: Reserved
32: Immediate DC braking
The AC drive directly switches to the DC braking state. DC braking indicates that the drive outputs direct current to the stator winding of the asynchronous motor to form a static magnetic field, enabling the motor to brake with energy consumption. In this state, the rotor cuts the static magnetic field to generate braking torque, which stops the motor quickly.
33: NC input of external fault
The AC drive reports Err15 upon receiving an external signal.
34: Frequency modification enable
When the terminal is active, the frequency can be modified. When the terminal is inactive, the frequency cannot be modified.
35: PID action direction reversal
The PID action direction is reversed to the direction set by FA-03 (PID action direction).
36: External stop terminal 1
When the running command is set through the operating panel (F0-02 = 0), this terminal is used to stop the AC drive, which functions in the same way as the STOP/RES key on the operating panel.
37: Control command switchover terminal 2
The terminal is used for switchover between terminal control and communication control.
If the command source is set to terminal control, activating the terminal switches the AC drive to communication control.
If the command source is set to communication control, activating the terminal switches the AC drive to terminal control.
38: PID integral pause
When the terminal is active, the integral adjustment function of the PID pauses. However, the proportional and derivative adjustment functions are still valid.
39: Switch main frequency source to preset frequency
This function is used to switch the main frequency source to F0-08 (preset frequency).
40: Switch auxiliary frequency source to preset frequency
This function is used to switch the auxiliary frequency source to F0-08 (preset frequency).

41: Reserved
42: Reserved
43: PID parameter switchover
If PID parameters are switched over through DI (FA-18 = 1), the PID parameter values vary with the terminal state. When the terminal is inactive, PID parameters are FA-05 to FA-07 (proportional gain Kp1, integral time Ti1, and differential time Td1). When the terminal is active, PID parameters are FA-15 to FA-17 (proportional gain Kp2, integral time Ti2, and differential time Td2).
44: User-defined fault 1
When the AC drive reports Err27, the AC drive performs operations according to the value of F9-49 (Fault protection action selection).
45: User-defined fault 2
When the AC drive reports Err28, the AC drive performs operations according to the value of F9-49 (Fault protection action selection).
46: Reserved
47: Emergency stop
When the system is in the emergency state, the AC drive decelerates according to F8-55 (Deceleration time for emergency stop). When the deceleration time for emergency stop is 0s in V/f mode, the AC drive decelerates according to the minimum unit time. The input terminal does not need to be in the closed state continuously. Even if it is closed only for a moment, an emergency stop will occur immediately. Different from general deceleration time, the emergency stop input terminal is opened after the deceleration time for emergency stop expires. In this case, if the operation signal is still active, the drive will not restart. To restart the drive, disconnect the operation terminal and input the operation command again.
48: External stop terminal 2
The terminal is used to make the AC drive decelerate to stop in any control mode (operating panel, terminal, or communication control). In this mode, the deceleration time is fixed to deceleration time 4 (F8-08).
49: Deceleration DC braking
The AC drive decelerates to F6-11 (Start frequency of DC braking for stop) and then enters the DC braking state.
50: Clear the current running time
The terminal is used to clear the current running time of the AC drive. If the current running time is less than the value (greater than 0) of F8-53 (Present running time reach settings), the current running timing is cleared when the terminal is active. If the current running time is greater than the value (greater than 0) of F8-53, the current running time is not cleared when the terminal is active.
51: Two-wire/Three-wire mode switchover
The terminal is used to switch between the two-wire control mode and the three-wire control mode.

When F4-11 is set to 0 (Two-wire mode 1) and the terminal is active, the AC drive switches to three-wire mode 1. When the terminal is inactive, two-wire mode 1 is used.
When F4-11 is set to 1 (Two-wire mode 2) and the terminal is active, the AC drive switches to three-wire mode 2. When the terminal is inactive, two-wire mode 2 is used.
When F4-11 is set to 2 (Three-wire mode 1) and the terminal is active, the AC drive switches to two-wire mode 1. When the terminal is inactive, three-wire control mode 1 is used.
When F4-11 is set to 3 (Three-wire mode 2) and the terminal is active, the AC drive switches to two-wire mode 2. When the terminal is inactive, three-wire control mode 2 is used.
52: Reverse frequency inhibited
When the terminal is active, even if the reverse frequency is set, the actual frequency of the AC drive is fixed to 0.
It functions the same as F8-13 (Reverse running prohibition).

A1-10 **Active mode for AI used as DI**

Address:	0xA10A	Effective mode:	Real time
Min.:	0	Unit:	-
Max.:	1	Data type:	UInt16
Default mode:	0	Change mode:	At stop

Range:
0: Active high
1: Active low
Parameter description
0: Active high
The AI is active when the corresponding place of A1-10 is set to 0 and inactive when set to 1.
1: Active low
The AI is inactive when the corresponding place of A1-10 is set to 0 and active when set to 1.

9.16 A5 Control Optimization Parameters

A5-00 **Frequency upper limit for DPWM switchover**

Address:	0xA500	Effective mode:	Real time
Min.:	0.00	Unit:	Hz
Max.:	F0-10	Data type:	UInt16

Default mode:	12.00	Change mode:	At once

Range:
0.00 to F0-10

Parameter description
The AC drive supports two PWM wave modulation modes, including CPWM and DPWM. When the running frequency is higher than the value of A5-00, the DPWM mode is used. When the running frequency is lower than the value of A5-00, the CPWM mode is used. The DPWM mode can improve the drive efficiency, and the CPWM mode can reduce the motor noise.
Increasing this parameter to the maximum frequency will reduce the motor noise.

A5-02 **Dead zone compensation mode**

Address:	0xA502	Effective mode:	Real time
Min.:	0	Unit:	-
Max.:	1	Data type:	UInt16
Default mode:	1	Change mode:	At once

Range:
0: No compensation
1: Compensation mode 1

Parameter description
A dead zone must be reserved for the switch signals of the upper and lower switch transistors on the same bridge arm of the AC drive. Dead zone compensation can improve the current waveform when the motor runs at low frequencies.

A5-03 **Random PWM depth**

Address:	0xA503	Effective mode:	Real time
Min.:	0	Unit:	-
Max.:	10	Data type:	UInt16
Default mode:	3	Change mode:	At once

Range:
0 to 10

Parameter description

If the motor noise is loud, setting A5-03 to a non-zero value can reduce the motor noise. The higher the value, the better the effect of noise reduction. However, if the value is too high, the motor may be out of control. Therefore, set this parameter to 1 during commissioning and then increase by 1 each time based on the field application.

A5-04 **Pulse-by-pulse current limit**

Address:	0xA504	Effective mode:	Real time
Min.:	0	Unit:	-
Max.:	1	Data type:	UInt16
Default mode:	1	Change mode:	At once

Range:

0: Disable

1: Enable

Parameter description

This parameter is used to minimize the possibility of overcurrent faults, ensuring normal operation of the AC drive.

It is recommended to disable this function in hoisting applications, such as cranes.

A5-05 **Overmodulation coefficient**

Address:	0xA505	Effective mode:	Real time
Min.:	100	Unit:	%
Max.:	110	Data type:	UInt16
Default mode:	103	Change mode:	At stop

Range:

100 to 110

Parameter description

This parameter defines the maximum output voltage coefficient in percentages, indicating the boost capacity of the maximum voltage output of the drive.

Increasing A5-05 will improve the maximum loading capacity in the motor field-weakening range, but will increase motor current ripple and heat.

Decreasing A5-05 will weaken the maximum loading capacity in the motor field-weakening range, but will reduce motor current ripple and heat.

Generally, this parameter needs no modification.

A5-06 **Undervoltage threshold**

Address:	0xA506	Effective mode:	Real time
Min.:	140.0	Unit:	V
Max.:	420.0	Data type:	UInt16
Default mode:	170.0	Change mode:	At once

Range:

140.0 to 420.0

Parameter description

When the bus voltage is lower than the value set by A5-06, the AC drive reports Err09.

A5-09 **Overvoltage threshold**

Address:	0xA509	Effective mode:	Real time
Min.:	300.0	Unit:	V
Max.:	820.0	Data type:	UInt16
Default mode:	410.0	Change mode:	At stop

Range:

300.0 to 820.0

Parameter description

When the bus voltage exceeds the value of A5-09, the AC drive generates an overvoltage alarm (Err05 to Err07).

9.17 A6 AI Curve Setting

A6-24 **AI1 jump point**

Address:	0xA618	Effective mode:	Real time
Min.:	-100.0	Unit:	%
Max.:	100.0	Data type:	Int16
Default mode:	0.0	Change mode:	At once

Range:

-100.0 to 100.0

Parameter description

This parameter is used to set the AI1 jump point. If the input value is within the range defined by A6-25, the value of the jump point will be output.

A6-25 AI1 jump amplitude

Address:	0xA619	Effective mode:	Real time
Min.:	0.0	Unit:	%
Max.:	100.0	Data type:	UInt16
Default mode:	0.5	Change mode:	At once

Range:

0.0 to 100.0

Parameter description

This parameter is used to set the AI1 jump amplitude. If the input is within the range defined by A6-25, the value of the jump point will be output.

A6-26 Jump point of external operating panel potentiometer

Address:	0xA61A	Effective mode:	Real time
Min.:	-100.0	Unit:	%
Max.:	100.0	Data type:	Int16
Default mode:	0.0	Change mode:	At once

Range:

-100.0 to 100.0

Parameter description

This parameter indicates the jump point set by external operating panel potentiometer If the input value is within the range defined by A6-27, the value of the jump point will be output.

A6-27 Jump amplitude of external operating panel potentiometer

Address:	0xA61B	Effective mode:	Real time
Min.:	0.0	Unit:	%
Max.:	100.0	Data type:	UInt16
Default mode:	0.5	Change mode:	At once

Range:

0.0 to 100.0

Parameter description

This parameter indicates the jump amplitude set by external operating panel potentiometer If the input is within the range defined by A6-27, the value of the jump point will be outputted.

9.18 AC AI/AO Correction

AC-00 **Measured voltage 1 of AI1**

Address:	0xAC00	Effective mode:	Real time
Min.:	-10.000	Unit:	V
Max.:	10.000	Data type:	Int16
Default mode:	2.000	Change mode:	At once

Range:
-10.000 to 10.000

Parameter description
When analog voltage correction is conducted on AI1, a correction curve is obtained based on two points, which correspond to a measured voltage and a displayed voltage. The measured voltage is the voltage measured using a meter, and the displayed voltage is the AI1 voltage before correction (U0-21).

AC-01 **Displayed voltage 1 of AI1**

Address:	0xAC01	Effective mode:	Real time
Min.:	-10.000	Unit:	V
Max.:	10.000	Data type:	Int16
Default mode:	2.000	Change mode:	At once

Range:
-10.000 to 10.000

Parameter description
When analog voltage correction is conducted on AI1, a correction curve is obtained based on two points, which correspond to a measured voltage and a displayed voltage. The measured voltage is the voltage measured using a meter, and the displayed voltage is the AI1 voltage before correction (U0-21).

AC-02 **Measured voltage 2 of AI1**

Address:	0xAC02	Effective mode:	Real time
Min.:	-10.000	Unit:	V
Max.:	10.000	Data type:	Int16
Default mode:	8.000	Change mode:	At once

Range:
-10.000 to 10.000

Parameter description

When analog voltage correction is conducted on AI1, a correction curve is obtained based on two points, which correspond to a measured voltage and a displayed voltage. The measured voltage is the voltage measured using a meter, and the displayed voltage is the AI1 voltage before correction (U0-21).

AC-03 **Displayed voltage 2 of AI1**

Address:	0xAC03	Effective mode:	Real time
Min.:	-10.000	Unit:	V
Max.:	10.000	Data type:	Int16
Default mode:	8.000	Change mode:	At once

Range:

-10.000 to 10.000

Parameter description

When analog voltage correction is conducted on AI1, a correction curve is obtained based on two points, which correspond to a measured voltage and a displayed voltage. The measured voltage is the voltage measured using a meter, and the displayed voltage is the AI1 voltage before correction (U0-21).

AC-12 **Target voltage 1 of AO1**

Address:	0xAC0C	Effective mode:	Real time
Min.:	-10.000	Unit:	V
Max.:	10.000	Data type:	Int16
Default mode:	2.000	Change mode:	At once

Range:

-10.000 to 10.000

Parameter description

When analog voltage correction is performed on AO1, a correction curve is formed through two points, corresponding to a target voltage and a measured voltage. The target voltage is the expected output voltage, and the measured voltage is the output voltage measured.

AC-13 **Measured voltage 1 of AO1**

Address:	0xAC0D	Effective mode:	Real time
Min.:	-10.000	Unit:	V
Max.:	10.000	Data type:	Int16
Default mode:	2.000	Change mode:	At once

Range:
-10.000 to 10.000
Parameter description
When analog voltage correction is performed on AO1, a correction curve is formed through two points, corresponding to a target voltage and a measured voltage. The target voltage is the expected output voltage, and the measured voltage is the output voltage measured.

AC-14 **Target voltage 2 of AO1**

Address:	0xAC0E	Effective mode:	Real time
Min.:	-10.000	Unit:	V
Max.:	10.000	Data type:	Int16
Default mode:	8.000	Change mode:	At once

Range:
-10.000 to 10.000
Parameter description
When analog voltage correction is performed on AO1, a correction curve is formed through two points, corresponding to a target voltage and a measured voltage. The target voltage is the expected output voltage, and the measured voltage is the output voltage measured.

AC-15 **Measured voltage 2 of AO1**

Address:	0xAC0F	Effective mode:	Real time
Min.:	-10.000	Unit:	V
Max.:	10.000	Data type:	Int16
Default mode:	8.000	Change mode:	At once

Range:
-10.000 to 10.000
Parameter description
When analog voltage correction is performed on AO1, a correction curve is formed through two points, corresponding to a target voltage and a measured voltage. The target voltage is the expected output voltage, and the measured voltage is the output voltage measured.

9.19 U0 Basic Monitoring Parameters

U0-00 **Running frequency (Hz)**

Address:	0x7000	Effective mode:	Real time
Min.:	0.00	Unit:	Hz
Max.:	500.00	Data type:	UInt16
Default mode:	0.00	Change mode:	Unchangeable

Range:

0.00 to 500.00

Parameter description

This parameter displays the absolute value of the drive operating frequency.

U0-01 **Frequency reference (Hz)**

Address:	0x7001	Effective mode:	Real time
Min.:	0.00	Unit:	Hz
Max.:	500.00	Data type:	UInt16
Default mode:	0.00	Change mode:	Unchangeable

Range:

0.00 to 500.00

Parameter description

This parameter displays the absolute value of the drive frequency reference.

U0-02 **Bus voltage (V)**

Address:	0x7002	Effective mode:	Real time
Min.:	0.0	Unit:	V
Max.:	3000.0	Data type:	UInt16
Default mode:	0.0	Change mode:	Unchangeable:

Range:

0.0 to 3000.0

Parameter description

This parameter displays the bus voltage of the AC drive.

U0-03 **Output voltage (V)**

Address:	0x7003	Effective mode:	Real time
Min.:	0	Unit:	V
Max.:	1140	Data type:	UInt16

Default mode:	0	Change mode:	Unchangeable

Range:
0 to 1140

Parameter description
This parameter displays the output voltage of the drive during operation.

U0-04 **Output current/A**

Address:	0x7004	Effective mode:	Real time
Min.:	0.00	Unit:	A
Max.:	655.35	Data type:	UInt16
Default mode:	0.00	Change mode:	Unchangeable

Range:
0.00 to 655.35

Parameter description
This parameter displays the output current of the drive during operation. Note that when the power is lower than or equal to 55 kW, the decimal place is 0.01. When the power is higher than 55 kW, the decimal place is 0.1.

U0-05 **Output power (kW)**

Address:	0x7005	Effective mode:	Real time
Min.:	0.0	Unit:	kW
Max.:	3276.7	Data type:	Int16
Default mode:	0.0	Change mode:	Unchangeable

Range:
0.0 to 3276.7

Parameter description
This parameter displays the output power of the drive during operation.

U0-06 **Output torque (%)**

Address:	0x7006	Effective mode:	Real time
Min.:	-200.0	Unit:	%
Max.:	200.0	Data type:	Int16
Default mode:	0.0	Change mode:	Unchangeable:

Range:
-200.0 to 200.0

Parameter description

This parameter displays the output torque of the drive during operation. The value is a percentage of the output torque to the rated motor torque.

U0-07 DI input state

Address:	0x7007	Effective mode:	Real time
Min.:	0	Unit:	-
Max.:	32767	Data type:	UInt16
Default mode:	0	Change mode:	Unchangeable

Range:

0 to 32767

Parameter description

This parameter displays the input state of each DI terminal in hexadecimal. After the hexadecimal number is converted to a binary equivalent, each bit represents the state of each DI terminal.

The bit values correspond to the following states.

1: DI terminal active

0: DI terminal inactive

The functions of the bits are as follows.

Bit 0: DI1
Bit 1: DI2
Bit 2: DI3
Bit 3: DI4
Bit 4: DI5
Bit 5: DI6
Bit 6: DI7
Bit 7: DI8
Bit 8: DI9
Bit 9: DI10
Bit 10: DI11
Bit 11: DI12
Bit 12: DI13
Bit 13: DI14
Bit 14: DI15
Bit 15: Reserved

U0-08 DO output state

Address:	0x7008	Effective mode:	Real time
Min.:	0	Unit:	-
Max.:	32767	Data type:	UInt16

Default mode:	0	Change mode:	Unchangeable

Range:
0 to 32767

Parameter description
This parameter displays the output state of each DO terminal in hexadecimal. After the hexadecimal number is converted to a binary equivalent, each bit represents the state of each DO terminal.

The bit values correspond to the following states.
1: DO terminal active
0: DO terminal inactive
The functions of the bits are as follows.
Bit 0: FMR
Bit 1: DO3 (control board relay)
Bit 2: DO4 (MD38IO expansion board relay)
Bit 3: DO1 (control board)
Bit 4: DO2 (MD38IO expansion board)
Bit 5: VDO1
Bit 6: VDO2
Bit 7: VDO3
Bit 8: VDO4
Bit 9: VDO5
Bit 10 to bit 15: Reserved

U0-09 AI1 voltage (V)

Address:	0x7009	Effective mode:	Real time
Min.:	-10.57	Unit:	V
Max.:	10.57	Data type:	Int16
Default mode:	0.00	Change mode:	Unchangeable

Range:
-10.57 to 10.57

Parameter description
This parameter displays the actual input corrected voltage/current. The actual input voltage/current is corrected linearly to reduce the deviation between the analog input sampling voltage/current and the actual input voltage/current. This parameter displays the actual input corrected voltage/current. For the analog input sampling voltage/current, see U0-21 and U0-22.
You can select voltage input or current input through J9 jumper cap on the control board.

U0-10 **Communication protocol**

Address:	0x700A	Effective mode:	Real time
Min.:	0	Unit:	-
Max.:	1	Data type:	Int16
Default mode:	0	Change mode:	Unchangeable

Range:

0 to 1

Parameter description

0: CAN communication

1: RS485 communication

U0-11 **Voltage (V) input through external operating panel potentiometer**

Address:	0x700B	Effective mode:	Real time
Min.:	-10.57	Unit:	V
Max.:	10.57	Data type:	Int16
Default mode:	0.00	Change mode:	Unchangeable:

Range:

-10.57 to 10.57

Parameter description

This parameter displays the corrected voltage/current input through the external operating panel potentiometer.

U0-12 **Count value (applicable only to single-phase MD200SXX models)**

Address:	0x700C	Effective mode:	Real time
Min.:	0	Unit:	-
Max.:	65535	Data type:	UInt16
Default mode:	0	Change mode:	Unchangeable

Range:

0 to 65535

Parameter description

This parameter displays the counting value in the counting function.

U0-13 **Length value (applicable only to single-phase MD200SXX models)**

Address:	0x700D	Effective mode:	Real time
Min.:	0	Unit:	-
Max.:	65535	Data type:	UInt16

Default mode:	0	Change mode:	Unchangeable

Range:
0 to 65535

Parameter description
This parameter displays the length value in the fixed-length function.

U0-14 **Load speed display**

Address:	0x700E	Effective mode:	Real time
Min.:	0	Unit:	rpm
Max.:	65535	Data type:	UInt16
Default mode:	0	Change mode:	Unchangeable

Range:
0 to 65535

Parameter description
This parameter indicates the speed calculated based on the frequency reference. The formula is n = 60f/p, where f is the frequency reference U0-01 and p is the number of motor pole pairs.
The number of decimal places for U0-14 is determined by the ones place of F7-12. When the ones place of F7-12 is set to 0, the number of decimal places for U0-14 is 0 and the display range is 0 rpm to 65535 rpm. When the ones place of F7-12 is set to 1, the number of decimal places for U0-14 is 1 and the display range is 0.0 rpm to 65535.0 rpm. When the ones place of F7-12 is set to 2, the number of decimal places for U0-14 is 2 and the display range is 0.00 rpm to 65535.00 rpm.

U0-15 **PID reference**

Address:	0x700F	Effective mode:	Real time
Min.:	0	Unit:	%
Max.:	65535	Data type:	UInt16
Default mode:	0	Change mode:	Unchangeable

Range:
0 to 65535

Parameter description
PID reference = PID reference (percentage) x FA-04 (PID reference feedback range)

U0-16 **PID feedback**

Address:	0x7010	Effective mode:	Real time
Min.:	0	Unit:	%
Max.:	65535	Data type:	UInt16
Default mode:	0	Change mode:	Unchangeable

Range:

0 to 65535

Parameter description

PID feedback = PID feedback (percentage) x FA-04 (PID reference feedback range)

U0-17 **PLC stage**

Address:	0x7011	Effective mode:	Real time
Min.:	0	Unit:	-
Max.:	65535	Data type:	UInt16
Default mode:	0	Change mode:	Unchangeable

Range:

0 to 65535

Parameter description

This parameter displays the current simple PLC stage, which supports 16 speeds.

U0-18 **Pulse input frequency (kHz)**

Address:	0x7012	Effective mode:	Real time
Min.:	0.00	Unit:	kHz
Max.:	100.00	Data type:	UInt16
Default mode:	0.00	Change mode:	Unchangeable:

Range:

0.00 to 100.00

Parameter description

This parameter displays the high-speed pulse sampling frequency of DI4 (applicable to MD200XXX models) or DI/DO (applicable to MD200XXX-NC models). The values of U0-18 and U0-27 are the same but in different units. The unit of U0-27 is Hz and the unit of U0-18 is kHz.

U0-19 **Feedback speed (Hz)**

Address:	0x7013	Effective mode:	Real time

Min.:	-5000.0	Unit:	Hz
Max.:	5000.0	Data type:	Int16
Default mode:	0.0	Change mode:	Unchangeable

Range:

-5000.0 to 5000.0

Parameter description

This parameter displays the feedback speed (Hz).

The number of decimal places for U0-19 is determined by the tens place of F7-12. When the tens place of F7-12 (number of decimal places for load speed display) is set to 1, the number of decimal places for U0-19 is 1 and the display range is -5000.0 Hz to 5000.0 Hz. When the tens place of F7-12 (number of decimal places for load speed display) is set to 2, the number of decimal places for U0-19 is 2 and the display range is -5000.00 Hz to 5000.00 Hz.

U0-20 Remaining running time (min.)

Address:	0x7014	Effective mode:	Real time
Min.:	0.0	Unit:	min
Max.:	6500.0	Data type:	UInt16
Default mode:	0.0	Change mode:	Unchangeable

Range:

0.0 to 6500.0

Parameter description

This parameter displays the remaining running time.

U0-21 AI1 voltage before correction (V)

Address:	0x7015	Effective mode:	Real time
Min.:	-10.570	Unit:	V
Max.:	10.570	Data type:	Int16
Default mode:	0.000	Change mode:	Unchangeable

Range:

-10.570 to 10.570

Parameter description

This parameter displays the analog input sampling voltage/current. The actual input voltage/current is corrected linearly to reduce the deviation between the analog input sampling voltage/current and the actual input voltage/current. For the actual input corrected voltage/current, see U0-09 and U0-11.

U0-22 **External operating panel potentiometer voltage before correction (V)**

Address:	0x7016	Effective mode:	Real time
Min.:	-10.570	Unit:	V
Max.:	10.570	Data type:	Int16
Default mode:	0.000	Change mode:	Unchangeable

Range:

-10.570 to 10.570

Parameter description

This parameter displays the analog input sampling voltage/current. The actual input voltage/current is corrected linearly to reduce the deviation between the analog input sampling voltage/current and the actual input voltage/current. For the actual input corrected voltage/current, see U0-09 and U0-11.

U0-24 **Linear speed**

Address:	0x7018	Effective mode:	Real time
Min.:	0	Unit:	m/min
Max.:	65535	Data type:	UInt16
Default mode:	0	Change mode:	Unchangeable

Range:

0 to 65535

Parameter description

This parameter displays the linear speed.

U0-25 **Current power-on time (min.)**

Address:	0x7019	Effective mode:	Real time
Min.:	0	Unit:	min
Max.:	65535	Data type:	UInt16
Default mode:	0	Change mode:	Unchangeable

Range:

0 to 65535

Parameter description

This parameter displays the current power-on time.

U0-26 **Current running time (min)**

Address:	0x701A	Effective mode:	Real time

Min.:	0.0	Unit:	min
Max.:	6553.5	Data type:	UInt16
Default mode:	0.0	Change mode:	Unchangeable

Range:

0.0 to 6553.5

Parameter description

This parameter displays the current running time.

U0-27 **Pulse input frequency (Hz)**

Address:	0x701B	Effective mode:	Real time
Min.:	0	Unit:	Hz
Max.:	65535	Data type:	UInt16
Default mode:	0	Change mode:	Unchangeable

Range:

0 to 65535

Parameter description

This parameter displays the high-speed pulse sampling frequency of DI4 (applicable to MD200XXX models) or DI/DO (applicable to MD200XXX-NC models). The values of this parameter and U0-18 are the same but in different units. The unit of U0-27 is Hz and the unit of U0-18 is kHz.

U0-28 **Reference value set through communication**

Address:	0x701C	Effective mode:	Real time
Min.:	-100.00	Unit:	%
Max.:	100.00	Data type:	Int16
Default mode:	0.00	Change mode:	Unchangeable:

Range:

-100.00 to 100.00

Parameter description

This parameter indicates the data written by the communication address 0x1000. The percentage basis is defined by the setpoint of the communication address 0x1000.

U0-30 **Main frequency X display (Hz)**

Address:	0x701E	Effective mode:	Real time
Min.:	-500.00	Unit:	Hz
Max.:	500.00	Data type:	Int16

Default mode:	0.00	Change mode:	Unchangeable

Range:

-500.00 to 500.00

Parameter description

This parameter displays the main frequency reference.

U0-31 Auxiliary frequency Y display (Hz)

Address:	0x701F	Effective mode:	Real time
Min.:	-500.00	Unit:	Hz
Max.:	500.00	Data type:	Int16
Default mode:	0.00	Change mode:	Unchangeable

Range:

-500.00 to 500.00

Parameter description

This parameter displays the auxiliary frequency reference.

U0-32 Memory address view

Address:	0x7020	Effective mode:	Real time
Min.:	0	Unit:	-
Max.:	65535	Data type:	UInt16
Default mode:	0	Change mode:	Unchangeable

Range:

0 to 65535

Parameter description

This parameter is used to view any memory address.

U0-34 Motor temperature

Address:	0x7022	Effective mode:	Real time
Min.:	0	Unit:	℃
Max.:	200	Data type:	UInt16
Default mode:	0	Change mode:	Unchangeable

Range:

0 to 200

Parameter description

This parameter displays the motor temperature sampled through AI3. For motor temperature detection, see F9-56 (Motor temperature sensor type).

U0-35 **Target torque (%) (applicable only to single-phase MD200SXX models)**

Address:	0x7023	Effective mode:	Real time
Min.:	-200.0	Unit:	%
Max.:	200.0	Data type:	Int16
Default mode:	0.0	Change mode:	Unchangeable

Range:

-200.0 to 200.0

Parameter description

This parameter indicates the current torque upper limit, which is a percentage to the rated motor torque.

U0-37 **Power factor angle**

Address:	0x7025	Effective mode:	Real time
Min.:	0.0	Unit:	°
Max.:	6553.5	Data type:	UInt16
Default mode:	0.0	Change mode:	Unchangeable:

Range:

0.0 to 6553.5

Parameter description

This parameter displays the power factor angle.

U0-39 **Target voltage in V/f decoupled mode**

Address:	0x7027	Effective mode:	Real time
Min.:	0	Unit:	V
Max.:	65535	Data type:	UInt16
Default mode:	0	Change mode:	Unchangeable:

Range:

0 to 65535

Parameter description

This parameter displays the target output voltage in the V/f decoupled status.

U0-40 **Output voltage in V/f decoupled mode**

Address:	0x7028	Effective mode:	Real time
Min.:	0	Unit:	V
Max.:	65535	Data type:	UInt16
Default mode:	0	Change mode:	Unchangeable

Range:
0 to 65535
Parameter description
This parameter displays the actual output voltage in the V/f decoupled mode.

U0-45 **Fault subcode**

Address:	0x702D	Effective mode:	Real time
Min.:	0	Unit:	-
Max.:	65535	Data type:	UInt16
Default mode:	0	Change mode:	Unchangeable

Range:
0 to 65535
Parameter description
This parameter displays the current fault code.

U0-61 **AC drive state**

Address:	0x703D	Effective mode:	Real time
Min.:	0	Unit:	-
Max.:	65535	Data type:	UInt16
Default mode:	0	Change mode:	Unchangeable

Range:
0 to 65535
Parameter description
This parameter displays the monitoring state of bit 0 to bit 4.
When bit 1 and bit 0 are monitored, 0 indicates "stop", 1 indicates "forward running", and 2 indicates "reverse running".
When bit 2 and bit 3 are monitored, 0 indicates "constant speed, 1 indicates "acceleration", and 2 indicates "deceleration".
When bit 4 is monitored, 0 indicates "bus voltage normal" and 1 indicates "undervoltage".

U0-62 **Fault code**

Address:	0x703E	Effective mode:	Real time
Min.:	0	Unit:	-
Max.:	99	Data type:	UInt16
Default mode:	0	Change mode:	Unchangeable

Range:

0 to 99

Parameter description

This parameter displays the current fault code. For example, 2 represents Err02.

U0-65 **Torque upper limit (%) (applicable only to single-phase MD200SXX models)**

Address:	0x7041	Effective mode:	Real time
Min.:	-200.0	Unit:	%
Max.:	200.0	Data type:	Int16
Default mode:	0.0	Change mode:	Unchangeable:

Range:

-200.0 to 200.0

Parameter description

This parameter displays the torque upper limit.

U0-69 **Motor rotation frequency**

Address:	0x7045	Effective mode:	Real time
Min.:	0.00	Unit:	Hz
Max.:	655.35	Data type:	Int16
Default mode:	0.00	Change mode:	Unchangeable

Range:

0.00 to 655.35

Parameter description

This parameter displays the motor rotation frequency.

U0-70 **Motor speed**

Address:	0x7046	Effective mode:	Real time
Min.:	-32767	Unit:	RPM
Max.:	32767	Data type:	Int16
Default mode:	0	Change mode:	Unchangeable

Range:

-32767 to 32767

Parameter description

This parameter displays the motor speed.

U0-71 **Communication card-specific current (A)**

Address:	0x7047	Effective mode:	Real time
Min.:	0.0	Unit:	A
Max.:	6553.5	Data type:	UInt16
Default mode:	0.0	Change mode:	Unchangeable

Range:

0.0 to 6553.5

Parameter description

This parameter displays the current dedicated for the communication card.

U0-74 **Actual motor output torque**

Address:	0x704A	Effective mode:	Real time
Min.:	0.0	Unit:	%
Max.:	6553.5	Data type:	Int16
Default mode:	0.0	Change mode:	Unchangeable:

Range:

0.0 to 6553.5

Parameter description

This parameter displays the actual motor output torque.

U0-77 **Pre-charge mark**

Address:	0x704D	Effective mode:	Real time
Min.:	0	Unit:	-
Max.:	1	Data type:	UInt16
Default mode:	0	Change mode:	Unchangeable

Range:

0 to 1

Parameter description

-

U0-78 **Linear speed (applicable only to single-phase MD200SXX models)**

Address:	0x704E	Effective mode:	Real time
Min.:	0	Unit:	m/min
Max.:	65535	Data type:	UInt16
Default mode:	0	Change mode:	Unchangeable

Range:
0 to 65535
Parameter description
This parameter displays the linear speed.

10 Appendix

10.1 Single-Phase AC Drive Driving Multiple Motors

The following figure shows the MD200 series single-phase AC drive driving multiple motors.

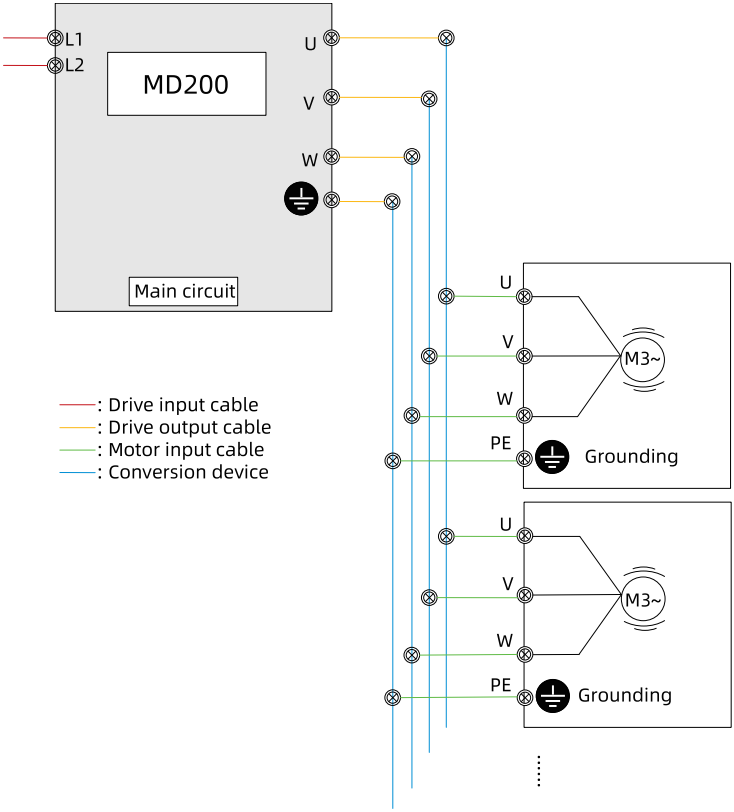

Figure 10-1 Single-phase AC drive driving multiple motors

Note

The single-phase AC drive can drive multiple motors only in the V/f mode.

Requirements on the drive

The AC drive is single-phase and the power of the AC drive is 400 W or 750 W.

Requirement on motors

The power of the motor is 200 W or 250 W.

Note

- Working condition requirements: Single-phase AC drive with the power rating of 400 W work together with two motors with the power rating of 200 W.
- Working condition requirements: Single-phase AC drive with the power rating of 750 W work together with two or three motors with the power rating of 250 W.

Requirements on input/output cables

- Non-North American market: For wiring requirements, see general wiring requirements.
- North America market: The input/output cable diameter of the AC drive must be at least 14AWG. The recommended cable diameter of the motor power cable is 14AWG to 18AWG.

Requirements on adapters

It is recommended to use certified terminals that feature single-input and multiple-output or certified copper busbars (with the insulation design meeting requirements).

10.2 Appearance and Dimensions of MDKE8

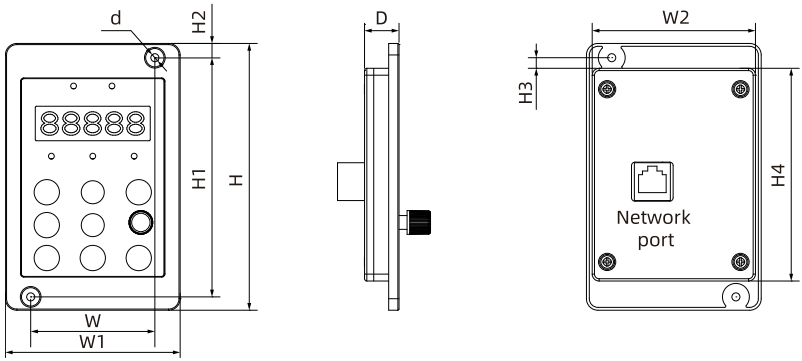

Figure 10-2 Appearance and dimensions of MDKE8

Outline dimension (mm)									Mounting hole diameter (mm)
H	H1	H2	H3	H4	W	W1	W2	D	d
116	104	6.2	4.6	92.5	54	76	71	15	3.5

Service and Support

Should you encounter a safety accident during the use or operation of the product, or face challenges in operating and maintaining the equipment, which remain unresolved after the relevant documentation is consulted, we provide multiple channels to ensure prompt resolution:

- Channel #1: Contact service@inovance.com.
- Channel #2: Visit https://www.inovance.com/global to access document downloads, after-sales support, spare parts ordering, repair applications, and authenticity verification services.
- Channel #3: Download My Inovance app (https://zshc-eu.inovance.com/download-pc/) where you can access products info and documentation, and query product parameters.

We are committed to providing you with quick and professional technical support, and we look forward to your satisfaction and trust.

19012113C06

Copyright © Shenzhen Inovance Technology Co., Ltd.

Shenzhen Inovance Technology Co., Ltd.

www.inovance.com

Add.: Inovance Headquarters Tower, High-tech Industrial Park,
Guanlan Street, Longhua New District,
Shenzhen 518000, P.R. China
Tel: (0755) 2979 9595 Fax: (0755) 2961 9897

Suzhou Inovance Technology Co., Ltd.

www.inovance.com

Add.: No. 52, Tian E Dang Road, Wuzhong District, 215104,
Suzhou City, Jiangsu Province, P.R. China
Tel: (0512) 6637 6666 Fax: (0512) 6285 6720