INOVANCE

FORWARD, ALWAYS PROGRESSING

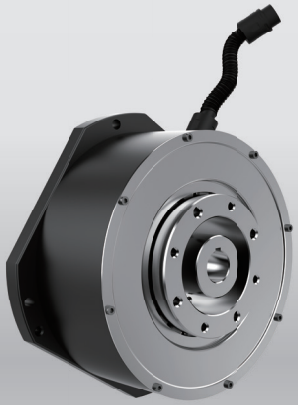

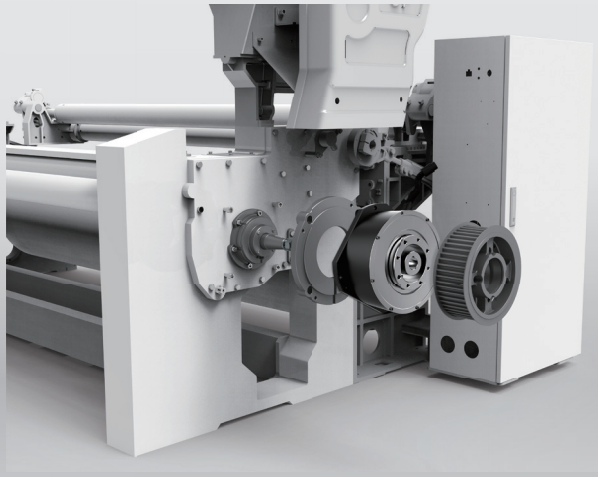

# Electrical Spindle Drive For Looms

## User Guide

Industrial Automation | Intelligent Elevator | New Energy Vehicle | Industrial Robot | Rail Transit

Data code 19011248 A02

# Preface

Thank you for purchasing the ITD500E series electric spindle drive for looms.

The ITD500E series drive (hereafter referred to as "drive") is developed for the electric spindle of looms in the textile industry. It is needs to be used in combination with Inovance MX series electric spindle motor for looms (hereafter referred to as "spindle motor").

This drive is easy to use and quick to install. It is equipped with various function modes to fit the control demands of air/water jet loom systems.

This user guide provides safety instructions and information concerning the product, installation, operating panel, mode setting, quick commissioning, and troubleshooting.

First-time users must read through this user guide. If you have any question concerning product functions or performance, contact Inovance for technical support.

| Notes |
| --- |
| ◆ The drawings in the user guide are sometimes shown without covers or protective guards. Remember to install the covers or protective guards as specified first, and then perform operations in accordance with the instructions described in the user guide.<br>◆ The drawings in the user guide are shown for descriptions only and may not match the product you purchased.<br>◆ This user guide is subject to change without notice due to product upgrade, specification modifications as well as efforts to improve the accuracy and convenience of the user guide.<br>◆ If the user guide is damaged or lost, contact our regional agents or customer service centers to order the user guide.<br>◆ Contact Inovance customer service center for concerns during use. |

## Revision History

| Date | Version | Description |
| --- | --- | --- |
| March 2020 | A00 | First release |
| November 2020 | A01 | Minor corrections |
| August 2022 | A02 | Chapter 8 Installation and Use of MX Series Spindle Motors: update information of electric spindle.<br>3.2.1 Description of Control Circuit Terminals: update the description of Jumper AI 2. |

# Contents

Preface ..... 2
Revision History ..... 2
Safety Instructions ..... 5
Safety Precautions ..... 5
Safety Levels and Definitions ..... 5
Safety Instructions ..... 5
Safety Signs ..... 10
1 Product Information ..... 11
1.1 Model Number ..... 11
1.2 Nameplate ..... 11
1.3 Ratings ..... 11
1.4 Technical Specifications ..... 12
2 Installation ..... 13
2.1 Installation Environment ..... 13
2.2 Installation Clearances ..... 14
2.3 Installation Dimensions ..... 14
2.4 Installation Procedure ..... 15
3 Wiring ..... 18
3.1. Description and Wiring of Main Circuit Terminals ..... 18
3.1.1 Description of Main Circuit Terminals ..... 18
3.1.2 Wiring ..... 19
3.2 Description and Wiring of Control Circuit Terminals ..... 20
3.2.1 Description of Control Circuit Terminals ..... 20
3.2.2 Wiring ..... 21
3.3 System Wiring ..... 23
4 Operating Panel ..... 25
4.1 Introduction to the Operating Panel ..... 25
4.1.1 Indicators on the Operating Panel ..... 25
4.1.2 Display ..... 27
4.1.3 Description of the Keys ..... 28
4.2 Parameter View and Setting ..... 28
4.2.1 Parameter Setting ..... 28
4.2.2 Parameter View ..... 29

4.3 Password Lock ..... 30
5 Quick Commissioning ..... 31
5.1 Pre-commissioning Tasks ..... 31
5.1.1 Installation of MX Series Spindle Motors ..... 31
5.1.2 Pre-commissioning Inspection ..... 31
5.2 Quick Commissioning Process/Guide ..... 32
5.3 Air Jet Mode (A0.08 = 3) ..... 33
5.4 Water Jet Mode (A0.08 = 5) ..... 34
6 Parameters ..... 35
6.1 DI Function Parameter Settings ..... 35
6.2 DI Multi-Speed Function Settings ..... 35
6.3 Group A: Basic Parameters ..... 35
6.4 Group B: Control Parameters ..... 37
6.5 Group U: Monitoring Parameters ..... 45
7 Troubleshooting ..... 47
7.1 Solutions to Performance Faults ..... 47
7.2 Solutions for Functional Faults ..... 49
8 Installation and Use of MX Series Spindle Motors ..... 50
8.1 Product Information ..... 52
8.1.1 Product Nameplate ..... 52
8.1.2 Components ..... 52
8.1.3 Product Specifications ..... 53
8.2 Installation Preparations ..... 54
8.2.1 Installation Precautions ..... 54
8.2.2 Tools for Installation and Disassembly ..... 54
8.2.3 Recommended Tightening Torque and Screw Specifications ..... 55
8.3 Installation Guide ..... 56
8.3.1 Installation Process ..... 56
8.3.2 Installation Procedure ..... 57
8.3.3 Diagram of Complete Device ..... 60
8.3.4 Precautions After Installation ..... 60
8.4 Disassembly Guide ..... 61
8.4.1 Disassembly Process ..... 61
8.4.2 Disassembly Procedure ..... 61
8.5 Commissioning of the Spindle Motor ..... 62

# Safety Instructions

## Safety Precautions

1) Before installing, using, and maintaining this equipment, read the safety information and precautions thoroughly, and comply with them during operations.
2) To ensure the safety of humans and equipment, follow the signs on the equipment and all the safety instructions in this user guide.
3) "CAUTION", "WARNING", and "DANGER" items in the user guide do not indicate all safety precautions that need to be followed; instead, they just supplement the safety precautions.
4) Use this equipment according to the designated environment requirements. Damage caused by improper usage is not covered by warranty.
5) Inovance shall take no responsibility for any personal injuries or property damage caused by improper usage.

## Safety Levels and Definitions

| | |
|---|---|
|  DANGER | indicates that failure to comply with the notice will result in severe personal injuries or even death. |
|  WARNING | indicates that failure to comply with the notice may result in severe personal injuries or even death. |
|  CAUTION | indicates that failure to comply with the notice may result in minor personal injuries or damage to the equipment. |

## Safety Instructions

| Unpacking |
|---|
|  CAUTION<br>◆ Check whether the packing is intact and whether there is damage, water seepage, damp, and deformation.<br>◆ Unpack the package by following the package sequence. Do not hit the package with force.<br>◆ Check whether there are damage, rust, or injuries on the surface of the equipment or equipment accessories.<br>◆ Check whether the number of packing materials is consistent with the packing list. |




- Do not install the equipment if you find damage, rust, or indications of use on the equipment or accessories.
- Do not install the equipment if you find water seepage, component missing or damage upon unpacking.
- Do not install the equipment if you find the packing list does not conform to the equipment you received.

## Storage and Transportation




- Store and transport this equipment based on the storage and transportation requirements for humidity and temperature.
- Avoid transporting the equipment in environments such as water splashing, rain, direct sunlight, strong electric field, strong magnetic field, and strong vibration.
- Avoid storing this equipment for more than three months. Long-term storage requires stricter protection and necessary inspections.
- Pack the equipment strictly before transportation. Use a sealed box for long-distance transportation.
- Never transport this equipment with other equipment or materials that may harm or have negative impacts on this equipment.




- Use professional loading and unloading equipment to carry large-scale or heavy equipment.
- When carrying this equipment with bare hands, hold the equipment casing firmly with care to prevent parts falling. Failure to comply may result in personal injuries.
- Handle the equipment with care during transportation and mind your step to prevent personal injuries or equipment damage.
- Never stand or stay below the equipment when the equipment is lifted by hoisting equipment.

## Installation




- Thoroughly read the safety instructions and user guide before installation.
- Do not modify this equipment.
- Do not rotate the equipment components or loosen fixed bolts (especially those marked in red) on equipment components.
- Do not install this equipment in places with strong electric or magnetic fields.
- When this equipment is installed in a cabinet or final equipment, protection measures such as a fireproof enclosure, electrical enclosure, or mechanical enclosure must be provided. The IP rating must meet IEC standards and local laws and regulations.




- Equipment installation, wiring, maintenance, inspection, or parts replacement must be performed by only professionals.
- Installation, wiring, maintenance, inspection, or parts replacement must be performed by only experienced personnel who have been trained with necessary electrical information.
- Installation personnel must be familiar with equipment installation requirements and relevant technical materials.
- Before installing equipment with strong electromagnetic interference, such as a transformer, install an electromagnetic shielding device for this equipment to prevent malfunctions.

Wiring




- Equipment installation, wiring, maintenance, inspection, or parts replacement must be performed by only professionals.
- Never perform wiring at power-on. Failure to comply will result in an electric shock.
- Before wiring, cut off all equipment power supplies. Wait at least 10 minutes before further operations because residual voltage exists after power-off.
- Make sure that the equipment is well grounded. Failure to comply will result in an electric shock.
- During wiring, follow the proper electrostatic discharge (ESD) procedures, and wear an antistatic wrist strap. Failure to comply will result in damage to internal equipment circuits.




- Never connect the power cable to output terminals of the equipment. Failure to comply may cause equipment damage or even a fire.
- When connecting a drive with the motor, make sure that the phase sequences of the drive and motor terminals are consistent to prevent reverse motor rotation.
- Wiring cables must meet diameter and shielding requirements. The shielding layer of the shielded cable must be reliably grounded at one end.
- After wiring, make sure that no screws are fallen and cables are exposed in the equipment.

| Power-on |
| --- |
|  DANGER<br>◆ Before power-on, make sure that the equipment is installed properly with reliable wiring and the motor can be restarted.<br>◆ Before power-on, make sure that the power supply meets equipment requirements to prevent equipment damage or even a fire.<br>◆ At power-on, unexpected operations may be triggered on the equipment. Therefore, stay away from the equipment.<br>◆ After power-on, do not open the cabinet door and protective cover of the equipment. Failure to comply will result in an electric shock.<br>◆ Do not touch any wiring terminals at power-on. Failure to comply will result in an electric shock.<br>◆ Do not remove any part of the equipment at power-on. Failure to comply will result in an electric shock. |
| Operation |
|  DANGER<br>◆ Do not touch any wiring terminals during operation. Failure to comply will result in an electric shock.<br>◆ Do not remove any part of the equipment during operation. Failure to comply will result in an electric shock.<br>◆ Do not touch the equipment shell, fan, or resistor for temperature detection. Failure to comply will result in heat injuries.<br>◆ Signal detection must be performed by only professionals during operation. Failure to comply will result in personal injuries or equipment damage. |
|  WARNING<br>◆ Prevent metal or other objects from falling into the device during operation. Failure to comply may result in equipment damage.<br>◆ Do not start or stop the equipment using the contactor. Failure to comply may result in equipment damage. |
| Maintenance |
|  DANGER<br>◆ Equipment installation, wiring, maintenance, inspection, or parts replacement must be performed by only professionals.<br>◆ Do not maintain the equipment at power-on. Failure to comply will result in an electric shock.<br>◆ Before maintenance, cut off all equipment power supplies and wait at least 10 minutes. |




- Perform daily and periodic inspection and maintenance for the equipment according to maintenance requirements and keep a maintenance record.

Repair




- Equipment installation, wiring, maintenance, inspection, or parts replacement must be performed by only professionals.
- Do not repair the equipment at power-on. Failure to comply will result in an electric shock.
- Before inspection and repair, cut off all equipment power supplies and wait at least 10 minutes.




- Require for repair services according to the product warranty agreement.
- When the equipment is faulty or damaged, require professionals to perform troubleshooting and repair by following repair instructions and keep a repair record.
- Replace quick-wear parts of the equipment according to the replacement guide.
- Do not operate damaged equipment. Failure to comply may result in worse damage.
- After the equipment is replaced, perform wiring inspection and parameter settings again.

Disposal




- Dispose of retired equipment by following local regulations or standards. Failure to comply may result in property damage, personal injuries, or even death.
- Recycle retired equipment by following industry waste disposal standards to avoid environmental pollution.

## Safety Signs

For safe equipment operation and maintenance, comply with safety signs on the equipment, and do not damage or remove the safety labels. The following table describes the safety signs.

| Safety Sign | Description |
| --- | --- |
|  | ◆ Read the user guide before installation and operation. Failure to comply will result in an electric shock.<br>◆ Do not remove the cover at power-on or within 10 minutes after power-off.<br>◆ Before maintenance, inspection, and wiring, cut off input and output power, and wait at least 10 minutes until the power indicator is off. |

# 1 Product Information

## 1.1 Model Number

ITD 500E - 4T 37 SDB - G

| Code | Product Category |
|---|---|
| ITD | AC drive for textile industry |

| Code | Technical Platform |
|---|---|
| 500 | 500 technical platform |

| Code | Motor Type |
|---|---|
| E | Synchronous motor |
| Null | Asynchronous motor |

| Code | Voltage Class |
|---|---|
| 4 | 380 V |
| T | Three-phase |

| Code | Applicable Spindle Motor Power (kW) |
|---|---|
| 37 | 3.7/4.5 |

| Code | Product Type |
|---|---|
| SDB | With brake |

| Code | Type |
|---|---|
| Null | Built-in, white |
| G | Built-in, gray |
| S | External |

Figure 1-1 Naming Rules of the drive

## 1.2 Nameplate

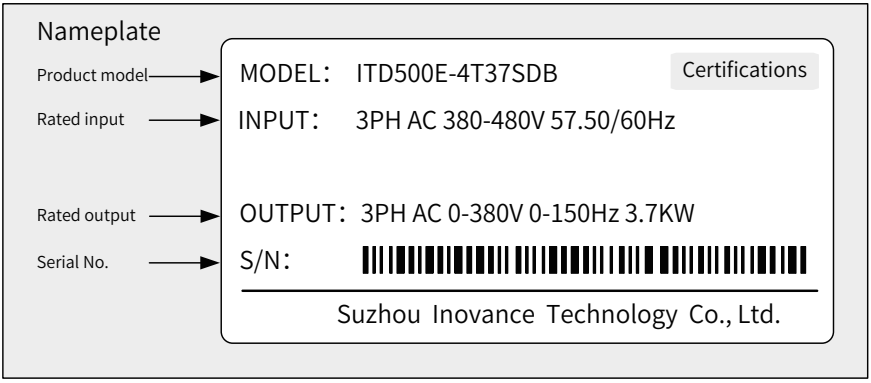


Figure 1-2 Nameplate of the drive

## 1.3 Ratings

| Drive Model | Power Capacity (kVA) | Input Current (A) | Output Current (A) | Applicable Spindle Motor (kW) |
|---|---|---|---|---|
| Three-phase 380 V (Range: 380–480 V), 50/60 Hz | | | | |
| ITD500E-4T37SDB | 6 | 9.2 | 9 | 3.7/4.5 |
| ITD500E-4T37SDB-G | 6 | 9.2 | 9 | 3.7/4.5 |
| ITD500E-4T37SDB-S | 6 | 9.2 | 9 | 3.7/4.5 |

## 1.4 Technical Specifications

| Item | | Specifications |
|---|---|---|
| Input Power | Number of phases, voltage, frequency | Three-phase, 380 V, 50/60 Hz |
| | Permissible voltage fluctuation | –15% to +25% |
| | Permissible frequency fluctuation | –5% to +5% |
| | Instantaneous voltage drop threshold | Uninterrupted under a voltage above 300 VAC<br>Undervoltage protection applied after running for 15 ms under a voltage dropped below 300 VAC |
| Output characteristics | Rated current | 9 A |
| | Max. current | 125 A (peak), 100 ms |
| | Output frequency | 0 Hz to 150 Hz |
| | Output voltage | 0 V to 380 V |
| Drive characteristics | Control mode | Vector control with PG card/Sensorless vector control |
| | Starting torque | Dependent on the power of the spindle motor |
| | Speed control range | 1:1000 (vector control with PG card) |
| | Speed control accuracy | ±0.05% (vector control with PG card, 25±10 °C ) |
| | Torque accuracy | 5% |
| | Frequency control range | 0 Hz to 150 Hz |
| | Frequency accuracy | ±0.1% |
| | Frequency setting resolution | 0.1 Hz/150 Hz |
| | Resolution of output frequency (calculation resolution) | 0.1 Hz |
| | Braking torque | Dependent on the power of the spindle motor |
| | Acceleration/ Deceleration time | 0.05s to 0.5s |
| | Carrier frequency | 2 kHz to 6 kHz |

# 2 Installation

## 2.1 Installation Environment

■ Environment requirement

| Item | Requirement |
|---|---|
| Altitude | Below 1000 m (derating required for an altitude above 1000 m)<br>Derating standard: Derate by 1% for every additional 100 m. The maximum altitude is 3000 m. |
| Ambient temperature | –10°C to +50°C , with temperature variation less than 0.5°C /min (derating required for an ambient temperature above 40°C )<br>Derating standard: Derate the rated current by 1.5% for every additional 1°C . The maximum ambient temperature is 50°C . |
| Storage temperature | –40°C to +60°C |
| Environment humidity | Less than 95% RH (no condensation) |
| Storage Humidity | Less than 95% RH (no condensation) |
| Vibration and shock | 5.9 $m/s^2$ (0.6 g) at a sine vibration of 2 Hz to 200 Hz |
| IP rating | IP20 |
| Heat dissipation and ventilation | When installing the drive on the backplate, ensure enough space is reserved around the drive for heat dissipation purpose. |
| Installation location | Install the drive in an environment free from<br>a) Direct sunlight, humidity (RH $>$ 95%) and water drops<br>b) Corrosive, inflammable or explosive gases<br>c) Greasy dirt and dust<br>d) Strong vibration (vibration acceleration $\leqslant$ 0.6 g) |
| Enclosure | The drive is intended to be installed in a final system equipped with fireproof enclosures that provide electrical and mechanical protection for industrial use. The installation must conform to local/regional laws and regulations and relevant IEC requirements. |

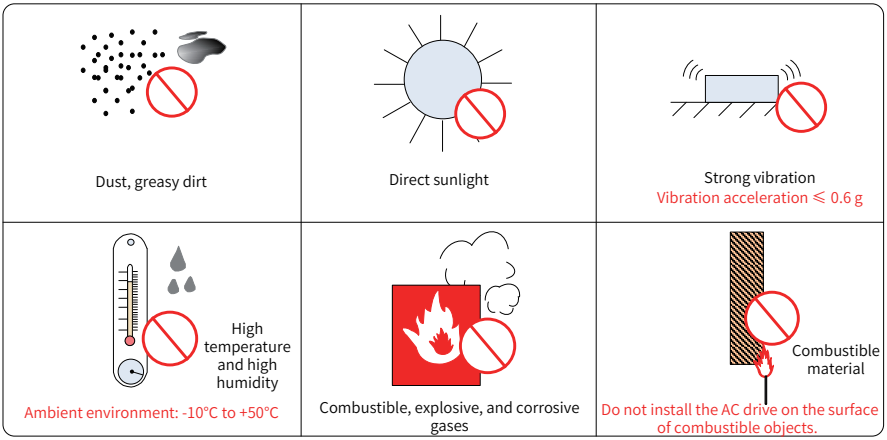


Figure 2-1 Environment requirements

## 2.2 Installation Clearances

ITD500E series drives are divided into built-in type and external type based on the installation mode. Reserve sufficient clearances during installation.

## 2.3 Installation Dimensions

■ Built-in type (ITD500E-4T37SDB/ITD500E-4T37SDB-G)

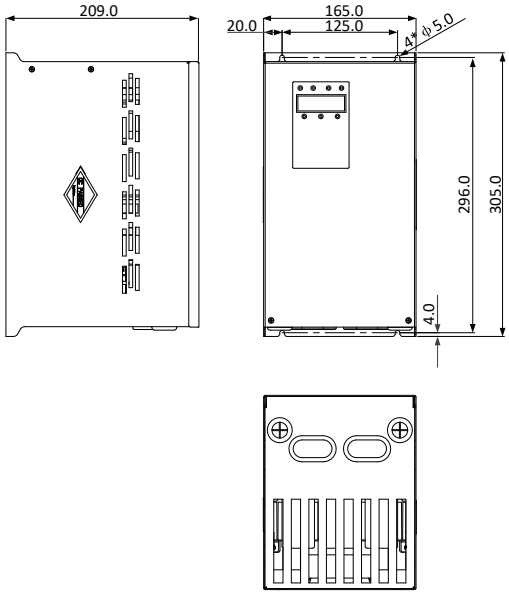


Figure 2-2 Dimensions of the built-in type (in mm)

■ External type (ITD500E-4T37SDB-S)

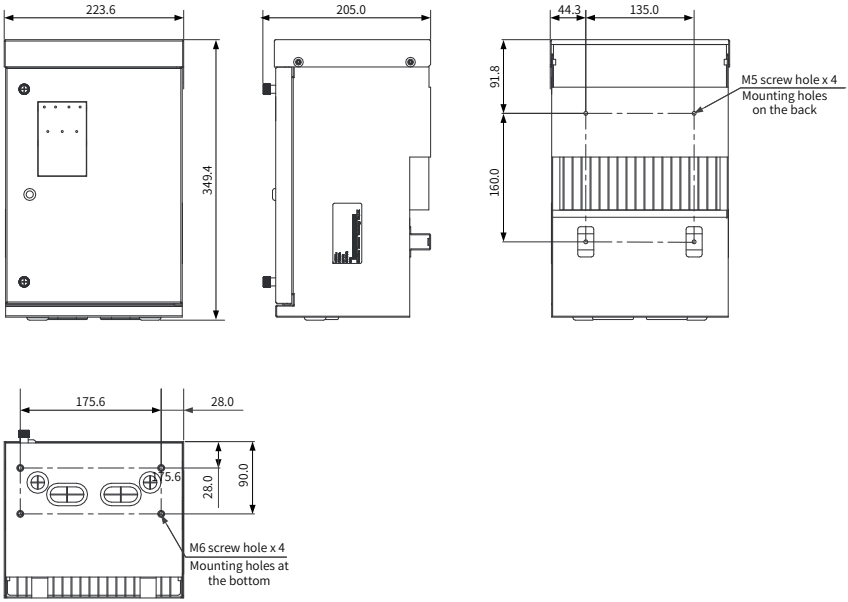


Figure 2-3 Dimensions of the external type (in mm)

## 2.4 Installation Procedure

The ITD500E series drive of built-in type must be installed inside the control cabinet.

Install the drive into the control cabinet according to product dimensions. Note that the ITD500E series drive has already been installed inside the control cabinet before delivery in Inovance TAJ200 series air jet control cabinets/TWJ200 series water jet control cabinets.

The installation modes for the ITD500E series drive of external type can be divided into backplate mounting and bottom plate mounting.

■ Backplate mounting

| Installation Procedure | Diagram |
|---|---|
| Step 1: Fix the four support washers ① onto the mounting holes on the back of the drive. | 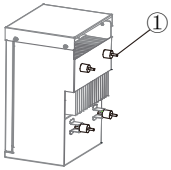  |

| Installation Procedure | Diagram |
|---|---|
| Step 2: Take the punch board ② as reference. Drill mounting holes on the backplate ③ with an electric drill (M6 through-hole). | 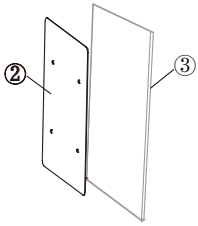 |
| Step 3: Take off the punch board for future use and install the drive on the mounting surface drilled with holes. | 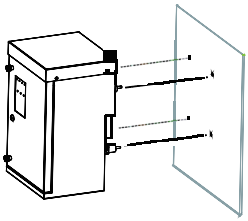 |
| Step 4: Secure the drive with nuts. | 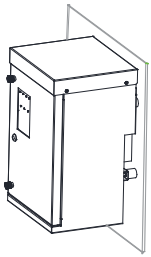 |

■ Bottom plate mounting

| Installation Procedure | Diagram |
|---|---|
| Step 1: Take the bottom punch board ① as reference. Drill mounting holes (M6.5 through-hole) on the bottom plate ② and use a tapper to drill the cable outlet holes (diameter: 30 mm). | 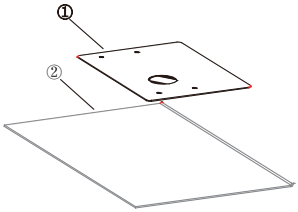 |

| Installation Procedure | Diagram |
| --- | --- |
| Step 2: Take off the punch board for future use and install the drive on the mounting surface drilled with holes. | 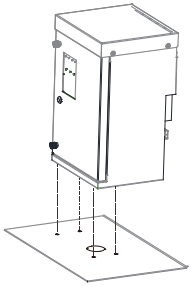 |
| Step 3: Secure the drive with nuts. | 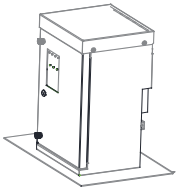 |

# 3 Wiring

## 3.1. Description and Wiring of Main Circuit Terminals

### 3.1.1 Description of Main Circuit Terminals

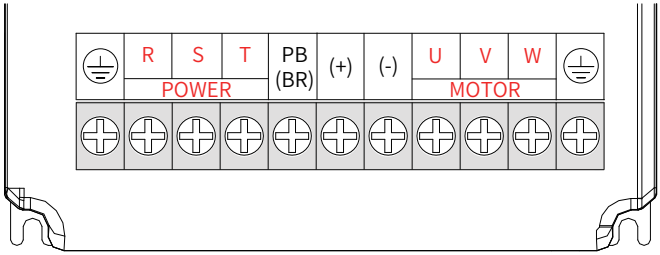


Figure 3-1 Main circuit terminal layout of three-phase drives

Table 3-1 Descriptions of main circuit terminals of three-phase drives

| Terminal Symbol | Name | Description |
|---|---|---|
| R, S, T | Three-phase power input terminals | Connected to the three-phase AC power supply. |
| (+), (-) | DC bus terminals | Used as the common DC bus input points. Connected to the external braking unit. |
| (+), PB (BR) | (Terminals for connecting the braking resistor) | Connected to the external braking resistor. |
| U, V, W | (Output terminals) | Connected to the spindle motor. Connect the drive to the motor in a correct phase sequence according to the motor cable labels. |
| ⏚ | Grounding terminal | Used to prevent EMC interference and reduce leakage current. The grounding terminal must be wired properly. |

## 3.1.2 Wiring

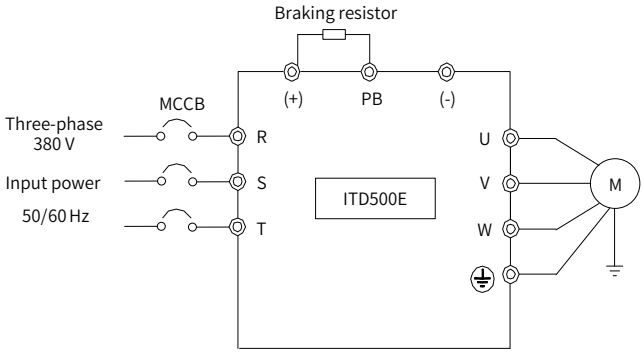


Figure 3-2 Wiring of the main circuit

Precautions during wiring:

■ Input power terminals R, S, and T

The cable connection on the input side of the drive requires no specific phase sequence.

■ DC bus terminals P(+), (-):

Residual voltage may be still present in DC bus terminals P(+) and (-) immediately after power-off. Wait for at least 10 min after the CHARGE indicator is off before wiring. Failure to comply may result in electric shock.

■ Power output terminals U, V, and W:

Do not connect a capacitor or surge protection device to the output side of the drive. Failure to comply may cause frequent faults or even damage the drive.

■ Grounding terminal PE

Ground the PE terminal properly. The resistance of the grounding cable must be less than 0.1 Ω. Failure to comply may cause malfunction or even damage the drive.

The grounding terminal (PE) of the drive and the neutral (N) terminal of the power supply cannot be used interchangeably.

The impedance of the protective earth conductor must be able to bear large short-circuit current that may occur upon fault.

## 3.2 Description and Wiring of Control Circuit Terminals

### 3.2.1 Description of Control Circuit Terminals

The control circuit terminal layout is shown below.

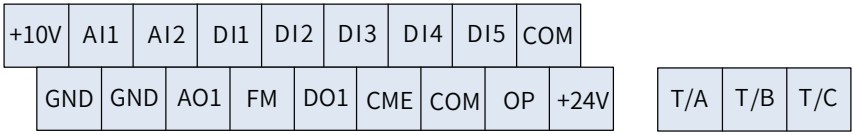


Figure 3-3 Control circuit terminal layout

Table 3-2 Description of control terminals

| Type | Terminal Symbol | Terminal Name | Description |
|---|---|---|---|
| Power supply | +10V-GND | +10 V power supply | Used to provide +10 V power supply.<br>Maximum output current: 10 mA<br>Generally used as the power supply for an external potentiometer of 1 kΩ to 5 kΩ. |
| | +24V-COM | +24 V power supply | Used to provide +24 V power supply.<br>Generally used as the power supply for DI/DO terminals and external sensors.<br>Max. output current: 200 mA |
| | OP | External power input terminal | Connected to +24 V by default.<br>To drive DI1 to DI5 through external signals, connect OP to an external power supply and disconnect OP from the +24 V power terminal. |
| Analog input (AI) | AI1-GND | AI1 | Input range: 0 VDC to 10 VDC<br>Input impedance: 22 kΩ |
| | AI2-GND | AI2 | 1) Input range: 0 VDC to 10 VDC/4 mA to 20 mA, determined by jumper J9 on the control board<br>2) Input impedance:<br>22 kΩ at voltage input<br>500 Ω at current input |
| Digital input (DI) | DI1-OP | DI1 | 1) Photocoupler isolation compatible with dual-polarity input<br>2) Input impedance: 2.4 kΩ<br>3) Voltage range upon active level input: 9 V to 30 V |
| | DI2-OP | DI2 | |
| | DI3-OP | DI3 | |
| | DI4-OP | DI4 | |
| | DI5-OP | High-speed pulse DI | The terminal DI5-OP, besides carrying the features of DI1 to DI4, can also be used as the channel for high-speed pulse input.<br>Maximum input frequency: 100 kHz |

## 3.2.2 Wiring

### 1 AI terminals

Weak analog voltage signals are susceptible to external interference. Therefore, shielded cables with length less than or equal to 20 m are required. In applications where analog signals suffer from severe interference, install a filter capacitor or ferrite core on the analog signal source side.

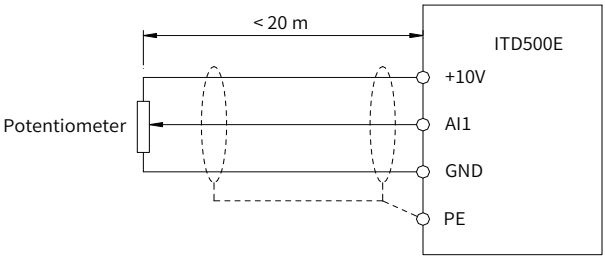


Figure 3-4 Wiring of AI terminals

### 2 DI terminals

The contact control mode is recommended. Shielded cables with length less than or equal to 20 m are required. Keep the wiring distance as short as possible. When the active mode is used for driving, necessary filtering measures shall be taken to prevent interference to the power supply. The recommended wiring mode for use of an active switch is as follows.

■ Wiring in SINK mode

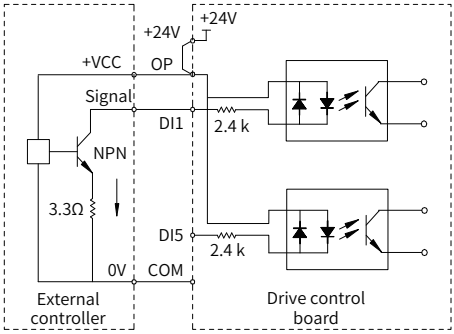


Figure 3-5 DI terminal wiring in SINK mode

This is the most commonly used wiring mode (default mode). OP is shorted to +24 V. To use the external power supply, disconnect J7 first. Then connect the positive electrode of the external 24 V power supply to OP and connect the negative electrode, after passing through the external controller, to the DI terminal.

NOTE

◆ In the SINK mode, DI terminals of different drives cannot be connected in parallel. Otherwise, malfunction may occur on the DI terminals. To connect DI terminals (among different drives) in parallel, connect a diode (IF > 40 mA, UF < 40 V) in serial at the DI terminal.

■ Wiring in SOURCE mode

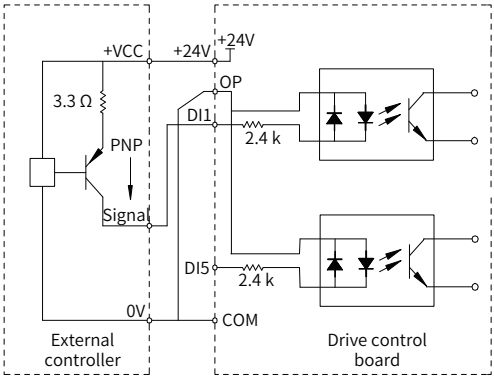


Figure 3-6 DI terminal wiring in SOURCE mode

The SOURCE mode requires the OP of J7 to be jumpered to COM and the +24 V terminal of the drive to pass through the external controller and be connected to the corresponding DI terminal. To use the external power supply, disconnect J7 first. Then connect the negative electrode of the external 24 V power supply to OP and connect the positive electrode, after passing through the external controller, to the DI terminal.

**3 Control signal output terminals**

■ DO terminals:

When the DO terminal is used to drive a relay, install a snubber diode on both sides of the relay coil. The driving capacity cannot exceed 50 mA. Otherwise, the 24 VDC power supply may be damaged.

NOTE

◆ Do not reverse the polarity of the snubber diode during installation, as shown in the following figure. Otherwise, the 24 VDC power supply will be damaged immediately once there is digital output.

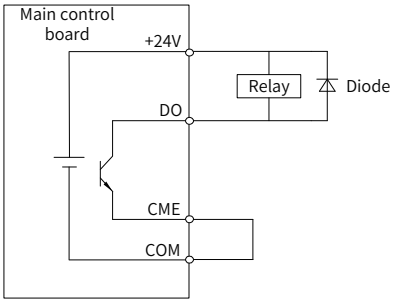


Figure 3-7 Wiring of DO terminals

## 3.3 System Wiring

■ System wiring in air jet mode

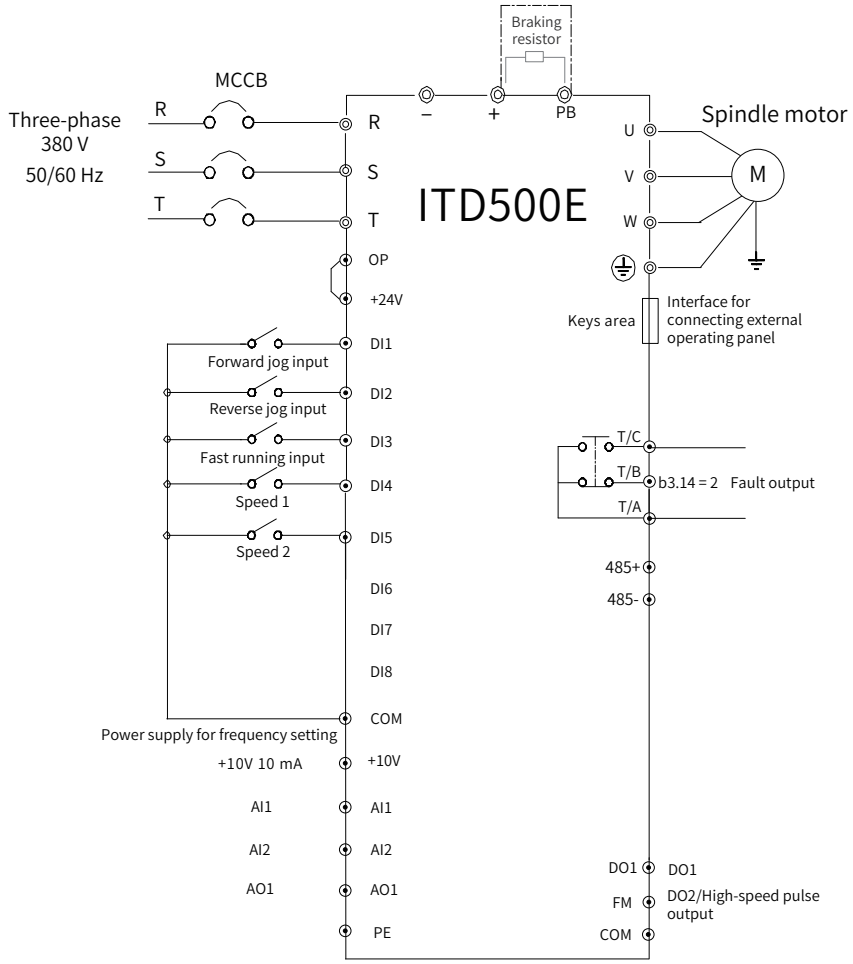


Figure 3-8 System wiring in air jet mode

NOTE

◆ The symbol " ◎ " represents the main circuit terminals. The symbol " ○ " represents the control circuit terminals.

■ System wiring in water jet mode

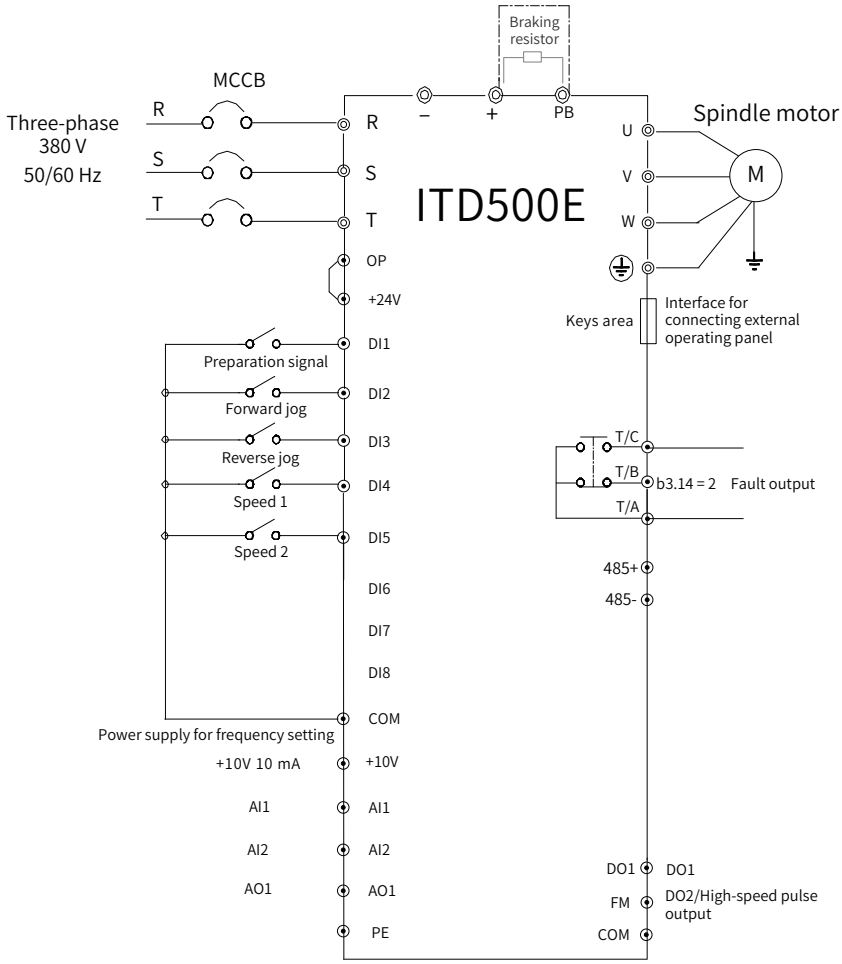


Figure 3-9 System wiring in water jet mode

NOTE

◆ The symbol " ◎ " represents the main circuit terminals. The symbol " ○ " represents the control circuit terminals.

# 4 Operating Panel

## 4.1 Introduction to the Operating Panel

You can modify parameters, monitor the working status and start/stop the drive through the operating panel. See the following figure for the appearance and function arrangement of the operating panel.

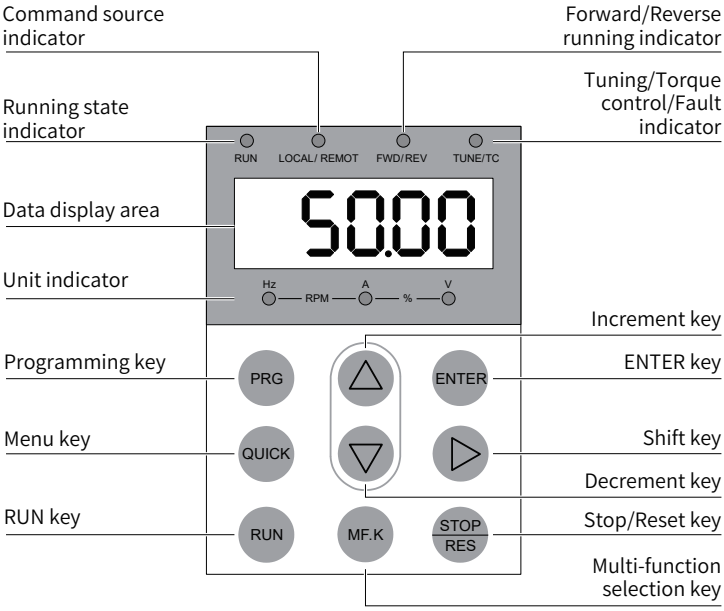


Figure 4-1 Operating panel

### 4.1.1 Indicators on the Operating Panel

In the following table,  indicates ON.  indicates OFF.  indicates flashing.

Table 4-1 Description of indicators

| Indicator Status | | Description |
|---|---|---|
| RUN Running state indicator |  RUN | OFF: Stop |
| |  RUN | ON: Running |

| Indicator Status | | Description |
|---|---|---|
| LOCAL/REMOT Command source indicator |  | OFF: Operating panel control |
| |  | ON: Terminal control |
| |  | Flashing: Communication control |
| FWD/REV Rotation direction indicator |  | OFF: Forward |
| |  | ON: Reverse |
| TUNE/TC Tuning/Torque control/Fault indicator |  | OFF: Normal run |
| |  | ON: Torque control |
| |  | Slow flashing: Tuning (flashing once per second) |
| |  | Quick flashing: Fault (flashing four times per second) |
|  | | Frequency unit: Hz |
| 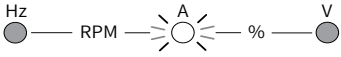 | | Current unit: A |
| 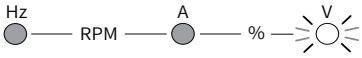 | | Voltage unit: V |
| 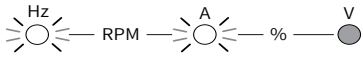 | | Speed unit: RPM |
|  | | Percentage: % |

FWD/REV: Indicates the rotation direction. Indicator ON indicates forward direction and OFF indicates reverse direction.

LOCAL/REMOT: Indicates the running state. Indicator OFF indicates operating panel control, ON indicates terminal control, and flashing indicates communication control.

| | |
|---|---|
| ○ LOCAL/REMOT: OFF | Operating panel control |
| ● LOCAL/REMOT: Solid ON | Terminal control |
| ◑ LOCAL/REMOT: Flashing | Communication control |

RUN: Indicates the running state. Indicator OFF indicates the stop state and ON indicates the running state.

TUNE/TC: Indicates the tuning state/super start state. Indicator ON indicates the super start state and slow flashing indicates the tuning state.

### 4.1.2 Display

There is a five-digit LED display on the operating panel. It displays the set frequency, output frequency, various monitoring data, and fault codes.

Table 4-2 LED display values

| Display | Value | Display | Value | Display | Value | Display | Value |
|---|---|---|---|---|---|---|---|
| 0 | 0 | 6 | 6 | C | C | N | N |
| 1 | 1 | 7 | 7 | c | c | P | P |
| 2 | 2 | 8 | 8 | d | D | r | R |
| 3 | 3 | 9 | 9 | E | E | T | T |
| 4 | 4 | A | A | F | F | U | U |
| 5 | 5, S | b | B | L | L | u | u |

Example:

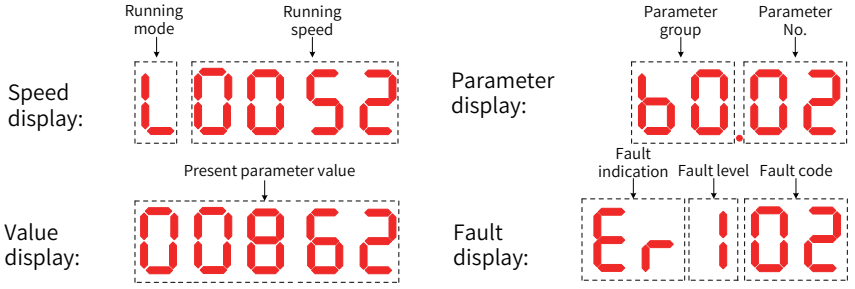


Figure 4-2 Example of LED display

### 4.1.3 Description of the Keys

Table 4-3 Description of the keys

| Key | Name | Function |
|---|---|---|
| PRG | Program | Used to enter or exit from the level 1 menu. |
| ENTER | ENTER | Used to enter each level of menu interface or confirm parameter settings. |
| △ | UP | Used to increase the value or parameter No.. |
| ▽ | DOWN | Used to decrease the value or parameter No.. |
| ▷ | SHIFT | Select the displayed parameters cyclically in the stop or running interfaces.<br>Used to select the digit to be modified when modifying a parameter value. |
| RUN | RUN | Used to start operations in the operating panel control mode. |
| STOP/RES | Stop/Reset | Used to stop a running drive or reset a fault. |
| MF.K | Multi-function selection | Reserved |
| QUICK | Menu | Used in cases where password input is needed. |

## 4.2 Parameter View and Setting

### 4.2.1 Parameter Setting

The operating panel displays three interfaces: Status display → Parameter No. → Parameter value.

The following figure shows the operation flow.

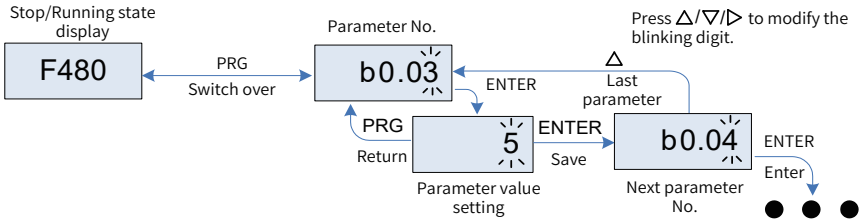


Figure 4-3 Flowchart for different interfaces

Here is an example of changing the value of b1.02 from 10.00 Hz to 15.00 Hz.

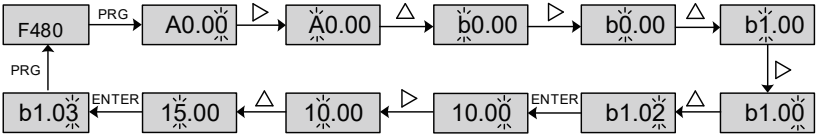


Figure 4-4 Example of parameter editing

In the parameter value interface, a parameter without blinking digit cannot be modified. The possible causes are as follows:

- This parameter is only readable, such as the monitoring parameters and running record parameters.
- This parameter can only be changed in the stop state.

### 4.2.2 Parameter View

In the stop or running state, you can press ▷ to display status parameters. In the running status, you can view the frequency reference, synchronization frequency output, output current, output voltage, and bus voltage.

- The operating panel displays the speed directly. The letter "F" displayed by the highest bit indicates fast speed. For example, F 560 indicates fast running at 560 RPM. The letter "L" displayed by the highest bit indicates low speed. For example, L 100 indicates slow jogging at 100 RPM.
- You can adjust the target speed in this mode. Increase the target speed of corresponding running state through △ or decrease the speed through ▽.
- Press ▷ to switch between fast speed and jogging speed interfaces. Press PRG to return to the original speed interface.

## 4.3 Password Lock

Password lock is used to prevent modifications on speed parameters.

- bF.00 ≠ 0: The setpoint is the speed protection password (for example, setpoint 1430 indicates the password is 1430).
- bF.00 = 0: No password protection is applied.
- bb.13 is used to lock/unlock the operating panel.
  bb.13 = 0: Speed cannot be modified through the operating panel
  bb.13 = 1: Speed can be modified through the operating panel

# 5 Quick Commissioning

## 5.1 Pre-commissioning Tasks

### 5.1.1 Installation of MX Series Spindle Motors

Install the spindle motor according to *"8 Installation and Use of MX Series Spindle Motors"* before commissioning.

### 5.1.2 Pre-commissioning Inspection

1) Check whether the spindle motor matches the drive.
2) Check whether cables are connected correctly.
3) Connect the control signals according to specifications. See details in *"3.2 Description and Wiring of Control Circuit Terminals"*.
4) Check the motor nameplate parameters before running.

| Para. No. | Meaning | Description | Default |
|---|---|---|---|
| A0.01 | Rated motor power | Indicates the rated motor power on the motor nameplate. | - |
| A0.02 | Rated motor voltage | Indicates the rated motor voltage on the motor nameplate. | Setpoint dependent on the motor wiring mode |
| A0.03 | Rated motor current | Indicates the rated motor current on the motor nameplate. | - |
| A0.04 | Rated motor frequency | Indicates the rated motor frequency on the motor nameplate. | - |
| A0.05 | Rated motor speed | Indicates the rated motor speed on the motor nameplate. | - |

NOTE

◆ These parameters need no setting when the ITD500E series drive is working with a MX series spindle motor, but you need to check whether these parameter values are consistent with the motor nameplate.

## 5.2 Quick Commissioning Process/Guide

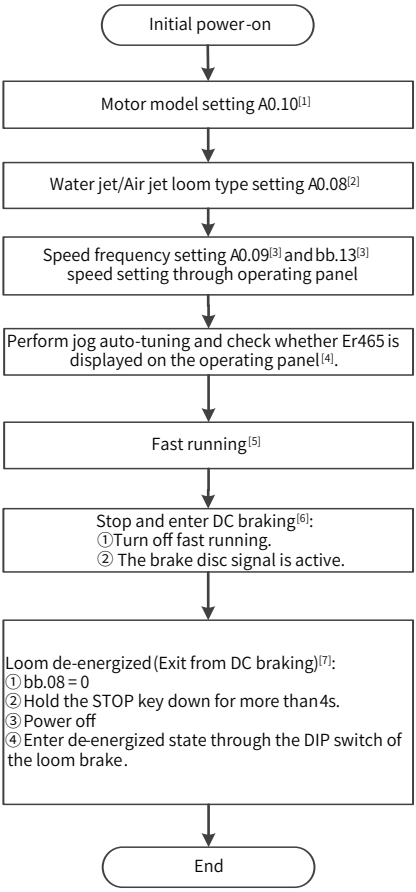


Figure 5-1 Quick commissioning process

[1] When the motor power is 3.7 kW, set A0.10 to 0. When the motor power is 4.5 kW, set A0.10 to 1.

[2] For use in the air jet loom, set A0.08 to 3. For use in the water jet loom, set A0.08 to 5.

[3] The default value of A0.09 is 1, which is the speed reference mode.

NOTE

- Set bb.13 to 0 when the ITD500E series drive (external type) is working with an electronic control system under other brands.
- After parameter setting, check whether the drive cable connections and the mechanical structure (see *"8 Installation and Use of MX Series Spindle Motors"* for details) are in proper condition.

[4] Perform jog auto-tuning to see whether the drive reports Er465. If yes, see "7 Troubleshooting" for details.

[5] Perform fast running to check
a) Whether the starting performance is proper.
b) Whether the speed fluctuation is proper.
c) Whether there are marks on the cloth.
d) Whether over-turn occurs on the loom during stop.
Perform jogging at any angle to check whether slip occurs.

[6] For the ITD500E series drive (external type) working with an electronic system under other brands, DC braking can be applied through the brake disc signal of the control cabinet or the STOP key on the operating panel.

[7] De-energized state (exit from DC braking) of the loom:
a) Set bb.08 to 0.
b) Hold down the STOP key for above 4s.
c) Power off.
d) Enter de-energized state through the brake DIP switch of the loom.

## 5.3 Air Jet Mode (A0.08 = 3)

■ Related Parameters

| No. | Name | Description |
|---|---|---|
| A0.08 | Loom type | 3: Air jet mode |
| bF.04 | Drive command source | 1: Terminal |
| b3.00 | Frequency source | 0: Multi-speed reference |
| b3.01 | DI1 function | 17: Forward jog signal |
| b3.02 | DI2 function | 18: Reverse jog signal |
| b3.03 | DI3 function | 1: Fast running signal |
| b3.04 | DI4 function | 8: Multi-speed 1 |
| b3.05 | DI5 function | 9: Multi-speed 2 |
| A1.10 | Jog speed | Drive speed during jogging |
| A1.02–A1.09 | Fast running speed | Drive speed during fast running |

■ System connection

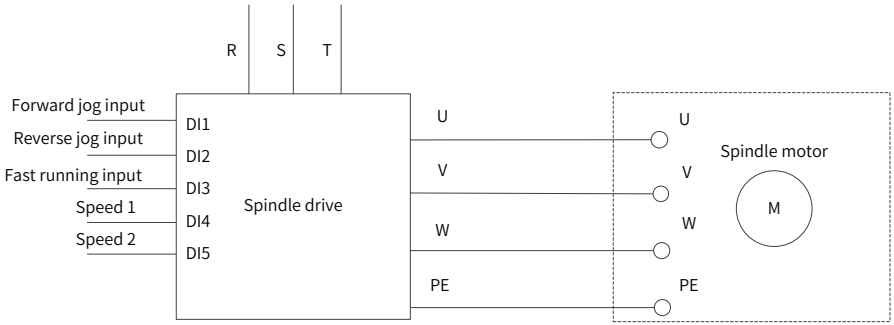

The peripheral controller selects the running speed needed through multi-speed references.

The drive performs forward jogging when DI1 is active.

The drive performs reverse jogging when DI2 is active.

The drive performs forward fast running when DI3 is active.

## 5.4 Water Jet Mode (A0.08 = 5)

■ Related Parameters

| No. | Name | Description |
|---|---|---|
| A0.08 | Loom type | 5: 2nd generation of water jet mode |
| bF.04 | Drive command source | 1: Terminal |
| b3.00 | Frequency source | 0: Multi-speed reference |
| b3.01 | DI1 function | 11: Ready signal |
| b3.02 | DI2 function | 17: Forward jog |
| b3.03 | DI3 function | 18: Reverse jog |
| b3.09 | DI9 selection | 6: Brake disc signal |
| A1.10 | Jog speed | Drive speed during jogging |
| A1.02–A1.09 | Fast running speed | Drive speed during fast running |

■ System connection

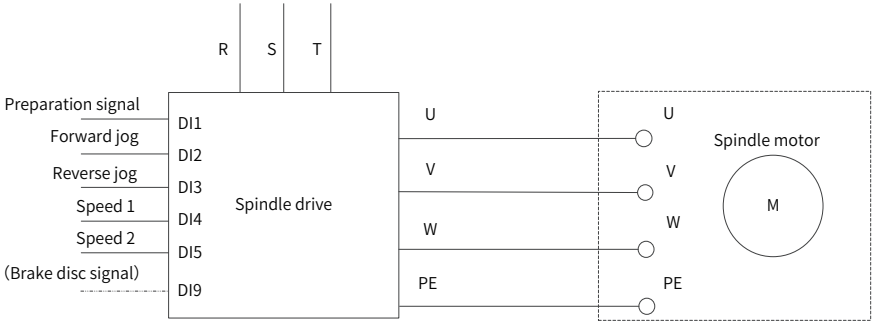


The drive performs forward jogging when DI2 is active.

The drive performs reverse jogging when DI3 is active.

The jogging frequency is defined by A1.10. The drive performs fast running if DI2 is activated after DI1 is activated.

When the drive (external type) is working with an electronic control system under other brands, the DI9 brake disc signal must be added.

# 6 Parameters

## 6.1 DI Function Parameter Settings

| Parameter No. | Meaning |
|---|---|
| b3.01 | DI1 function selection |
| b3.02 | DI2 function selection |
| b3.03 | DI3 function selection |
| b3.04 | DI4 function selection |
| b3.05 | DI5 function selection |
| b3.06 | DI6 function selection |
| b3.07 | DI7 function selection |
| b3.08 | DI8 function selection |
| b3.09 | DI9 function selection |

## 6.2 DI Multi-Speed Function Settings

| Parameter No. | Meaning | Description |
|---|---|---|
| A1.02 | Speed 1 | Multi-speed functions are determined by DI terminals 8, 9, and 10. The eight speeds are executed by numeric combination of the following three DI terminals. |
| A1.03 | Speed 2 | |
| A1.04 | Speed 3 | |
| A1.05 | Speed 4 | |
| A1.06 | Speed 5 | |
| A1.07 | Speed 6 | |
| A1.08 | Speed 7 | |
| A1.09 | Speed 8 | |

| DI6 | DI5 | DI4 | Target Speed |
|---|---|---|---|
| De-activated | De-activated | De-activated | A1.02 |
| De-activated | De-activated | Activated | A1.03 |
| De-activated | Activated | De-activated | A1.04 |
| De-activated | Activated | Activated | A1.05 |
| Activated | De-activated | De-activated | A1.06 |
| Activated | De-activated | Activated | A1.07 |
| Activated | Activated | De-activated | A1.08 |
| Activated | Activated | Activated | A1.09 |

## 6.3 Group A: Basic Parameters

NOTE

- 4.5 kW: The drive works with a spindle motor of 4.5 kW.
- 3.7 kW: The drive works with a spindle motor of 3.7 kW.

| Para. No. | Name | 4.5 kW[1] Default | 3.7 kW[2] Default | Description | Setting Condition |
|---|---|---|---|---|---|
| A0.00 | Motor type | 2 | | 1: Asynchronous motor<br>2: Synchronous motor | Read-only<br>Cannot be restored to default value |

| Para. No. | Name | 4.5 kW[1] Default | 3.7 kW[2] Default | Description | Setting Condition |
|---|---|---|---|---|---|
| A0.01 | Rated power | 4.5 | 3.7 | 0.4 kW to 1000.0 kW | Non-modifiable during running<br>Cannot be restored to default value |
| A0.02 | Rated voltage | 380 | | 4 V to 2000 V | Non-modifiable during running<br>Cannot be restored to default value |
| A0.03 | Rated current | 8.40 | 9.00 | 1 A to 65535 A | Non-modifiable during running<br>Cannot be restored to default value |
| A0.04 | Rated frequency | 140.00 | 133.33 | Lower limit: 1 Hz<br>Upper limit: b1.02 | Non-modifiable during running<br>Cannot be restored to default value |
| A0.05 | Rated speed | 600 | 800 | 0 r/min to 6000 r/min | Non-modifiable during running<br>Cannot be restored to default value |
| A0.08 | Loom type | 0 | | 0 to 6<br>3: Air jet<br>5: Water jet | Non-modifiable during running |
| A0.09 | Speed/ Frequency mode | 1 | | 0 to 1<br>0: Frequency mode, jogging defined by b9.00, fast running defined by b5.00<br>1: Speed mode, jogging defined by A1.10, fast running defined by A1.02 | Non-modifiable during running |
| A0.10 | Spindle motor type | 1 | 0 | 0 to 1<br>0: Spindle motor of 3.7 kW<br>1: Spindle motor of 4.5 kW<br>When this parameter changes, other related parameters will change as well. See the related parameter table for details. | Non-modifiable during running |
| A1.02–A1.09 | Fast running speeds 1–8 | 480 | | 0 r/min to 1200 r/min | Modifiable during running |
| A1.10 | Slow running speed | 90 | | 0 r/min to 600 r/min | Modifiable during running |

| Para. No. | Name | 4.5 kW[1] Default | 3.7 kW[2] Default | Description | Setting Condition |
|---|---|---|---|---|---|
| A1.11 | Weft stop acceleration time | 0.09 | | 0s to 60.00s<br>When the weft stop DI function is activated, the acceleration time is defined by A1.11 and the deceleration time is defined by b4.01, When the DI is de-activated, the acceleration time is defined by b4.00 and the deceleration time is defined by b4.01. | Modifiable during running |
| AF.00 | Level 1 password | 0 | | 0 to 65535 | Modifiable during running<br>Cannot be restored to default value |
| AF.01 | Restore parameters in level 1 menu | 0 | | 0 to 1 | Non-modifiable during running |
| AF.02 | Level 1 menu check | 0 | | 0 to 1 | Non-modifiable during running |

## 6.4 Group B: Control Parameters

NOTE

- 4.5 kW: The drive works with a spindle motor of 4.5 kW.
- 3.7 kW: The drive works with a spindle motor of 3.7 kW.

| Para. No. | Name | 4.5 kW[1] Default | 3.7 kW[2] Default | Description | Setting Condition |
|---|---|---|---|---|---|
| b0.04 | Auto-tuning selection | 0 | | 0 to 13<br>00: No operation<br>11: Static auto-tuning of synchronization motor<br>12: Complete auto-tuning of synchronous motor | Non-modifiable during running |
| b1.00 | Control mode | 1 | | 0 to 2<br>0: Open loop<br>1: Closed loop<br>2: V/f | Non-modifiable during running |

| Para. No. | Name | 4.5 kW[1] Default | 3.7 kW[2] Default | Description | Setting Condition |
|---|---|---|---|---|---|
| b1.01 | Slip compensation | 100 | | 50 to 200<br>Used to adjust the motor speed stability accuracy in SVC mode. Increase the value of b1.01 during low speed at heavy load, or decrease this value during high speed at light load. In FVC mode, b1.01 is used to adjust the drive output current under the same load. | Non-modifiable during running |
| b1.04–b1.06 | Torque limit | 60.0 | | 0 to 500.0 | Non-modifiable during running |
| b1.02 | Maximum frequency | 200.00 | | 50.00 Hz to 600.00 Hz | Non-modifiable during running |
| b2.00 | Encoder resolution | 360 | | 0 to 8192 | Non-modifiable during running<br>Cannot be restored to default value |
| b2.01 | Encoder type | 0 | | 0 to 4<br>0: ABZ incremental encoder<br>1: UVW incremental encoder<br>2: Resolver<br>3: Sine/Cosine encoder<br>4: Wire-saving UVW encoder | Non-modifiable during running<br>Cannot be restored to default value |
| b2.02 | Phase sequence of ABZ incremental encoder | 0 | | 0 to 1<br>Obtained from auto-tuning | Non-modifiable during running<br>Cannot be restored to default value |
| b2.03 | Encoder disconnection detection | 1 | | 0 to 1<br>Used to enable the No. 20 fault (Encoder disconnection detection).<br>0: Hide No. 20 fault<br>1: Not hide No. 20 fault | Non-modifiable during running |
| b2.10 | Speed measurement transmission ratio | 1000 | | 0 to 65535 | - |

| Para. No. | Name | 4.5 kW[1] Default | 3.7 kW[2] Default | Description | Setting Condition |
|---|---|---|---|---|---|
| b3.00 | Frequency source B | 0 | | 0 to 8<br>0: Multi-speed<br>1: AI1 (voltage)<br>2: AI2 (voltage or current)<br>3: AI3 reserved (voltage)<br>4: Acceleration/Deceleration<br>5: Communication<br>6: High-speed pulse (active only in DI5) | Non-modifiable during running |
| b3.01–b3.10 | DI configuration | A0.08 = 3:<br>b3.01 = 17<br>b3.02 = 18<br>b3.03 = 1<br>b3.04 = 8<br>b3.05 = 9<br>A0.08 = 5:<br>b3.01 = 11<br>b3.02 = 17<br>b3.03 = 18<br>b3.04 = 8<br>b3.05 = 9<br>When the drive (external type) is working with an electronic control system under other brands, set b3.09 to 6. | | 0 to 139<br>11: Ready signal<br>17: Forward jog<br>18: Reverse jog<br>1: Forward fast running<br>6: Brake signal<br>14: Brake disc disengage signal<br>8: Multi-speed<br>29: Warp stop | Non-modifiable during running |
| b3.14 | Relay 1 function selection | 2 | | 2: Stop upon fault<br>Activated when a level 1 fault occurs. | - |
| b3.15 | Relay 2 output selection | 13 | | 13: Motor fan control<br>Activated after the drive starts running; deactivated when the drive stops running and the time defined by bF.21 elapses. | - |
| b3.16 | DO1 function selection | 2 | | 2: Stop upon fault<br>Activated when a level 1, 2, or 3 fault occurs. | - |

| Para. No. | Name | 4.5 kW[1] Default | 3.7 kW[2] Default | Description | Setting Condition |
|---|---|---|---|---|---|
| b3.17 | DO2 function selection | 4 | | 4: Fault reminder<br>Activated when a level 3 or level 4 fault occurs. | - |
| b3.47 | DI rising-edge filter time | 0.010 | | 0s to 1.000s | Non-modifiable during running |
| b3.48 | DI falling edge filter time | 0.002 | | 0s to 1.000s | Non-modifiable during running |
| b4.00 | Acceleration time | 0.09 | | 0s to 60.00s | Modifiable during running |
| b4.01 | Deceleration time | 0.09 | | 0s to 60.00s | Modifiable during running |
| b5.00–b5.07 | Multi-speed | 50.00 | | Unit: Hz<br>Lower limit: b1.03<br>Upper limit: b1.02 | Modifiable during running |
| b6.11 | Stop frequency | 1.5 | | Unit: Hz<br>Lower limit: b1.03<br>Upper limit: A0.04 | Non-modifiable during running |
| b6.13 | DC braking current | 100 | | 0 to 600 | Non-modifiable during running |
| b6.18 | DC braking time 1 | 15 | 30 | 0s to 65535s | Modifiable during running<br>Cannot be restored to default value |
| b6.19 | DC braking current 1 | 160 | 270 | 0 to 600 | Non-modifiable during running<br>Cannot be restored to default value |
| b6.20 | DC braking time 2 | 15 | 30 | 0s to 65535s | Modifiable during running<br>Cannot be restored to default value |
| b6.21 | DC braking current 2 | 130 | 250 | 0 to 600 | Non-modifiable during running<br>Cannot be restored to default value |

| Para. No. | Name | 4.5 kW[1] Default | 3.7 kW[2] Default | Description | Setting Condition |
|---|---|---|---|---|---|
| b9.00 | Jog frequency | 21.00 | 15.00 | 0 Hz to 80.00 Hz | Modifiable during running Cannot be restored to default value |
| b9.01 | Acceleration time of jogging | 0.50 | | 0.01s to 10.00s | Non-modifiable during running |
| b9.02 | Deceleration time of jogging | 0.50 | | 0.01s to 10.00s | Non-modifiable during running |
| b9.03 | Timeout duration of jog auto-tuning | 0.600 | | 0s to 2.000s | Non-modifiable during running |
| b9.04 | Jog control mode | 0 | | 0 to 2<br>0: Open loop<br>1: Closed loop | Non-modifiable during running |
| b9.05 | Minimum delay of jogging | 0.500 | | 0s to 2.000s | Non-modifiable during running |
| bb.00 | Speed loop proportion during deceleration | 15 | | 0 to 65535 | Modifiable during running |
| bb.04 | Torque integral feedforward Kp1 | 15 | | 0 to 65535 | Modifiable during running |
| bb.08 | DC braking switch | 0 | | 0 to 1<br>0: Exit from DC braking<br>1: Keep DC braking | Non-modifiable during running |
| bb.13 | UP/DOWN key selection | 1 | | 0 to 1<br>0: Unlocked<br>1: Locked | Modifiable during running |
| bC.00 | Super start enable bit | 1 | | 0: Disable<br>1: Enable | Non-modifiable during running |
| bC.15 | AB phase sequence auto-tuning selection | 1 | | 0: Disable<br>1: Enable | Modifiable during running |

| Para. No. | Name | 4.5 kW[1] Default | 3.7 kW[2] Default | Description | Setting Condition |
|---|---|---|---|---|---|
| bC.16 | Magnetic pole position auto-tuning selection (fast running) | 0 | | 0–2:<br>0: Performed each time upon fast running<br>1: Disable<br>2: Performed upon initial fast running | Modifiable during running |
| bd.00 | Baud rate | 5008 | | 5 to 9999<br>Ones: RS485 communication baud rate<br>5: 9600 bps<br>8: 57600 bps | Modifiable during running |
| bd.01 | Data format | 3 | | 0 to 3<br>0: No parity check <8, N, 2><br>1: Even parity <8, E, 1><br>2: Odd parity <8, O, 1><br>3: No parity check <8, N, 1> | Non-modifiable during running |
| bd.02 | Local address | 8 | | 0 to 247 | Non-modifiable during running |
| bd.07 | Extension card selection | 0 | | 0 to 2<br>0: Modbus Communication | Non-modifiable during running |
| bE.00 | Motor overload protection | 1 | | 0 to 1<br>The setpoint 0 indicates motor overload protection is disabled, which may result in motor damage due to overheat.<br>The setpoint 1 indicates motor overload protection is enabled based on the inverse time curve as follows: 220% x (bE.01) x Rated motor current (If the load stays in this value for 1 min, the drive reports motor overload fault.); or 150% x (bE.01) x Rated motor current (If the load stays in this value for 60 min, the drive reports motor overload fault.)<br>Note: Set bE.01 to a proper value based on the actual motor overload capacity. A too large setpoint may easily result in motor damage caused by overheat without alarm. | Non-modifiable during running |

| Para. No. | Name | 4.5 kW[1] Default | 3.7 kW[2] Default | Description | Setting Condition |
|---|---|---|---|---|---|
| bE.01 | Overload curve protection gain | 0.90 | 1.10 | 0.20 to 1.10 | Cannot be restored to default value |
| bE.02 | Overload pre-warning coefficient | 80 | | 50 to 100<br>Used to send a pre-warning signal to the control system through a DO terminal before motor overload fault protection applies. It defines the threshold for triggering motor overload pre-warning. The larger the setpoint, the slower will the pre-warning be triggered.<br>When the accumulative current output of the drive exceeds the result of the overload inverse time curve multiplied by bE.02, the output function 9 (Motor overload pre-warning) will be activated. | Non-modifiable during running |
| bE.07 | Protection against short-to-ground | 1 | | 0 to 1<br>Used to detect whether the motor is short circuited to the ground when the drive is powered on. If this function is enabled, there will be voltage output in the UVW terminals of the drive within a limited duration after power-on. | Non-modifiable during running |
| bE.08 | Input phase loss protection | 1 | | 0 to 2<br>Used to set the input phase loss protection.<br>0: Disabled<br>1: Enable hardware input phase loss protection<br>2: Enable hardware and software input phase loss protection | Non-modifiable during running |
| bE.09 | Output phase loss protection | 0 | | 0 to 1<br>0: Disabled<br>1: Enabled | Non-modifiable during running |

| Para. No. | Name | 4.5 kW[1] Default | 3.7 kW[2] Default | Description | Setting Condition |
|---|---|---|---|---|---|
| bE.10 | Brake usage | 100 | | 0 to 100 | Non-modifiable during running |
| bE.11 | Pre-running short-to-ground detection flag bit | 0 | | 0 to 1 | Non-modifiable during running |
| bE.16 | Braking voltage | 680.0 | | 580.0 V to 800.0 V | Non-modifiable during running |
| bE.17 | Pre-charge resistor fault detection | 1 | | 0 to 1 | Non-modifiable during running |
| bE.19 | Pre-running output phase loss protection | 0 | | 0 to 1 | Non-modifiable during running |
| bE.20 | Master-slave mode selection | 0 | | 0 to 1 | Non-modifiable during running |
| bF.00 | Level 2 menu password | 0 | | 0 to 65535 | Modifiable during running |
| bF.01 | Restore Level 2 menu to default settings | 0 | | 0 to 2 | Non-modifiable during running |
| bF.02 | Level 2 menu user | 0 | | 0 to 1 | Non-modifiable during running |
| bF.04 | Command source | 0 | | 0 to 2<br>0: Operating panel (LOCAL/REMOT indicator turned off)<br>1: Terminal (LOCAL/REMOT indicator turned on)<br>2: Communication (LOCAL/REMOT indicator blinking) | Non-modifiable during running |
| bF.05 | Operating panel running frequency | 8.00 | | b1.02–b1.03 | Modifiable during running |
| bF.06 | Running direction | 0 | | 0 to 1 | Modifiable during running |
| bF.07 | FDT frequency detection value | 50.0 | | b1.02–b1.03 | Modifiable during running |

| Para. No. | Name | 4.5 kW[1] Default | 3.7 kW[2] Default | Description | Setting Condition |
|---|---|---|---|---|---|
| bF.08 | Frequency detection hysteresis value | 5.0 | | 0 to 100.0 | Modifiable during running |
| bF.09 | Cooling fan control | 0 | | 0 to 1 | Non-modifiable during running |
| bF.10 | Fault protection action 1 | 14153 | | 11111 to 55555<br>Defines the fault level of No. 41 to No. 45 faults. | Non-modifiable during running |
| bF.11 | Fault protection action 2 | 11111 | | 11111 to 55555<br>Defines the fault level of No. 46 to No. 50 faults. | Non-modifiable during running |
| bF.12 | Fault protection action 3 | 13111 | | 11111 to 55555<br>Defines the fault level of No. 51 to No. 55 faults. | Non-modifiable during running |
| bF.13 | Fault protection action 4 | 11111 | | 11111 to 55555<br>Defines the fault level of No. 56 to No. 60 faults. | Non-modifiable during running |
| bF.14 | Fault protection action 5 | 11111 | | 11111 to 55555<br>Defines the fault level of No. 61 to No. 65 faults. | Non-modifiable during running |
| bF.19 | Commissioning mode | 0 | | 0 to 1 | Non-modifiable during running |
| bF.21 | Motor fan control | 30 | | 0 to 3000 | Non-modifiable during running |
| bF.24 | EEPROM protection | 0 | | 0 to 1<br>0: Enable<br>1: Disable | Non-modifiable during running |

## 6.5 Group U: Monitoring Parameters

NOTE

- 4.5 kW: The drive works with a spindle motor of 4.5 kW.
- 3.7 kW: The drive works with a spindle motor of 3.7 kW.

| Para. No. | Name | 4.5 kW[1] Default | 3.7 kW[2] Default | Description | Setting Condition |
|---|---|---|---|---|---|
| U0.00 | Running frequency | - | - | - | Read-only |
| U0.01 | Feedback frequency | - | - | - | Read-only |
| U0.02 | Target frequency | - | - | - | Read-only |
| U0.07 | Bus voltage | - | - | - | Read-only |
| U0.10 | DI status | - | - | - | Read-only |

| Para. No. | Name | 4.5 kW[1] Default | 3.7 kW[2] Default | Description | Setting Condition |
|---|---|---|---|---|---|
| U0.28 | Fault code | - | - | - | Read-only |
| U0.30 | Function running procedure | - | - | - | Read-only |
| U0.31 | Process running procedure | - | - | - | Read-only |
| U0.32 | Control mode for performance activation | - | - | - | Read-only |
| U0.33 | DC braking current | - | - | - | Read-only |

# 7 Troubleshooting

## 7.1 Solutions to Performance Faults

| Fault Code | Description | Cause | Solution |
|---|---|---|---|
| Er102-Er104 | Overcurrent | 1. The drive output circuit is grounded or short circuited.<br>2. Parameter auto-tuning is not performed in vector control mode.<br>4. The customized torque boost or the V/f curve is improper.<br>5. The voltage is too low.<br>6. The motor being started is already rotating.<br>7. A sudden load is applied during acceleration. | 1. Eliminate external faults.<br>2. Check whether motor parameters are set correctly.<br>3. Increase the acceleration time.<br>4. Reduce the overcurrent suppression threshold (bE.06) |
| Er105–Er107 | Overvoltage | 1. The input voltage is too high.<br>2. An external force drives the motor during running.<br>3. The acceleration time is too short.<br>4. The deceleration time is too short. | 1. Eliminate external faults.<br>2. Increase the acceleration time.<br>3. Increase the deceleration time.<br>4. Check whether the voltage input to R/S/T terminals is too high.<br>5. Check whether overvoltage suppression (F4.58) is enabled (1: Enable; 0: Disable).<br>6. If Er107 is reported during running, reduce the overvoltage suppression threshold (F4.50) and increase the overvoltage suppression proportional gain (F4.51) and integral gain (F4.63) properly. |
| Er109 | Undervoltage | 1. Instantaneous power failure occurs.<br>2. The voltage input to the drive is outside the allowable range.<br>3. The rectifier bridge and pre-charge resistor are faulty.<br>4. The drive board is faulty.<br>5. The control board is faulty. | 1. Eliminate external faults.<br>2. Ask for technical support. |
| Er110 | Drive overload | The load is too heavy or locked-rotor occurs on the motor. | Reduce the load and check the motor and mechanical conditions. |

| Fault Code | Description | Cause | Solution |
|---|---|---|---|
| Er111 | Motor overload | 1. The motor protection parameter (bE.01) is set improperly.<br>2. Check whether the load is too heavy or locked-rotor occurs on the motor.<br>3. The power rating of the motor is too low. | 1. Set bE.01 to a proper value.<br>2. Reduce the load and check the motor and mechanical conditions.<br>3. Select a motor of a higher power rating. |
| Er112 | Input phase loss | 1. The three-phase input power supply is abnormal.<br>2. The drive board is faulty.<br>3. The lightning protection board is abnormal.<br>4. The main control board is abnormal. | 1. Check and eliminate problems in the peripheral circuits.<br>2. Ask for technical support. |
| Er114 | Inverter module over-temperature | 1. The ambient temperature is too high.<br>2. The air filter is blocked.<br>3. The fan is damaged.<br>4. The thermistor is damaged.<br>5. The inverter module is faulty. | 1. Lower down the ambient temperature.<br>2. Clean the air filter.<br>3. Replace the fan.<br>4. Replace the drive |
| Er117 | Contactor fault | 1. The drive board and power supply are abnormal.<br>2. The contactor is faulty. | 1. Replace the drive<br>2. Replace the contactor. |
| Er118 | Current detection fault | 1. The hall device is abnormal.<br>2. The drive board is faulty. | Replace the servo drive. |
| Er120 | Speed measurement error during running | 1. Pulse loss occurs on the encoder during running.<br>2. The encoder gear backlash is too large, causing runaway or stop due to excessive angle deviation. | 1. Check encoder cable connections.<br>2. Ask for technical support. |
| Er123 | Short-to-ground | 1. The motor is short circuited to ground. | 1. Replace the cable or motor. |
| Er125 | Output phase loss | 1. The cables connecting the drive and the motor are abnormal.<br>2. The three-phase output of the drive is unbalanced during motor running.<br>3. The drive board is faulty.<br>4. The inverter module is faulty. | 1. Remove external faults.<br>2. Check whether the motor three-phase winding is normal.<br>3. Ask for technical support.<br>4. Ask for technical support. |

| Fault Code | Description | Cause | Solution |
|---|---|---|---|
| Er140 | Pulse-by-pulse current limit fault | The load is too heavy or locked-rotor occurs on the motor. | 1. Reduce the load and check the motor and mechanical conditions.<br>2. Check whether the motor three-phase winding is normal.<br>3. Ask for technical support. |
| Er465 | AB phase sequence auto-tuning error during jogging | 1. The encoder wiring is incorrect.<br>2. The encoder is faulty.<br>3. A wrong encoder phase sequence is detected during phase sequence auto-tuning during jogging. | 1. Check whether the jumper cap of the encoder PG card is proper (OC signal connected to 15 V and differential signal connected to 5 V).<br>2. Check whether phases A/B/Z of the encoder are connected improperly or loosened.<br>3. Check whether the flat cable connecting the PG card to the control board is loosened.<br>4. Set bC.15 to 1 after connections are done and perform jog auto-tuning. |

## 7.2 Solutions for Functional Faults

| Fault Code | Description | Cause | Solution |
|---|---|---|---|
| Er345 | Abnormal DI signal detected upon power-on. | The buttons (forward jog, reverse jog, and fast running) are not zeroed out before power-on. | Check whether the buttons and cable connections are correct. |
| Er148 | SPI communication fault | 1. The host controller operates improperly.<br>2. The communication cable is faulty.<br>3. The communication parameters are set improperly. | 1. Check the wiring of the host controller.<br>2. Check the communication cables.<br>3. Check the communication parameters. |
| Er149 | Parameter read-write error | The EEPROM chip is damaged. | Replace the main control board. |
| Er151 | Parameter fault | 1. Parameters are set improperly.<br>2. The EEPROM is damaged. | 1. Check the faulty parameters through parameter auto-inspection.<br>2. Replace the control board. |

# 8 Installation and Use of MX Series Spindle Motors

The MX series electric spindle motor is the first permanent magnetic spindle motor comprised of independent stator and rotor in the market. As a spindle motor designed especially for machineries in the textile industry, the MX series spindle motor can be installed onto a new loom directly or used for retrofitting an existing loom without changing the loom mechanical structure. The MX series spindle motor is designed to work with Inovance TAJ200 series air jet loom control cabinets, TWJ200 series water jet loom control cabinets, TWJ300 series water jet loom control cabinets or ITD500E series drives to form an energy-saving loom spindle beating system featuring high efficiency, high performance, easy installation, simple maintenance, and stepless speed regulation.



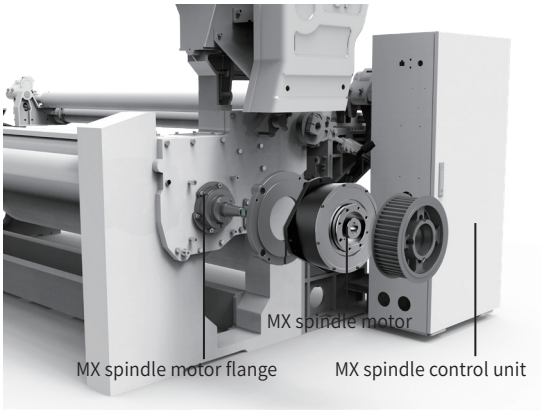


## Configurations:

TAJ200-Q5 integrated electronic control system for large-scale air jet loom + MX series spindle motor

TWJ300-A6 integrated electronic control system for water jet loom + MX series spindle motor

TWJ200-A3 integrated electronic control system for water jet loom + MX series spindle motor

ITD500E series drive + MX series spindle motor

NOTE

- This chapter describes the installation methods and instructions for use of the spindle motor. Read through this chapter before installing and operating the spindle motor.
- The colored section in the figures are for layer differentiation only. The actual color is subject to the physical product.

■ Comparison between conventional asynchronous motor solution and the new spindle motor solution

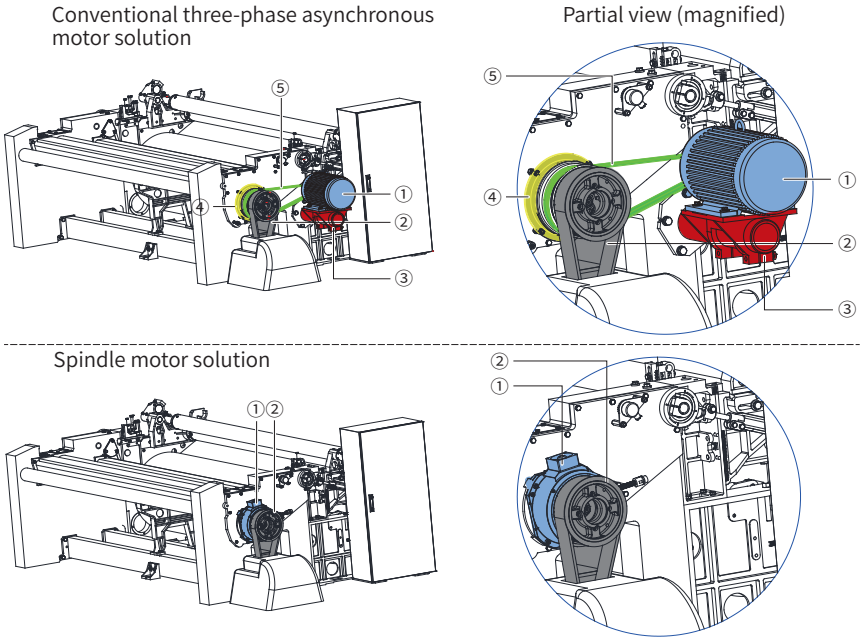


Figure 8-4 Comparison between conventional asynchronous motor solution and the new spindle motor solution

| No. | Spindle Motor Solution | Conventional Three-Phase Asynchronous Motor Solution |
|---|---|---|
| 1 | Spindle motor | Three-phase asynchronous motor |
| 2 | Shedding mechanism with pulley | Shedding mechanism with pulley |
| 3 | - | Three-phase asynchronous motor bracket |
| 4 | - | Brake |
| 5 | - | Motor transmission belt/belt pulley |

NOTE

◆ Whether to install the pulley for the shedding mechanism depends on actual applications. Absence of the pulley does not affect device operations.

# 8.1 Product Information

## 8.1.1 Product Nameplate

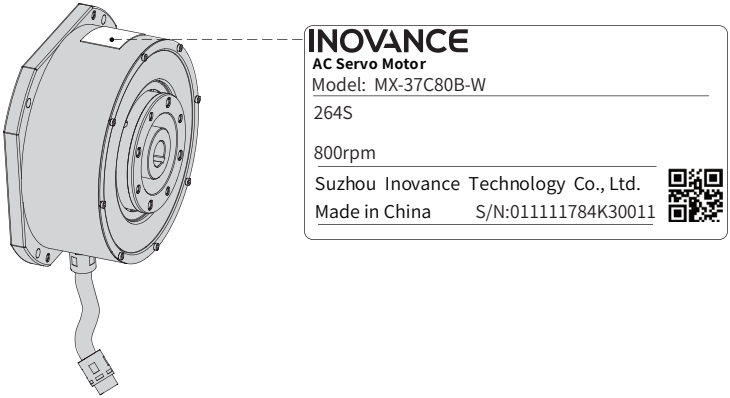


Figure 8-5 Nameplate

## 8.1.2 Components

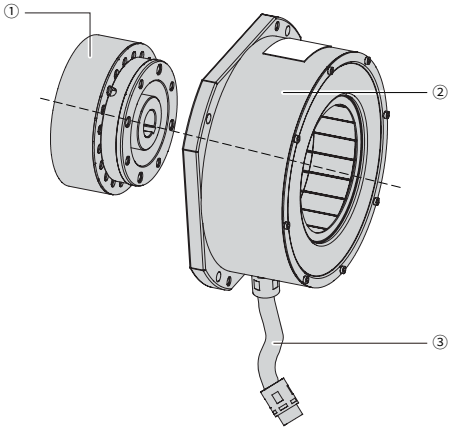


Figure 8-6 Outline drawing

Table 8-2 Description of components

| No. | Name | Remarks |
|---|---|---|
| 1 | Motor rotor | The stator and the rotor are well assembled before delivery to allow direct installation, removing the need for separation. |
| 2 | Motor stator | The stator and the rotor are well assembled before delivery to allow direct installation, removing the need for separation. |
| 3 | Motor lead wire terminal | Used to lead out cables on the motor side to connect to the U/V/W terminals on the drive side and the PE terminal. |

### 8.1.3 Product Specifications

| Model | Power (kW) | Speed (RPM) | Width of Crankshaft Key (mm) | Applicable Device |
|---|---|---|---|---|
| MX-37C80B | 264S | 800 | 7 | Air jet loom |
| MX-45C60B | 264M | 600 | | |
| MX-45C10C | 264L | 1000 | | |
| MX-37C80B-8 | 264S | 800 | 8 | |
| MX-45C60B-8 | 264M | 600 | | |
| MX-45C10C-8 | 264L | 1000 | | |
| MX-37C80B-W | 264S | 800 | 7 | Water jet loom |
| MX-45C60B-W | 264M | 600 | | |
| MX-45C10C-W | 264L | 1000 | | |
| MX-37C80B-8W | 264S | 800 | 8 | |
| MX-45C60B-8W | 264M | 600 | | |

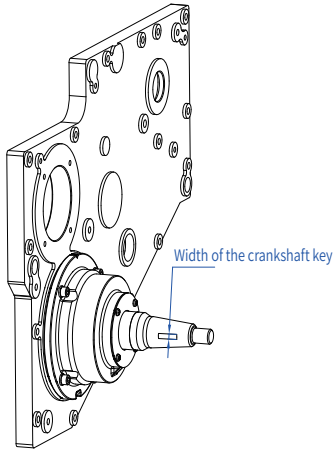


Figure 8-7 Width of crankshaft key

## 8.2 Installation Preparations

### 8.2.1 Installation Precautions

| DANGER | |
|---|---|
|  | ◆ The open space surrounding the motor is exposed to strong magnetic field and magnetic attraction due to the strong magnetism of the motor. Personnel implanted with cardiac pacemaker or metal therefore are not allowed to operate on an exposed motor. Clocks, watches and magnetizable memory units (such as a disc and credit card) must be kept away from the motor. |

| WARNING | |
|---|---|
|  | ◆ Installation and maintenance of the motor must be performed by qualified professionals only.<br>◆ Do not use cables with insulation layer damaged.<br>◆ Do not use the device in environments exposed to explosive gases.<br>◆ Do not use the spare part that is not on the permission list of the manufacturer.<br>◆ Do not install or use the device in environments with metal dust. Otherwise, faults may occur on the motor due to excessive metal dust attracted to the rotor.<br>◆ Do not strike the motor shaft or allow mechanical collision. Otherwise, the operation performance of the motor may be affected.<br>◆ Do not pull the PTC protection cable to prevent breaking.<br>◆ Prevent foreign objects from entering the motor. Failure to comply may cause faults or damage the motor. |

### 8.2.2 Tools for Installation and Disassembly

Table 8-3 Tools for installation and disassembly

| Name of Protective Devices and Tools | Requirement | Remarks |
|---|---|---|
| Anti-smashing safety shoes | 1 pair/person | - |
| Gloves | 1 pair/person | - |
| Safety helmet | 1 helmet/ person | - |
| Hoisting device | 1 | Hoisting weight: 20 kg to 30 kg |

| Name of Protective Devices and Tools | Requirement | Remarks |
|---|---|---|
| Inner hexagon wrench | 1 set | Used to secure the M5-M10 screw. |
| Monkey wrench | 1 | Used to secure the M20 screw. |
| Dial gauge | 1 | Detects the installation precision of the flange and crankshaft. |
| Torque wrench | 1 set | Confirms the tightening torque of the screw and nut. |
| Loctite 222 threadlocker (or an equivalent replacement) | 1 | Used to prevent loosening on the threaded part. |

### 8.2.3 Recommended Tightening Torque and Screw Specifications

The following table lists the recommended tightening torque of screw fasteners, which is applicable to motor installation and connection between the motor and the flange.

Table 8-4 Recommended tightening torque

| Nominal Thread Diameter | Property Class | | | | | | | | |
|---|---|---|---|---|---|---|---|---|---|
| | 12.9 | | | 10.9 | | | 8.8 | | |
| | Yield Load | Initial Tightening Force | Tightening Torque | Yield Load | Initial Tightening Force | Tightening Torque | Yield Load | Initial Tightening Force | Tightening Torque |
| | kgf | kgf | kgf.cm | kgf | kgf | kgf.cm | kgf | kgf | kgf.cm |
| M3x0.5 | 563 | 394 | 17 | 482 | 338 | 15 | 328 | 230 | 10 |
| M4x0.7 | 983 | 688 | 40 | 842 | 589 | 34 | 573 | 401 | 23 |
| M5x0.8 | 1590 | 1113 | 81 | 1362 | 953 | 69 | 927 | 649 | 47 |
| M6x1 | 2251 | 1576 | 138 | 1928 | 1349 | 118 | 1313 | 919 | 80 |
| M8x1.25 | 4099 | 2869 | 334 | 3510 | 2457 | 286 | 2390 | 1673 | 195 |
| M10x1.5 | 6496 | 4547 | 663 | 5562 | 3894 | 567 | 3787 | 2651 | 386 |
| M12x1.75 | 9442 | 6609 | 1160 | 8084 | 5659 | 990 | 5505 | 3853 | 674 |
| M14x2 | 12880 | 9016 | 1840 | 11029 | 7720 | 1580 | 7510 | 5257 | 1070 |
| M16x2 | 17584 | 12039 | 2870 | 15056 | 10539 | 2460 | 10252 | 7176 | 1670 |
| M18x2.5 | 21504 | 15053 | 3950 | 18413 | 12889 | 3380 | 12922 | 9045 | 2370 |
| M20x2.5 | 27440 | 19208 | 5600 | 23496 | 16447 | 4790 | 16489 | 11542 | 3360 |
| M22x2.5 | 33936 | 23755 | 7620 | 29058 | 20340 | 6520 | 20392 | 14274 | 4580 |
| M24x3 | 39536 | 27675 | 9680 | 33853 | 23697 | 8290 | 23757 | 16630 | 5820 |

■ Dimension reference of counter bores and tapped holes

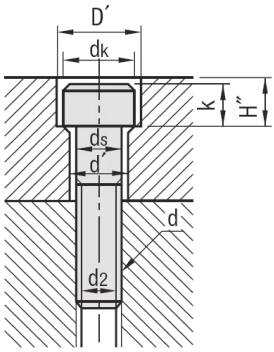


Figure 8-8 Dimension reference of counter bores and tapped holes

Table 8-5 Dimensions of counter bores and tapped hole

| Nominal Thread Diameter (d) | M3 | M4 | M5 | M6 | M8 | M10 | M12 | M14 | M16 | M18 | M20 | M22 | M24 | M27 | M30 |
|---|---|---|---|---|---|---|---|---|---|---|---|---|---|---|---|
| $d_s$ | 3 | 4 | 5 | 6 | 8 | 10 | 12 | 14 | 16 | 18 | 20 | 22 | 24 | 27 | 30 |
| d' | 3.4 | 4.5 | 5.5 | 6.6 | 9 | 11 | 14 | 16 | 18 | 20 | 22 | 24 | 26 | 30 | 33 |
| $d_k$ | 5.5 | 7 | 8.5 | 10 | 13 | 16 | 18 | 21 | 24 | 27 | 30 | 33 | 36 | 40 | 45 |
| D' | 6.5 | 8 | 9.5 | 11 | 14 | 17.5 | 20 | 23 | 26 | 29 | 32 | 35 | 39 | 43 | 48 |
| k | 3 | 4 | 5 | 6 | 8 | 10 | 12 | 14 | 16 | 18 | 20 | 22 | 24 | 27 | 30 |
| H" | 3.3 | 4.4 | 5.4 | 6.5 | 8.6 | 10.8 | 13 | 15.2 | 17.5 | 19.5 | 21.5 | 23.5 | 25.5 | 29 | 32 |
| $d_2$ | 2.6 | 3.4 | 4.3 | 5.1 | 6.9 | 8.6 | 10.4 | 12.2 | 14.2 | 15.7 | 17.7 | 19.7 | 21.2 | 24.2 | 26.7 |

## 8.3 Installation Guide

### 8.3.1 Installation Process

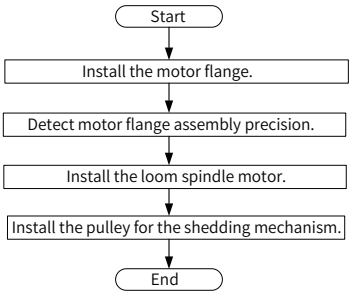


Figure 8-9 Installation process

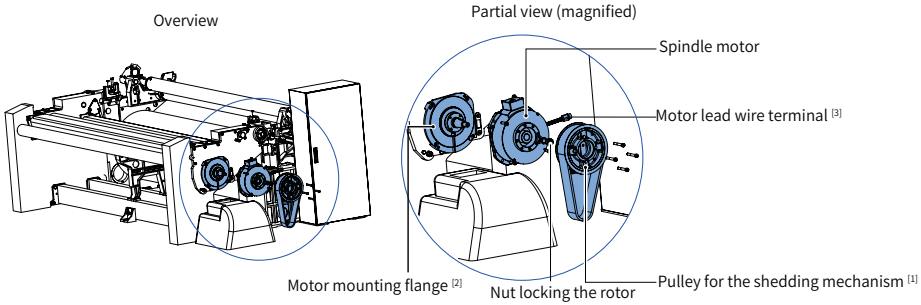


Figure 8-10 Components

[1] Whether to install the pulley for the shedding mechanism depends on actual applications. Absence of the pulley does not affect device operations.

[2] The motor flange can be designed and manufactured by the manufacturer or co-designed by the manufacturer and Inovance technical staff.

[3] The motor lead wire terminal must face the loom control cabinet/drive side.

## 8.3.2 Installation Procedure

### 1 Installing the motor flange

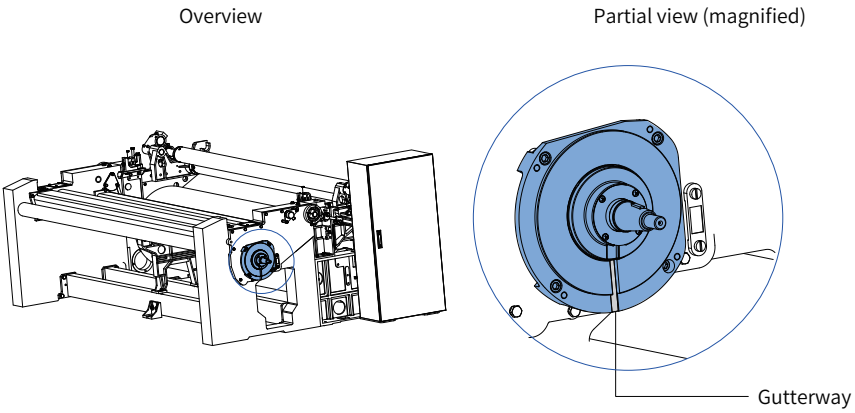


Figure 8-11 Installation of the flange face

NOTE

◆ The motor flange must be designed with a gutterway for timely detection of any oil leakage of the spindle bearing block. The motor adopts the integrated potting process which is totally water-proof and oil-proof to prevent oil leakage that affects the spindle bearing lubrication and heat dissipation.

## 2 Detecting the motor flange assembly accuracy

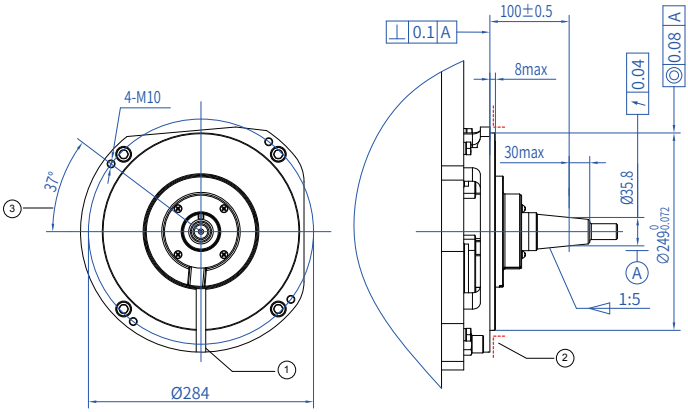


Figure 8-12 Installation of the flange face

NOTE

◆ To ensure installation accuracy, take measures to prevent the red-dashed part shown in the above figure from being sprayed with paint. The assembly accuracy must be measured by a dial gauge. If the requirement is not fulfilled, the rotor may touch the stator, leading to improper operation of the motor. In this case, you need to re-install the flange.

## 3 Installing the spindle motor

1) Aligning the keyway: Align the spindle keyway with the spindle motor slot.

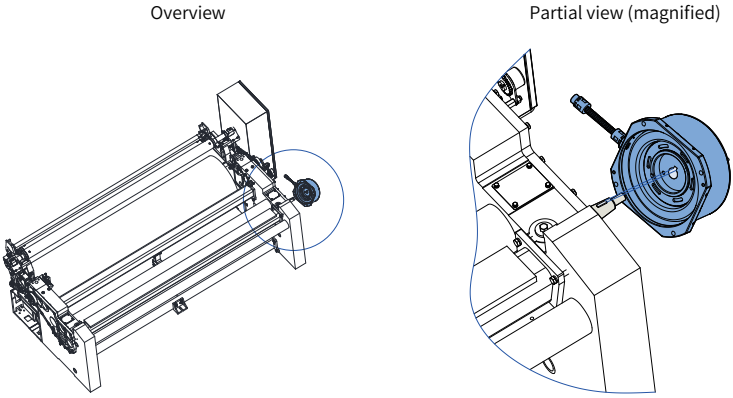


Figure 8-13 Alignment

2) Tighten the four stator screws ( ① in the following figure) and one rotor nut ( ② in the following figure) based on the recommended tightening torque.

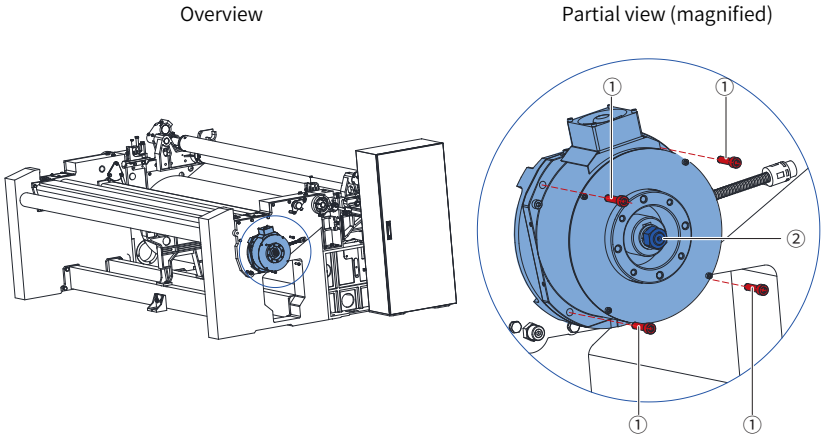


Figure 8-14 Positions of the nuts and screws

NOTE

- Stator lock screw: Red screws indicated by ① in the preceding figure (the screw color is for demonstration only).
- Rotor lock nut: Blue screws indicated by ② in the preceding figure (the screw color is for demonstration only).
- Apply Loctite 222 threadlocker on the thread part of the stator lock screw and rotor lock nut to prevent loosening.

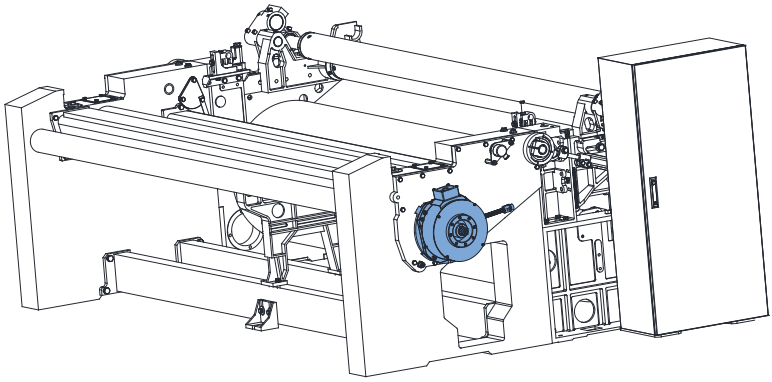

Figure 8-15 Diagram of a well installed motor and flange face

**4 Installing the pulley for the shedding mechanism**

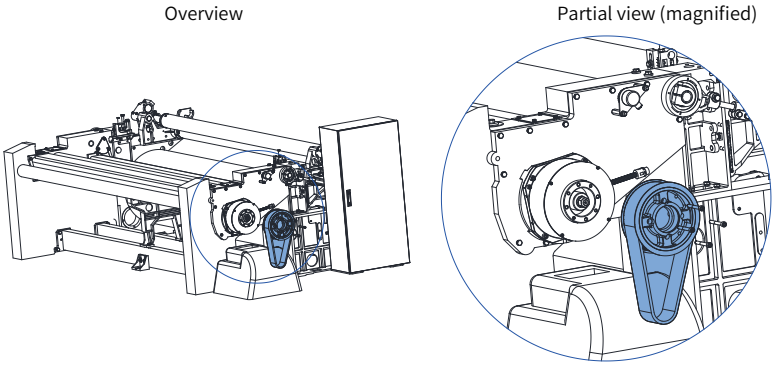


Figure 8-16 Installation of the pulley for the shedding mechanism

## 8.3.3 Diagram of Complete Device

After the installation is done, the complete device is shown as follows.

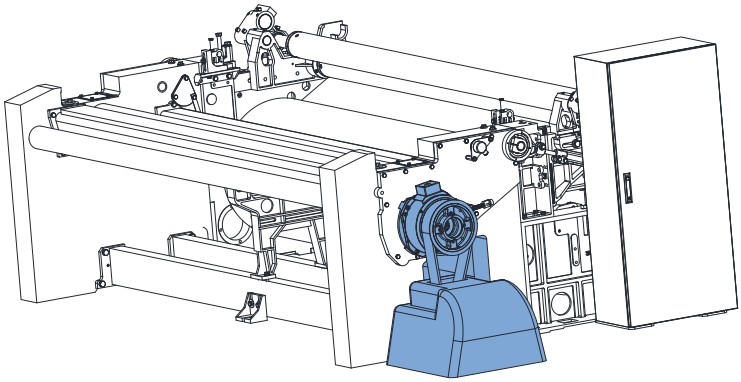

Figure 8-17 Complete device

## 8.3.4 Precautions After Installation

Table 8-6 Checklist after installation

| No. | Items | Solution |
|---|---|---|
| 1 | Manually rotate the rotor to check whether the motor gets stuck. | If yes, a foreign object may be stuck inside. In this case, re-install the motor by following the preceding steps. |
| 2 | Check whether the iron core end surface of the rotor is in the proper position (After pressing, check whether it is pressed in place by measuring the rotor height with a caliper. See the technical drawing for the rotor height.). | If the measured height differs from the value shown in the technical drawing, re-install the motor according to the preceding procedure. |

# 8.4 Disassembly Guide

## 8.4.1 Disassembly Process

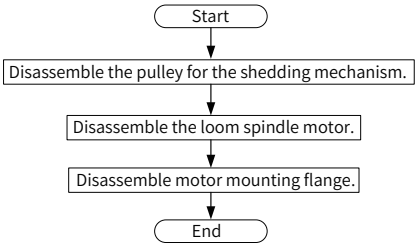


Figure 8-18 Disassembly process

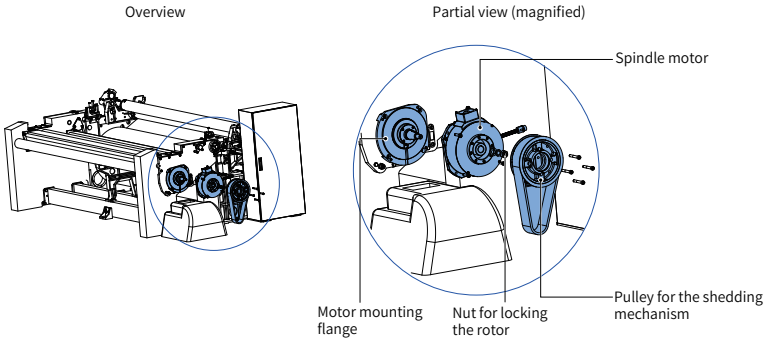


Figure 8-19 Disassembled components

## 8.4.2 Disassembly Procedure

**1 Disassembling the pulley for the shedding mechanism**

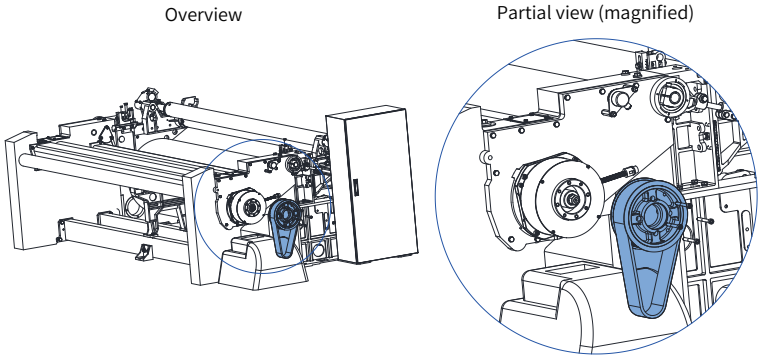


Figure 8-20 Diagram after pulley removal

**2 Disassembling the spindle motor**

1. Use a lifting device to lift up the motor. Prevent sudden falling of the motor after screw/nut disassembly to avoid physical injuries or device damage.

2. Separate the spindle motor stator from the flange face by using a disassembly screw ( ② in the following figure).

3. After removing the rotor lock nut ( ③ in the following figure), separate the spindle motor rotor from the flange face by using two disassembly screws ( ④ in the following figure).

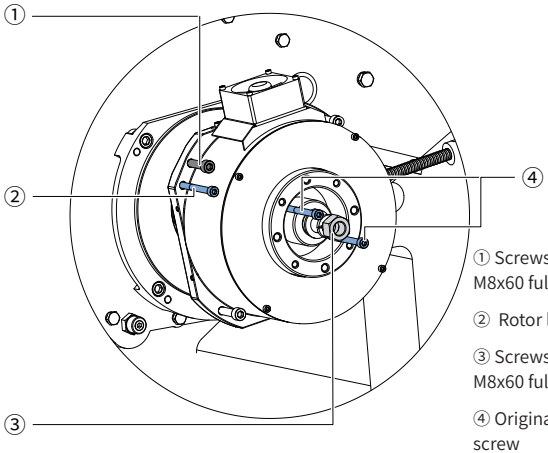


① Screws used for disassembly: M8x60 full-thread screw

② Rotor lock nut

③ Screws used for disassembly: M8x60 full-thread screw

④ Original flange mounting screw

Figure 8-21 Disassembled components

NOTE

- The rotor carries strong magnetism. Keep the rotor away from magnetic conductive metals to prevent:
  a) Physical injuries and device damage caused by sudden attraction.
  b) Spindle motor damage caused by magnetic conductive objects attracted to the rotor.

**3 The disassembly work is done after the flange face is removed.**

## 8.5 Commissioning of the Spindle Motor

See *"5 Quick Commissioning"* for details.

Copyright © Shenzhen Inovance Technology Co., Ltd.

19011248A02

**Shenzhen Inovance Technology Co., Ltd.**

**www.inovance.com**

**Add.:** Inovance Headquarters Tower, High-tech Industrial Park, Guanlan Street, Longhua New District, Shenzhen
**Tel:** (0755) 2979 9595 **Fax:** (0755) 2961 9897

**Suzhou Inovance Technology Co., Ltd.**

**www.inovance.com**

**Add.:** No. 16 Youxiang Road, Yuexi Town, Wuzhong District, Suzhou 215104, P.R. China
**Tel:** (0512) 6637 6666 **Fax:** (0512) 6285 6720