INOVANCE

User Guide

MD500 Series AC Drive

User Guide

A06

Data code 19010374

Preface

Thank you for purchasing the MD500 Series AC Drive developed by Inovance.

As a general-purpose and high-performance current vector AC drive, it is mainly used for controlling and adjusting the speed and torque of three-phase AC asynchronous motors. Using high-performance vector control technology, the MD500 series AC drive features high torque output at a low speed, excellent dynamic characteristics, and superior overload capability. It provides user-programmable features and monitoring software, and communication bus functions and supports multiple encoder types, delivering rich and powerful combined functions and stable performance. It can be used to drive automatic manufacturing equipment in the fields of textile, papermaking, drawing, machine tools, packaging, food, fans, and water pumps.

Product appearance

■ First use

Read this user guide carefully if you use the product for the first time. For any doubt on its function or performance, contact our technicians for help.

■ Standards compliance

The following table lists the certificates and standards that the product may comply with. For details about the acquired certificates, see the certification marks on the product nameplate.

Name	Directive Name		Standard
CE certification	EMC Directive	2014/30/EU	EN 61800-3
	LVD Directive	2014/35/EU	EN 61800-5-1
	RoHS Directive	2011/65/EU	EN 50581
TUV certification	-		EN 61800-5-1
UL certification			UL61800-5-1 C22.2 No.14-13

KC certification mark

AC drives bearing the KC mark on their nameplates comply with the Korean electromagnetic compatibility standards.

이 기기는 업무용(A 급) 전자파적합기기로서 판매자 또는사용자는 이 점을 주의하시기 바라며, 가정외의 지역에서 사용하는 것을 목적으로 합니다. For sellers or other users, please bear in mind that this device is an A-grade electromagnetic wave device. This device is intended to be used in areas other than at home.

■ Adjusting Drive Parameters

The drive when it leaves the factory with default settings should enable the user toget started quickly to check on the basic mechanical running conditions. At a later time,fine tuning to optimize the operation/performance can be undertaken.

Such parameter tuning should be done by qualified personnel who have prior trainingon Servo Drives. Some parameter settings can have adverse reactions if manipulated incorrectly and care should be taken especially during the commissioning startup stages to prevent personnel from engaging the machine.

This manual provides a complete list of the parameters with functional description and care should always be taken whenever parameters are adjusted during a live running startup. Inovance Technology and Authorized Distributors can provide product training and if in doubt seek advice.

Revision History

Date	Version	Revision Description
November 2015	V0.0	First release. Related firmware version: F7-10 = U76.56 and F7-11 = U77.56
April 2016	A01	Related firmware version: F7-10 = U76.56 and F7-11 = U77.56
November 2016	A02	Modified "Approvals", the designation rule and nameplate.
November 2017	A03	◆ Added 0.4 to 15 kW models. ◆ Deleted the MDKE7 operating panel and added the MDKE9 operating panel.
May 2019	A04	◆ Changed the document structure. ◆ Added information of three-phase 200 to 240 V models in the following sections: 1.1 Nameplate and Ordering Code 1.3 Technical Specifications 1.4 Product Dimensions 2.4 Selection of Cables, Breakers and Contactors 2.5 Selection of AC Output Reactors 2.6 Selection of Braking Components 3.1.2 Backplate Mounting and Through Hole Mounting (Note: Three-phase 200 to 240 V models indicates MD500-2T0.4GB to MD500-2T55GB.) ◆ Added specifications of cables that comply with the UL certification in "Selection of Cables, Breakers and Contactors". ◆ Added the selection table of braking components in "2.6 Selection of Braking Components". ◆ Updated Inovance's logo. ◆ Modified the setting range of F3-00 and F3-01 in "Appendix A Parameter Table".
July 2020	A05	◆ Deleted the service hotline. ◆ Modified the default value of F7-05 in "Appendix A Parameter Table".
March 2026	A06	◆ Updated the front cover, back cover, safety label, KC, and technical data.

■ Acquisition

This user guide is shipped with the product. For any additional order, contact your sales representative.

This user guide briefly introduces product information, installation and wiring, troubleshooting, and routine maintenance. For more details, see 19010355 MD500 Series AC Drive Advanced User Guide.

To obtain the user guide, access Inovance's website (http://www.inovance.com), click Download, search for the user guide by its name, and then download the PDF file.

Safety Instructions

Safety Precautions

1) Before installing, using, and maintaining this equipment, read the safety information and precautions thoroughly, and comply with them during operations.
2) To ensure the safety of humans and equipment, follow the signs on the equipment and all the safety instructions in this user guide.
3) "CAUTION", "WARNING", and "DANGER" items in the user guide do not indicate all safety precautions that need to be followed; instead, they just supplement the safety precautions.
4) Use this equipment according to the designated environment requirements. Damage caused by improper usage is not covered by warranty.
5) Inovance shall take no responsibility for any personal injuries or property damage caused by improper usage.

Safety Levels and Definitions

DANGER	indicates that failure to comply with the notice will result in severe personal injuries or even death.
WARNING	indicates that failure to comply with the notice may result in severe personal injuries or even death.
CAUTION	indicates that failure to comply with the notice may result in minor personal injuries or damage to the equipment.

Safety Instructions

Unpacking
CAUTION ◆ Check whether the packing is intact and whether there is damage, water seepage, damp, and deformation. ◆ Unpack the package by following the package sequence. Do not hit the package with force. ◆ Check whether there are damage, rust, or injuries on the surface of the equipment or equipment accessories. ◆ Check whether the number of packing materials is consistent with the packing list.

WARNING

- Do not install the equipment if you find damage, rust, or indications of use on the equipment or accessories.
- Do not install the equipment if you find water seepage, component missing or damage upon unpacking.
- Do not install the equipment if you find the packing list does not conform to the equipment you received.

Storage and Transportation

CAUTION

- Store and transport this equipment based on the storage and transportation requirements for humidity and temperature.
- Avoid transporting the equipment in environments such as water splashing, rain, direct sunlight, strong electric field, strong magnetic field, and strong vibration.
- Avoid storing this equipment for more than three months. Long-term storage requires stricter protection and necessary inspections.
- Pack the equipment strictly before transportation. Use a sealed box for long-distance transportation.
- Never transport this equipment with other equipment or materials that may harm or have negative impacts on this equipment.

WARNING

- Use professional loading and unloading equipment to carry large-scale or heavy equipment.
- When carrying this equipment with bare hands, hold the equipment casing firmly with care to prevent parts falling. Failure to comply may result in personal injuries.
- Handle the equipment with care during transportation and mind your step to prevent personal injuries or equipment damage.
- Never stand or stay below the equipment when the equipment is lifted by hoisting equipment.

Installation

WARNING

- Thoroughly read the safety instructions and user guide before installation.
- Do not modify this equipment.
- Do not loosen fixed bolts (especially those marked in red) on equipment components.
- Do not install this equipment in places with strong electric or magnetic fields.
- When this equipment is installed in a cabinet or final equipment, protection measures such as a fireproof enclosure, electrical enclosure, or mechanical enclosure must be provided. The IP rating must meet IEC standards and local laws and regulations.

DANGER

- Equipment installation, wiring, maintenance, inspection, or parts replacement must be performed only by professionals.
- Installation, wiring, maintenance, inspection, or parts replacement must be performed only by experienced personnel who have been trained with necessary electrical information.
- Installation personnel must be familiar with equipment installation requirements and relevant technical materials.
- Before installing equipment with strong electromagnetic interference, such as a transformer, install an electromagnetic shielding device for this equipment to prevent malfunctions.

Wiring

DANGER

- Equipment installation, wiring, maintenance, inspection, or parts replacement must be performed only by professionals.
- Never perform wiring at power-on. Failure to comply will result in an electric shock.
- Before wiring, cut off all equipment power supplies. Wait at least 10 minutes before further operations because residual voltage exists after power-off.
- Make sure that the equipment is well grounded. Failure to comply will result in an electric shock.
- During wiring, follow the proper electrostatic discharge (ESD) procedures, and wear an antistatic wrist strap. Failure to comply will result in damage to internal equipment circuits.

WARNING

- Never connect the power cable to output terminals of the equipment. Failure to comply may cause equipment damage or even a fire.
- When connecting a drive with the motor, make sure that the phase sequences of the drive and motor terminals are consistent to prevent reverse motor rotation.
- Wiring cables must meet diameter and shielding requirements. The shielding layer of the shielded cable must be reliably grounded at one end.
- After wiring, make sure that no screws are fallen and cables are exposed in the equipment.

Power-on

DANGER

- Before power-on, make sure that the equipment is installed properly with reliable wiring and the motor can be restarted.
- Before power-on, make sure that the power supply meets equipment requirements to prevent equipment damage or even a fire.
- At power-on, unexpected operations may be triggered on the equipment. Therefore, stay away from the equipment.
- After power-on, do not open the cabinet door and protective cover of the equipment. Failure to comply will result in an electric shock.
- Do not touch any wiring terminals at power-on. Failure to comply will result in an electric shock.
- Do not remove any part of the equipment at power-on. Failure to comply will result in an electric shock.

Operation

DANGER

- Do not touch any wiring terminals during operation. Failure to comply will result in an electric shock.
- Do not remove any part of the equipment during operation. Failure to comply will result in an electric shock.
- Do not touch the equipment shell, fan, or resistor for temperature detection. Failure to comply will result in heat injuries.
- Signal detection must be performed only by professionals during operation. Failure to comply will result in personal injuries or equipment damage.

WARNING

- Prevent metal or other objects from falling into the device during operation. Failure to comply may result in equipment damage.
- Do not start or stop the equipment using the contactor. Failure to comply may result in equipment damage.

Maintenance

DANGER

- Equipment installation, wiring, maintenance, inspection, or parts replacement must be performed only by professionals.
- Do not maintain the equipment at power-on. Failure to comply will result in an electric shock.
- Before maintenance, cut off all equipment power supplies and wait at least 10 minutes.

WARNING

- Perform daily and periodic inspection and maintenance for the equipment according to maintenance requirements and keep a maintenance record.

Repair

DANGER

- Equipment installation, wiring, maintenance, inspection, or parts replacement must be performed only by professionals.
- Do not repair the equipment at power-on. Failure to comply will result in an electric shock.
- Before inspection and repair, cut off all equipment power supplies and wait at least 10 minutes.

WARNING

- Require repair services according to the product warranty agreement.
- When the equipment is faulty or damaged, require professionals to perform troubleshooting and repair by following repair instructions and keep a repair record.
- Replace quick-wear parts of the equipment according to the replacement guide.
- Do not operate damaged equipment. Failure to comply may result in worse damage.
- After the equipment is replaced, perform wiring inspection and parameter settings again.

Disposal

WARNING

- Retire equipment by following local regulations or standards. Failure to comply may result in property damage, personal injuries, or even death.
- Dispose of or recycle retired equipment by following industry waste disposal standards to avoid environmental pollution.

Contents

Preface 1
Revision History 3
Safety Instructions 4
Safety Precautions 4
Safety Levels and Definitions 4
Safety Instructions 4
Safety Signs 9
1 Product Information 12
1.1 Nameplate and Model Number 12
1.2 Components 13
1.3 Technical Data 15
1.4 Overall Dimensions 21
1.4.1 Overall Dimensions of MD500T0.4GB to MD500T160G and MD500-2T0.4GB to MD500-2T55G 21
1.4.2 Overall Dimensions of MD500T200G to MD500T450G 23
1.4.3 Overall Dimensions of MD500T200G-L to MD500T450G-L 24
2 System Connections 26
2.1 MD500 System Connection Diagram 26
2.2 MD500 System Structure 27
2.3 Options 28
2.4 Selection of Cables, Breakers, and Contactors 31
2.5 Selection of the AC Output Reactor 35
2.6 Selection of Braking Components 37
2.7 External Operating Panels 40
3 Installation and Wiring 43
3.1 Installation 43
3.1.1 Installation Environment 43
3.1.2 Backplate Mounting and Through-Hole Mounting 44
3.1.3 Mounting in the Cabinet 46
3.2 Wiring 49
3.2.1 Standard Wiring Diagram 49
3.2.2 Main Circuit Terminals 50
3.2.3 Control Circuit Terminals 51

4 Panel Operations 54
4.1 Introduction 54
4.2 Keys on the Operating Panel 54
4.3 Indicators on the Operating Panel 55
5 Basic Operations and Trial Run 56
5.1 Quick Commissioning 56
5.2 Precautions Before Power-on 56
5.3 Status Display After Power-on 57
5.4 Parameter Initialization 57
5.5 Motor Control Modes 58
5.6 Auto-tuning 58
6 Troubleshooting and Solutions 60
6.1 Fault Codes and Solutions 60
6.2 Common Symptoms and Solutions 66
7 Maintenance 69
7.1 Routine Maintenance 69
7.2 Periodic Inspection 70
7.3 Replacement of Wear Parts 70
7.3.1 Service Life of Wear Parts 70
7.3.2 Replacing Cooling Fans 71
7.4 Storage 72
Appendix A Parameter Table 73
A.1 Standard Parameter Table 73
A.2 Monitoring Parameters 99
Warranty Agreement 102

Safety Signs

■ Description of safety signs in the user guide

Read the user guide before installation and operation.

Reliably ground the system and equipment.

Danger!

High temperature!

Prevent personal injuries caused by machines.

High voltage!

Wait xx minutes before further operations.

■ Description of safety signs on the equipment

For safe equipment operation and maintenance, comply with safety signs on the equipment, and do not damage or remove the safety labels. The following table describes the safety signs.

Safety Sign	Description
	◆ Read the user guide before installation and operation. Failure to comply will result in an electric shock. ◆ Do not remove the cover at power-on or within 10 minutes after power-off. ◆ Before maintenance, inspection, and wiring, cut off input and output power, and wait at least 10 minutes until the power indicator is off.

1 Product Information

1.1 Nameplate and Model Number

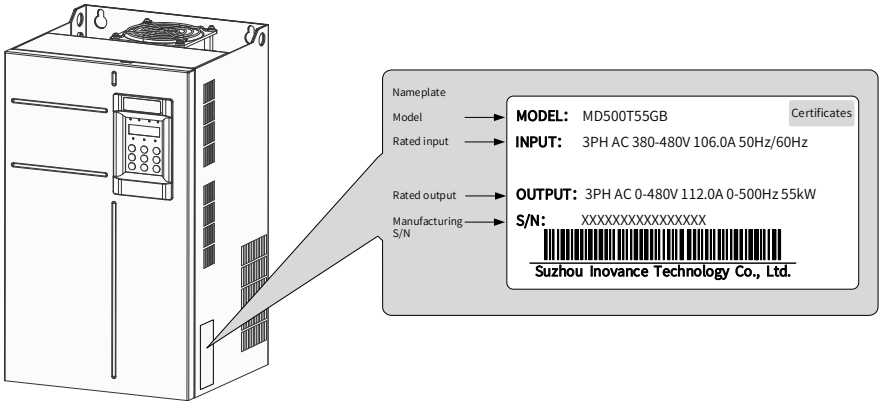

MD500 T 55 G B

Mark	Product
MD500	AC drive series

Mark	Voltage Class
T	Three phase 380–480 V
2T	Three phase 200–240 V

Mark	Power Class (kW)
0.4	0.4
...	...
450	450

Mark	Applicable Motor Type
G	General

Mark	Reactor
Blank	None
-L	With the output AC reactor, applicable to MD500T200G-L to MD500T450G-L
-T	With the DC reactor, applicable to MD500T18.5G to MD500T22G

Mark	Braking Unit
Blank	None
B	With the braking unit

Figure 1-1 Nameplate and ordering code

1.2 Components

The AC drive has either a plastic housing (three-phase 380 V, 0.4 to 15 kW models and three-phase 220 V, 0.4 to 7.5 kW models used as an example) or a sheet metal housing (200 to 450 kW models used as an example), depending on the voltage and power class, as shown in the following figures.

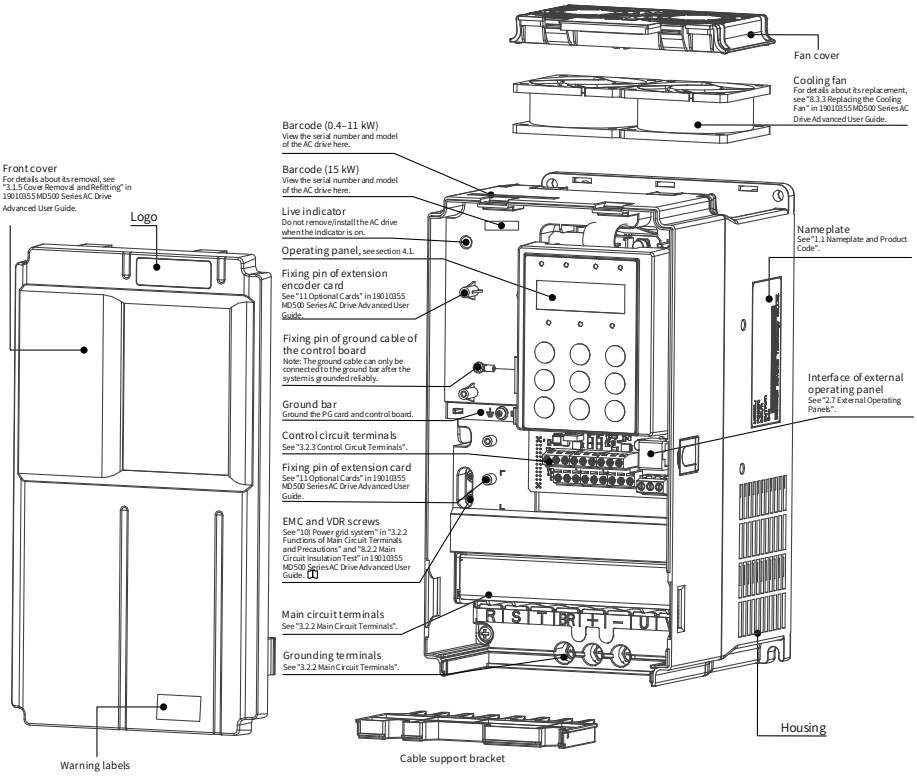

Warning Label		Description
		CAUTION! Read the user guide carefully before installation or operation.
	10min	DANGER! Do not remove the front cover while the power is on or within 10 minutes after the power is turned off.

Figure 1-2 Product parts (MD500T0.4GB to MD500T15GB, MD500-2T0.4GB to MD500-2T7.5GB)

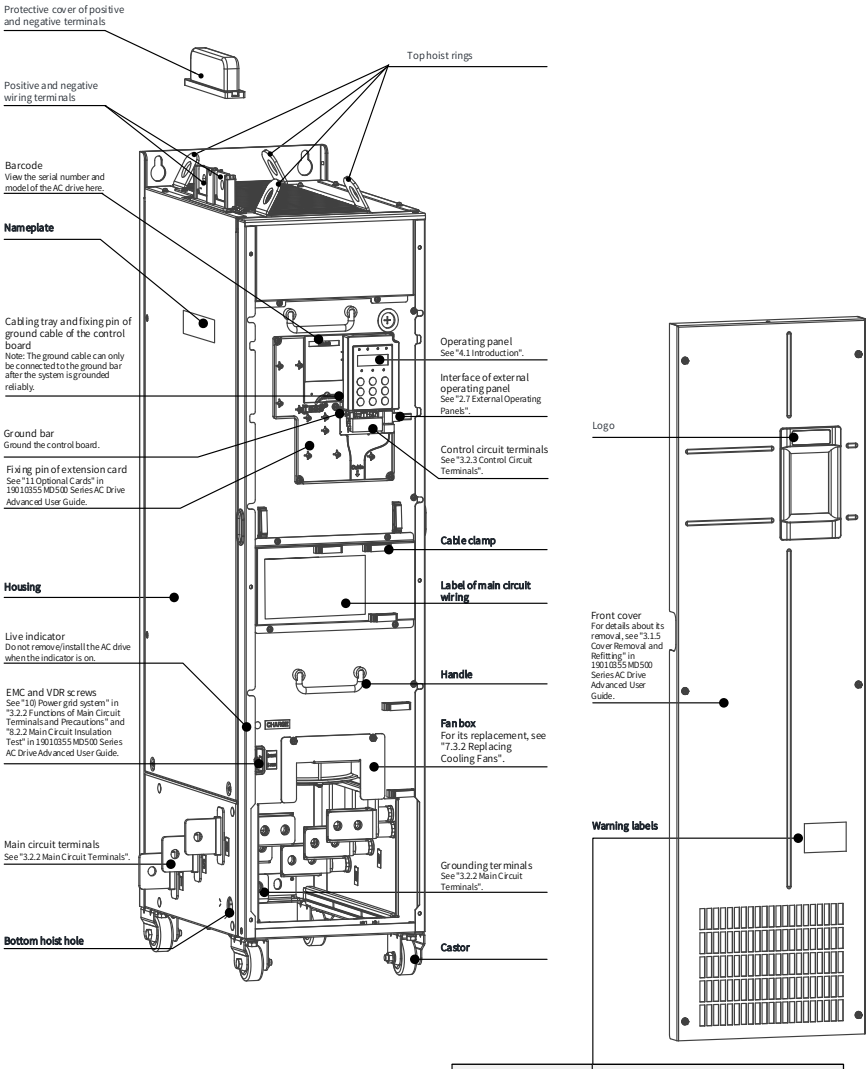

Warning Label		Description
		CAUTION! Read the user guide carefully before installation or operation.
	10min	DANGER! Do not remove the front cover while the power is on or within 10 minutes after the power is turned off.

Figure 1-3 Product parts (MD500T200G to MD500T450G)

1.3 Technical Data

Table 1-1 Models and technical data (three phase 380–480 V)

Item			Specification														
MD500TXXG(B)			0.4	0.7	1.1	1.5	2.2	3.0	3.7	5.5	7.5	11	15	18.5	22	30	37
Output	Applicable motor	(kW)	0.4	0.75	1.1	1.5	2.2	3.0	3.7	5.5	7.5	11	15	18.5	22	30	37
		(HP)	0.5	1	1.5	2	3	4	5	7.5	10	15	20	25	30	40	50
	Rated output current (A)		1.5	2.1	3.1	3.8	5.1	7.2	9.0	13.0	17.0	25.0	32.0	37	45	60	75
	Output voltage		0 to input voltage														
	Maximum output frequency		500 Hz														
	Carrier frequency		0.8 to 8.0 kHz (automatically adjusted according to the load characteristics)														
	Overload capacity		150% for 60s with rated current														
Input	Rated input current (A)		1.8	2.4	3.7	4.6	6.3	9.0	11.4	16.7	21.9	32.2	41.3	49.5	59	57	69
	Rated voltage/ frequency		AC: Three-phase 380 to 480 V, 50/60 Hz														
	Allowed voltage fluctuation		-15% to 10%; actual allowed range: 323 to 528 VAC														
	Allowed frequency fluctuation		±5%														
	Power capacity (kVA)		2	2.8	4.1	5	6.7	9.5	12	17.5	22.8	33.4	42.8	45	54	52	63
Thermal design	Thermal power consumption (kW)		0.039	0.046	0.057	0.068	0.081	0.109	0.138	0.201	0.24	0.355	0.454	0.478	0.551	0.694	0.815
	Air flow (CFM)		-	-	-	9	9	9	20	24	30	40	42	51.9	57.4	118.5	118.5

Item			Specification														
MD500TXXG(B)			45	55	75	90	110	132	160	200	220	250	280	315	355	400	450
Output	Applicable motor	(kW)	45	55	75	90	110	132	160	200	220	250	280	315	355	400	450
		(HP)	60	75	100	125	150	180	220	275	300	340	380	430	485	545	615
	Rated output current (A)		91	112	150	176	210	253	304	377	426	465	520	585	650	725	820
	Output voltage		0 to input voltage														
	Maximum output frequency		500 Hz														
	Carrier frequency		0.8 to 8.0 kHz			0.8 to 6.0 kHz											
			Automatically adjusted according to the load characteristics														
	Overload capacity		150% for 60s with rated current (MD500T450G: 130% for 60s with the rated current)														
Input	Rated input current (A)		89	106	139	164	196	240	287	365	410	441	495	565	617	687	782
	Rated voltage/ frequency		AC: Three-phase 380 to 480 V, 50/60 Hz														
	Allowed voltage fluctuation		-15% to 10%; actual allowed range: 323 to 528 VAC														
	Allowed frequency fluctuation		±5%														
	Power capacity (kVA)		81	97	127	150	179	220	263	334	375	404	453	517	565	629	716

Item		Specification														
Thermal design	Thermal power consumption (kW)	1.01	1.21	1.57	1.81	2.14	2.85	3.56	4.15	4.55	5.06	5.33	5.69	6.31	6.91	7.54
	Air flow (CFM)	122.2	122.2	218.6	287.2	354.2	547	627	638.4	722.5	789.4	882	645	860	860	860

Table 1-2 Models and technical data (three phase 200–240 V)

Item			Specification															
MD500-2TXXG(B)			0.4	0.7	1.1	1.5	2.2	3.7	5.5	7.5	11	15	18.5	22	30	37	45	55
Output	Applicable motor	(kW)	0.4	0.75	1.1	1.5	2.2	3.7	5.5	7.5	11	15	18.5	22	30	37	45	55
		(HP)	0.5	1	1.5	2	3	5	7.5	10	15	20	25	30	40	50	60	75
	Rated output current (A)		2.1	3.8	5.1	7.2	9	13	25	32	45	60	75	91	112	150	176	210
	Output voltage		0 to input voltage															
	Maximum output frequency		500 Hz															
	Carrier frequency		0.8 to 8.0 kHz (automatically adjusted according to the load characteristics)															
	Overload capacity		150% for 60s with rated current															
Input	Rated input current (A)		2.4	4.6	6.3	9	11.4	16.7	32.2	41.3	59	57	69	89	106	139	164	196
	Rated voltage/ frequency		AC: Three-phase 200 to 240 V, 50/60 Hz															
	Allowed voltage fluctuation		-15% to 10%; actual allowed range: 170 to 264 VAC															
	Allowed frequency fluctuation		±5%															
	Power capacity (kVA)		1.1	2.1	2.9	4.2	5.3	7.7	14.8	18.9	27	27	31.6	40.7	48.5	63.6	75	89.7
Thermal design	Thermal power consumption (kW)		0.037	0.054	0.065	0.087	0.11	0.16	0.28	0.36	0.44	0.55	0.65	0.8	0.97	1.26	1.45	1.71
	Air flow (CFM)		/	9	9	9	20	24	40	42	57.4	118.5	118.5	122.2	122.2	218.6	287.2	354.2

NOTE

- The technical data of MD500T18.5G(B)(-T) to MD500T22G(B)(-T) is similar to that of MD500T18.5G(B) to MD500T22G(B).
- The rated power is measured at 440 VAC input voltage.

Table 1-3 Technical specifications of the MD500 series AC drive

Item		Description	
Standard functions	Input frequency resolution	Digital setting: 0.01 Hz Analog setting: Maximum frequency x 0.025%	
	Control mode	Sensorless vector control (SVC) Feedback vector control (FVC) Voltage/Frequency (V/F) control	
	Startup torque	0.25 Hz/150% (SVC) 0 Hz/180% (FVC)	
	Speed range	1:200 (SVC)	1:1000 (FVC)
	Speed stability accuracy	±0.5% (SVC)	±0.02% (FVC)
	Torque control accuracy	±3% (FVC); ±5% for 5 Hz above (SVC)	
	Torque boost	Automatic boost; Customized boost 0.1 % to 30.0 %	
	V/F curve	Straight-line V/F curve Multi-point V/F curve Complete V/F separation Half V/F separation	
	Ramp mode	Straight-line ramp S-curve ramp Four separate acceleration/deceleration time settings in the range of 0.0s to 6500.0s.	
	DC injection braking	DC injection braking frequency: 0 Hz to the maximum frequency DC injection braking active time: 0.0s to 36.0s. Current level of DC injection braking: 0.0% to 100.0%.	
	Jog running	Frequency range of jog running: 0.00 to 50.00 Hz Acceleration/Deceleration time of jog running: 0.0s to 6500.0s	
	Simple PLC and multi-speed running	The system implements up to 16 speeds by using the simple PLC function or control terminals.	
	Built-in PID	The system implements the proportional–integral–derivative (PID) function in the closed-loop control.	
	Automatic voltage regulation (AVR)	The system maintains a constant output voltage automatically when the grid voltage changes through the permissible range.	
	Overvoltage and overcurrent stall control	The system limits the output current and voltage automatically during operation to prevent frequent or excessive trips.	
	Overcurrent fast prevention	The function helps to avoid frequent overcurrent faults.	
	Torque limit and control	The system limits the torque automatically to prevent frequent overcurrent tripping during operation. Torque control is applied in vector control.	

Item		Description
Customized functions	Power dip ride-through	The load feedback energy compensates for any voltage reduction, allowing the AC drive to continue to operate for a short time during power dips.
	Overcurrent fast prevention	The function helps to avoid frequent overcurrent faults.
	Virtual I/O	Five groups of virtual digital inputs/outputs (DI/DO) support simple logic control.
	Timing control	Time range: 0.0 to 6500.0 minutes
	Dual-motor switchover	The AC drive can control up to two motors using two groups of motor parameters.
	Multiple field buses	The AC drive supports four field buses: Modbus, PROFIBUS-DP, CANlink, and CANopen.
	Motor overheat protection	The optional input/output (I/O) extension card allows the AI3 terminal to receive a signal from the motor temperature sensor input (PT100, PT1000) to implement motor overheat protection.
	Multiple encoder types	The AC drive supports a range of different encoder types, including the differential encoder, open-collector encoder, UVW encoder, and resolver.
	User programmable function	The optional programming card supports secondary development in a programming environment compatible with the Inovance programmable logic controller (PLC).
	Advanced commissioning software	Software in the AC drive allows users to configure some operating parameters, and provides a virtual oscilloscope display that shows system status.

Item		Description
Running	Running command	Allows different methods of switching between running commands: Operating panel; terminal I/O control; and serial communication
	Main frequency reference setting channel	Supports up to 10 frequency reference setting channels and allows different methods of switching between frequency reference setting channels: ◆ Digital setting ◆ Analog voltage reference ◆ Analog current reference ◆ Pulse reference ◆ Communication reference
	Auxiliary frequency reference setting channel	Supports up to 10 auxiliary frequency sources, and allows fine tuning of the auxiliary frequency and main & auxiliary calculation.
	Input terminals	Standard: ◆ Five digital input (DI) terminals, one of which supports up to 100 kHz high-speed pulse inputs ◆ Two analog input (AI) terminals, one of which supports only 0 to 10 V input, and the other supports 0 to 10 V and 0 to 20 mA current input Expanded capacity: ◆ Five digital input (DI) terminals ◆ One AI terminal that supports –10 to +10 V voltage input and PT100/PT1000 motor temperature sensor inputs
	Output terminals	Standard: ◆ Single high-speed pulse output terminal (open-collector) for a square-wave signal output in the frequency range of 0 to 100 kHz ◆ Single DO terminal ◆ Single relay output terminal ◆ Single analog output (AO) terminal that supports either a current output in the range 0 to 20 mA or a voltage output in the range 0 to 10 V Expanded capacity: ◆ Single digital output (DO) terminal ◆ Single relay output terminal Single analog output (AO) terminal that supports either a current output in the range 0 to 20 mA or a voltage output in the range 0 to 10 V
Display and operating panel	LED display	Shows parameters.
	LCD display	It is optional and shows parameters in Chinese or English.
	Parameter copy	The LCD operating panel can be used to copy parameters quickly.
	Key locking and function selection	Keys on the control panel can be locked partially or electronically to prevent accidental operation.

Item		Description
Protections	Phase loss protection	Input phase loss protection Output phase loss protection
	Instantaneous overcurrent protection	The AC drive stops when 250% of the rated output current is exceeded.
	Overvoltage protection	The AC drive stops when the DC voltage of the main circuit is above 820 V.
	Undervoltage protection	The AC drive stops when the DC voltage of the main circuit is below 350 V.
	Overheat protection	Protection is triggered when the inverter bridge gets overheated.
	Overload protection	The AC drive stops after running at 150% of rated current for 60 seconds.
	Overcurrent protection	The AC drive stops when 2.5 times of rated current of the AC drive is exceeded.
	Braking protection	Braking unit overload protection Braking resistor short-circuit protection
	Short-circuit protection	Output phase-to-phase short-circuit protection Output phase-to-ground short-circuit protection
Environment	Installation location	Install the AC drive where it is indoors and protected from direct sunlight, dust, corrosive or combustible gases, oil smoke, vapor, ingress of water or any other liquid, and salt.
	Altitude	Below 1000 m If the altitude exceeds 1000 m, de-rating by 1% for per 100 m increase Maximum altitude: 3000 m (Note: The maximum altitude for 0.4 to 3 kW models is 2000 m. For use at the altitude higher than 2000 m, contact the agent or Inovance.)
	Ambient temperature	-10°C to +50°C If the ambient temperature is 40°C to 50°C , de-rating by 1.5% per 1°C increase
	Humidity	Less than 95% RH non-condensing
	Vibration	Less than 5.9 m/s^2 (0.6 g)
	Storage temperature	-20°C to +60°C

1.4 Overall Dimensions

1.4.1 Overall Dimensions of MD500T0.4GB to MD500T160G and MD500-2T0.4GB to MD500-2T55G

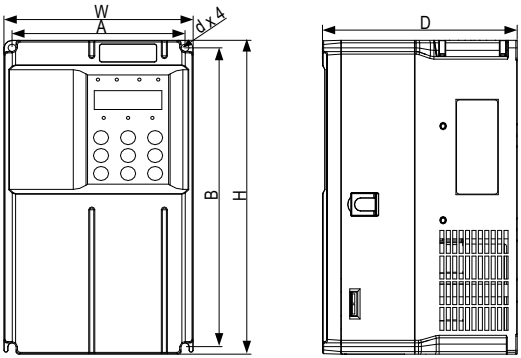

Figure 1-4 Overall and mounting dimensions of MD500T0.4GB to MD500T15GB and MD500-2T0.4GB to MD500-2T7.5GB

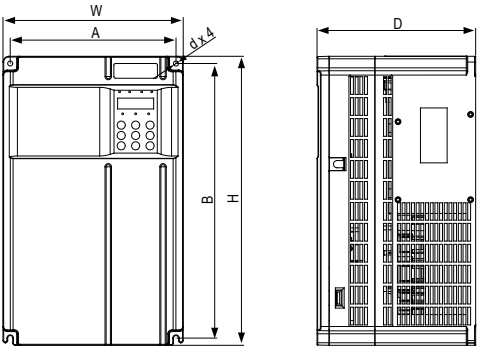

Figure 1-5 Overall and mounting dimensions of MD500T18.5G(B)to MD500T37G(B) and MD 500-2T11G(B) to MD500-2T18.5G(B)

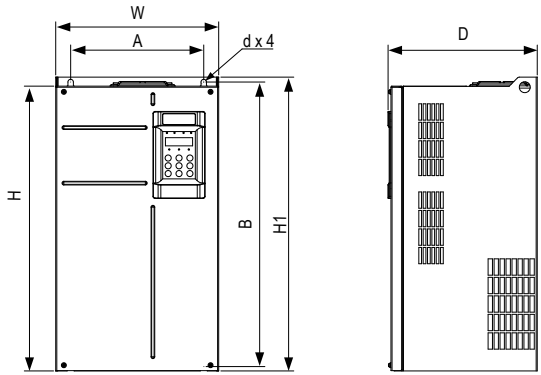

Figure 1-6 Overall and mounting dimensions of MD500T45G(B) to MD500T160G and MD 500-2T22G(B) to MD500-2T55G

Table 1-4 Mounting hole dimensions of MD500T0.4GB to MD500T160G (three phase 380–480 V)

Model	Hole Dimensions (mm)		Overall Dimensions (mm)				Hole Diameter (mm)	Weight (kg)
	A	B	H	H1	W	D	d	
MD500T0.4GB	119	189	200	-	130	152	Ø5	1.6
MD500T0.7GB								
MD500T1.1GB								
MD500T1.5GB								
MD500T2.2GB								
MD500T3.0GB								
MD500T3.7GB	119	189	200	-	130	162	Ø5	2.0
MD500T5.5GB								
MD500T7.5GB	128	238	250	-	140	170	Ø6	3.3
MD500T11GB								
MD500T15GB	166	266	280	-	180	170	Ø6	4.3
MD500T18.5G(B)	195	335	350	-	210	192	Ø6	7.6
MD500T22G(B)								
MD500T18.5G(B)-T	195	335	350	-	210	192	Ø6	10.0
MD500T22G(B)-T								
MD500T30G(B)	230	380	400	-	250	220	Ø7	17.5
MD500T37G(B)								
MD500T45G(B)	245	523	525	542	300	275	Ø10	35.0
MD500T55G(B)								
MD500T75G(B)	270	560	554	580	338	315	Ø10	51.5
MD500T90G								
MD500T110G								
MD500T132G	320	890	874	915	400	320	Ø10	85.0
MD500T160G								

Table 1-5 Mounting hole dimensions of MD500-2T0.4GB to MD500-2T55G (three phase 200–240 V)

Model	Hole Dimensions (mm)		Overall Dimensions (mm)				Hole Diameter (mm)	Weight (kg)
	A	B	H	H1	W	D	d	
MD500-2T0.4GB	119	189	200	-	130	152	Ø5	1.6
MD500-2T0.7GB								
MD500-2T1.1GB								
MD500-2T1.5GB								
MD500-2T2.2GB	119	189	200	-	130	162	Ø5	2.0
MD500-2T3.7GB								
MD500-2T5.5GB	128	238	250	-	140	170	Ø6	3.3
MD500-2T7.5GB	166	266	280	-	180	170	Ø6	4.3
MD500-2T11G(B)	195	335	350	-	210	192	Ø6	10.0
MD500-2T15G(B)	230	380	400	-	250	220	Ø7	17.5
MD500-2T18.5G(B)								
MD500-2T22G(B)	245	523	525	542	300	275	Ø10	35.0
MD500-2T30G(B)								
MD500-2T37G(B)	270	560	554	580	338	315	Ø10	51.5
MD500-2T45G								
MD500-2T55G								

1.4.2 Overall Dimensions of MD500T200G to MD500T450G

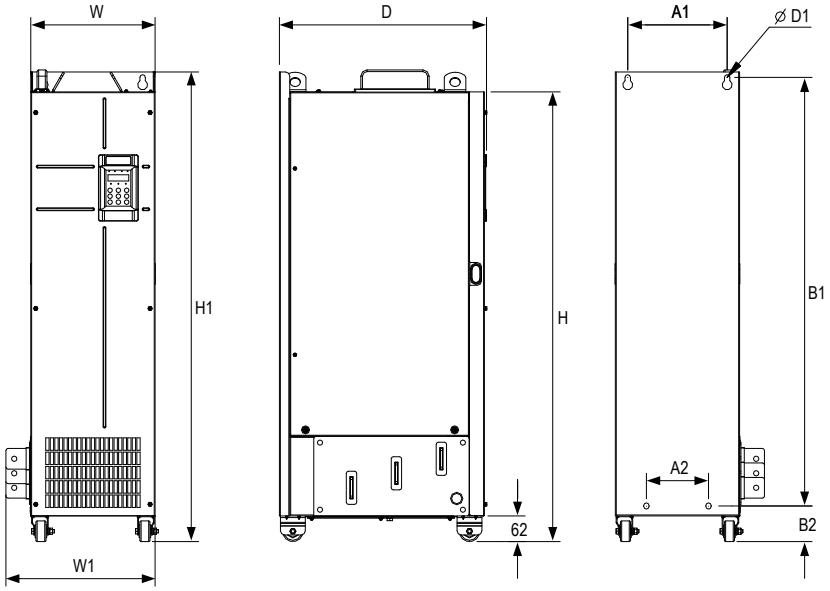

Figure 1-7 Overall and mounting dimensions of MD500T200G to MD500T450G

Table 1-6 Mounting hole dimensions of MD500T200G to MD500T450G

Model	Hole Dimensions (mm)				Overall Dimensions (mm)					Hole Diameter (mm)	Weight (kg)
	A1	A2	B1	B2	H	H1	W	W1	D	D1	
MD500T200G	240	150	1035	86	1086	1134	300	360	500	Ø13	110
MD500T220G											
MD500T250G	225	185	1175	97	1248	1284	330	390	545	Ø13	155
MD500T280G											
MD500T315G	240	200	1280	101	1355	1405	340	400	545	Ø16	185
MD500T355G											
MD500T400G											
MD500T450G											

1.4.3 Overall Dimensions of MD500T200G-L to MD500T450G-L

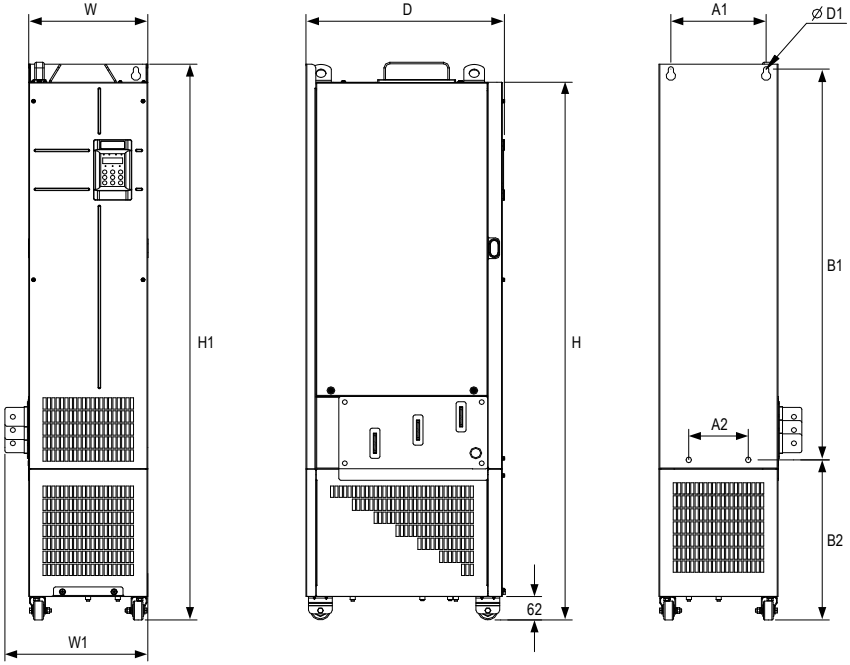

Figure 1-8 Overall and mounting dimensions of MD500T200G-L to MD500T450G-L (with the reactor base)

Table 1-7 Mounting hole dimensions of MD500T200G-L to MD500T450G-L (with the reactor base)

Model	Hole Dimensions (mm)				Overall Dimensions (mm)					Hole Diameter (mm)	Weight (kg)
	A1	A2	B1	B2	H	H1	W	W1	D	D1	
MD500T200G-L	240	150	1035	424	1424	1472	300	360	500	Ø13	160
MD500T220G-L											
MD500T250G-L	225	185	1175	435	1586	1622	330	390	545	Ø13	215
MD500T280G-L											
MD500T315G-L	240	200	1280	432	1683	1733	340	400	545	Ø16	245
MD500T355G-L											
MD500T400G-L											
MD500T450G-L											

2 System Connections

2.1 MD500 System Connection Diagram

When using the AC drive to drive asynchronous motors, a variety of electrical devices must be installed on both input and output sides to ensure system safety and stability. The following figure shows how to configure the AC drive (0.4 kW and above) to operate with the peripheral devices.

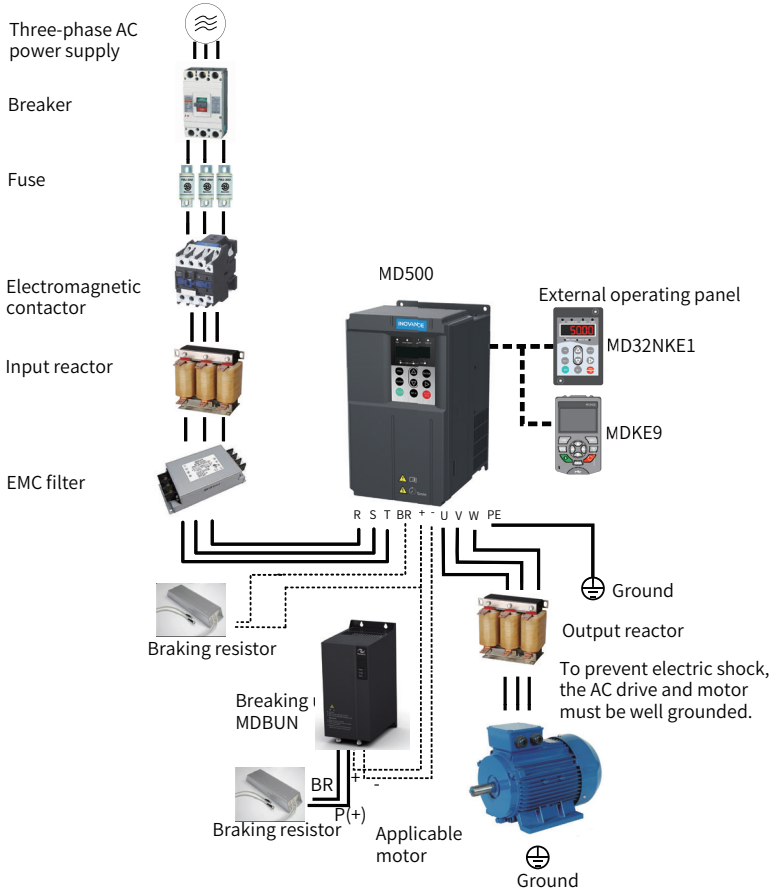

Figure 2-1 MD500 series system composition

NOTE

- The preceding figure is just a schematic system connection diagram of the MD500 series AC drive. For peripherals and options, see "9 Specifications and Model Selection" in 19010355 MD500 Series AC Drive Advanced User Guide.

2.2 MD500 System Structure

Description of peripheral electrical devices in the MD500 series AC drive system

Device	Mounting Location	Function Description
Breaker	Between the power supply and AC drive input side	MCCB: Cuts off power supply when overcurrent occurs on downstream devices. Leakage breaker: Provides protection against potential leakage current during drive running to prevent electric shock and even a fire.
Fuse	Between the power supply and AC drive input side	Provides protection in case of short circuit.
(Electromagnetic) Contactor	Between the breaker and AC drive input side	Switches ON/OFF the AC drive. Do not start/stop the AC drive frequently by switching the contactor ON/OFF (time interval is at least one hour) nor use it to directly start the AC drive.
Input reactor	AC drive input side	Improves the power factor of power input side. Eliminates higher harmonics of the input side effectively and prevents other devices from being damaged due to distortion of voltage waveform. Eliminates input current unbalance caused by inter-phase unbalance.
EMC filter	AC drive input side	Reduces external conduction and radiation interference of the AC drive. Decreases conduction interference flowing from power supply to the AC drive and improve the anti-interference capacity of the AC drive.
Braking resistor	Between the main circuit terminals (+) and BR	Use a braking resistor for the GB-type models. Dissipates regenerative energy during motor deceleration.
Braking unit	Between the main circuit terminals (+) and (-)	Use Inovance's braking unit MDBUN and MDBU and recommended braking resistor for full series except the GB-type model. Dissipates regenerative energy during motor deceleration.
Output reactor	Between the AC drive output side and the motor, close to the AC drive	The output side of the AC drive generally has much higher harmonics. When the motor is far from the AC drive, there is much distributed capacitance in the circuit and certain harmonics may cause resonance in the circuit, which will: 1) Degrade motor insulation performance and damage the motor in long run. 2) Generate large leakage current and cause frequent AC drive protection trips. If the distance between the AC drive and the motor is greater than 100 m, install an AC output reactor.

Device	Mounting Location	Function Description
dv/dt reactor	AC drive output side, close to the AC drive	Optional. Protects motor insulation and reduces bearing current.
Output magnetic ring	AC drive output side, close to the AC drive	Reduces bearing current.
Motor	AC drive output side	Select an appropriate motor.
External operating panel	Interface of the external operating panel	External LED operating panel MD32NKE1 and LCD operating panel MDKE9

NOTE

- Do not install a capacitor or surge protection device (SPD) on the output side of AC drive. Otherwise, the AC drive, capacitor, or SPD may be damaged.
- Inputs/Outputs (main circuit) of the AC drive contain harmonics, which may interfere with the communication device connected to the AC drive. Therefore, install an anti-interference filter to minimize interference.

2.3 Options

Peripherals and options include braking units and function extension cards, as listed in the following table. For use of each option, see its user manual. If you need to purchase the following options, specify the required option in the order.

Table 2-1 Options

Name	Model	Description	Remarks
Built-in braking unit	GB-type	Three phase 380–480 V models: not optional for 0.4–15 kW; optional for 18.5–75 kW Three phase 200–240 V models: not optional for 0.4–7.5 kW, optional for 11–37 kW	-
External braking unit	MDBUN and MDBU	Three phase 380–480 V models: 90 kW and above Three phase 200–240 V models: 45 kW and above	Multiple braking units of 90 kW or above are connected in parallel.
I/O extension card 1	MD38IO1	Provides: ◆ Five extra DI terminals ◆ An analog input (AI3) terminal ◆ A relay output terminal ◆ A digital output terminal ◆ An analog output terminal MODBUS/CANlink supported Can be connected to PT100 and PT1000.	Available for models of 15 kW or above
I/O extension card 2	MD38IO2	Provides three extra DI terminals.	Available for all models

Name	Model	Description	Remarks
I/O extension card 3	MD38IO3	Provides: ◆ Three extra DI terminals ◆ One RS-485 communication signal isolation input terminal ◆ One NO relay output terminal	Available for all models
RS-485 communication card	MD38TX1	Provides the isolated Modbus communication adapter card.	Available for all models
CANlink communication card	MD38CAN1	CANlink communication adapter card	Available for all models
CANopen communication card	MD38CAN2	CANopen communication adapter card	Available for all models
Profbus-DP communication card	MD38DP2	Profbus-DP communication card	Available for models of 15 kW or above
PROFINET communication extension card	MD500-PN1	PROFINET communication adapter card	Available for all models
User programmable card	MD38PC1	User programmable extension card Compatible with H1U-Series PLCs of Inovance	Available for models of 15 kW or above
Differential encoder interface card	MD38PG1	Differential encoder resolver interface card, 5 V power supply	Available for all models
Resolver interface card	MD38PG4	For use with a resolver that has an excitation frequency of 10 kHz The card has a DB9 interface.	Available for all models
Open collector encoder interface card	MD38PG5	Open collector encoder interface card, 1:1 frequency dividing, 15 V power supply	Available for all models
Open collector encoder interface card	MD38PG5D	Open collector encoder interface card, optional multiplying frequency division output, 15 V power supply	Available for all models
Differential encoder interface card	MD38PG6	Differential encoder resolver interface card, 5 V power supply	Available for all models
Differential encoder interface card	MD38PG6D	Differential encoder resolver interface card, optional multiplying frequency division output, 5 V power supply	Available for all models

Name	Model	Description	Remarks
MD38PGMD new multi-functional encoder card	MD38PGMD	◆ Compatible with differential input, open-collector input, and push-pull input ◆ Differential output and open-collector output supported ◆ Compatible with A/B phase input interfaces of often-used encoders and host controllers.	Available for all models
External LED operating panel	MD32NKE1	Connected to the external LED operating panel through the RJ45 interface	Available for the MD series
External LCD operating panel	MDKE9	External LCD display and operating panel	Parameter copy and download supported
Mounting base of the MDKE9 operating panel	CP600-BASE1	-	-
External operating panel cable	MDCAB	Standard: 8 cores Can be connected to MD32NKE1, MD32KC, and MDCP	Standard length: 3 m
Through-hole mounting bracket	MD500-AZJ-A1T*	Used to mount the drive to the middle of the cabinet	Each model has its own bracket. For details, see *"Table 3-1 Through-hole mounting bracket models (three phase 380–480 V)"*.
Cable support bracket	MD500-AZJ-A2T*	Used for secondary fixing of power cables and stable grounding of the shield	For details, see *"Table 3-4 Specification of the cabinet with fans on the top"* in 19010355 MD500 Series AC Drive Advanced User Guide.

2.4 Selection of Cables, Breakers, and Contactors

Table 2-2 Cable selection (three phase 380–480 V)

Model	RST/UVW		Ground Cable		Terminal Width of the AC Drive (mm)	Screw
	Recommended Cable (mm^2) [1]	Recommended Lug Model	Recommended Cable (mm^2) [1]	Recommended Lug Model		
Three phase 380–480 V, 50/60 Hz						
MD500T0.7GB	3 x 0.75	TNR0.75-4	0.75	TNR0.75-4	10.2	M4
MD500T1.1GB	3 x 0.75	TNR0.75-4	0.75	TNR0.75-4	10.2	M4
MD500T1.5GB	3 x 0.75	TNR0.75-4	0.75	TNR0.75-4	10.2	M4
MD500T2.2GB	3 x 0.75	TNR0.75-4	0.75	TNR0.75-4	10.2	M4
MD500T3.0GB	3 x 1	TNR1.25-4	1	TNR1.25-4	10.2	M4
MD500T3.7GB	3 x 1.5	TNR1.25-4	1.5	TNR1.25-4	10.2	M4
MD500T5.5GB	3 x 2.5	TNR2-4	2.5	TNR2-4	10.2	M4
MD500T7.5GB	3 x 4	TNR3.5-5	4	TNR3.5-5	13.0	M5
MD500T11GB	3 x 6	TNR5.5-5	6	TNR5.5-5	13.0	M5
MD500T15GB	3 x 10	TNR8-5	10	TNR8-5	14.3	M5
MD500T18.5G(B)(-T)	3 x 10	GTNR10-6	10	GTNR10-6	15.0	M6
MD500T22G(B)(-T)	3 x 16	GTNR16-6	16	GTNR16-6	15.0	M6
MD500T30G(B)	3 x 16	GTNR16-6	16	GTNR16-6	18.0	M6
MD500T37G(B)	3 x 25	GTNR25-6	16	GTNR16-6	18.0	M6
MD500T45G(B)	3 x 35	GTNR35-8	16	GTNR16-8	26.8	M8
MD500T55G(B)	3 x 50	GTNR50-8	25	GTNR25-8	26.8	M8
MD500T75G(B)	3 x 70	GTNR70-12	35	GTNR35-12	30.6	M12
MD500T90G	3 x 95	GTNR95-12	50	GTNR50-12	30.6	M12
MD500T110G	3 x 120	GTNR120-12	70	GTNR70-12	30.6	M12
MD500T132G	3 x 150	BC150-12	95	BC95-12	*	M12
MD500T160G	3 x 185	BC185-12	95	BC95-12	*	M12
MD500T200G(-L)	2 x (3 x 95)	BC95-12	95	BC95-12	*	M12
MD500T220G(-L)	2 x (3 x 120)	BC120-12	120	BC120-12	*	M12
MD500T250G(-L)	2 x (3 x 120)	BC120-12	120	BC120-12	*	M12
MD500T280G(-L)	2 x (3 x 150)	BC150-12	150	BC150-12	*	M12
MD500T315G(-L)	2 x (3 x 185)	BC185-16	185	BC185-16	*	M16
MD500T355G(-L)	2 x (3 x 185)	BC185-16	185	BC185-16	*	M16
MD500T400G(-L)	2 x (3 x 240)	BC240-16	240	BC240-16	*	M16
MD500T450G(-L)	2 x (3 x 240)	BC240-16	240	BC240-16	*	M16

Table 2-3 Cable selection (Three phase 380–480 V) (with UL certification)

Model	RST/UVW		Ground Cable		Terminal Width of the AC Drive (mm)	Screw
	Recommended Cable (AWG/mil) [2]	Recommended Lug Model	Recommended Cable (AWG/Kcmil)[2]	Recommended Lug Model		
Three phase 380–480 V, 50/60 Hz						
MD500T0.4GB	14	TLK2.5-4	2*14	TLK2.5-4	7.5	M4
MD500T0.7GB	14	TLK2.5-4	2*14	TLK2.5-4	7.5	M4
MD500T1.1GB	14	TLK2.5-4	2*14	TLK2.5-4	7.5	M4
MD500T1.5GB	14	TLK2.5-4	2*14	TLK2.5-4	7.5	M4
MD500T2.2GB	14	TLK2.5-4	2*14	TLK2.5-4	7.5	M4
MD500T3.0GB	14	TLK2.5-4	2*14	TLK2.5-4	7.5	M4
MD500T3.7GB	14	TLK2.5-4	2*14	TLK2.5-4	7.5	M4
MD500T5.5GB	10	TLK6-4	2*10	TLK6-4	10	M4
MD500T7.5GB	10	TLK6-5	2*10	TLK6-5	10	M5
MD500T11GB	8	TLK10-5	2*8	TLK10-5	12	M5
MD500T15GB	6	TLK16-5	6	TLK16-5	12	M5
MD500T18.5G(B)(-T)	6	TLK16-6	6	TLK16-6	12	M6
MD500T22G(B)(-T)	4	TLK25-6	4	TLK25-6	14	M6
MD500T30G(B)	4	TLK25-6	4	TLK25-6	14	M6
MD500T37G(B)	3	TLK35-6	4	TLK25-6	14	M6
MD500T45G(B)	2	TLK35-8	4	TLK25-8	16	M8
MD500T55G(B)	1/0	TLK70-8	3	TLK35-8	17	M8
MD500T75G(B)	3/0	TLK95-12	1	TLK50-12	23	M12
MD500T90G	4/0	TLK120-12	1/0	TLK70-12	23	M12
MD500T110G	300	SQNBS180-12	3/0	TLK95-12	26	M12
MD500T132G	400	TLK240-12	4/0	TLK120-12	28	M12
MD500T160G	500	TLK300-12	250	TLK150-12	31	M12
MD500T200G(-L)	4×1	TLK50-12	2×1	TLK50-12	23	M12
MD500T220G(-L)	4×1/0	TLK70-12	2×1/0	TLK70-12	23	M12
MD500T250G(-L)	4×1/0	TLK70-12	2×1/0	TLK70-12	23	M12
MD500T280G(-L)	4×2/0	TLK70-12	2×2/0	TLK70-12	23	M12
MD500T315G(-L)	4×3/0	TLK95-12	2×3/0	TLK95-12	26	M16
MD500T355G(-L)	4×4/0	TLK120-12	2×4/0	TLK120-12	28	M16
MD500T400G(-L)	4×4/0	TLK120-12	2×4/0	TLK120-12	28	M16
MD500T450G(-L)	4×300	TLK185-12	2×300	TLK185-12	35	M16

Table 2-4 Cable selection (three phase 200–240 V)

Model	RST/UVW		Ground Cable		Terminal Width of the AC Drive (mm)	Screw
	Recommended Cable (mm^2) [1]	Recommended Lug Model	Recommended Cable (mm^2) [1]	Recommended Lug Model		
Three phase 200 V to 240 V, 50/60 Hz						
MD500-2T0.4GB	3 x 0.75	TNR0.75-4	0.75	TNR0.75-4	10.2	M4
MD500-2T0.7GB	3 x 0.75	TNR0.75-4	0.75	TNR0.75-4	10.2	M4
MD500-2T1.1GB	3 x 0.75	TNR0.75-4	0.75	TNR0.75-4	10.2	M4
MD500-2T1.5GB	3 x 1	TNR1.25-4	1	TNR1.25-4	10.2	M4
MD500-2T2.2GB	3 x 1.5	TNR1.25-4	1.5	TNR1.25-4	10.2	M4
MD500-2T3.7GB	3 x 2.5	TNR2-4	2.5	TNR2-4	10.2	M4
MD500-2T5.5GB	3 x 6	TNR5.5-5	6	TNR5.5-5	13.0	M5
MD500-2T7.5GB	3 x 10	TNR8-5	10	TNR8-5	14.3	M5
MD500-2T11G(B)	3 x 16	GTNR16-6	16	GTNR16-6	15.0	M6
MD500-2T15G(B)	3 x 16	GTNR16-6	16	GTNR16-6	18.0	M6
MD500-2T18.5G(B)	3 x 25	GTNR25-6	16	GTNR16-6	18.0	M6
MD500-2T22G(B)	3 x 35	GTNR35-8	16	GTNR16-8	26.8	M8
MD500-2T30G(B)	3 x 50	GTNR50-8	25	GTNR25-8	26.8	M8
MD500-2T37G(B)	3 x 70	GTNR70-12	35	GTNR35-12	30.6	M12
MD500-2T45G	3 x 95	GTNR95-12	50	GTNR50-12	30.6	M12
MD500-2T55G	3 x 120	GTNR120-12	70	GTNR70-12	30.6	M12

NOTE

[1] Suitable for the Chinese standard. "3 x 10" indicates one three-conductor cable, and "2 x (3 x 95)" indicates two three-conductor cables.

[2] Suitable for the American standard. "5" indicates 5AWG, "1/0" indicates 0AWG, "2/0" indicates 00AWG, "3/0" indicates 000AWG, "4/0" indicates 0000AWG, and "2 x 250" indicates two 250 Kcmil cables.

[3] The preceding recommended lugs are the TNR, GTNR, and BC series lugs of Suzhou Yuanli. The lugs with UL certifications are KST's TLK and SQNBS series lugs.

Table 2-5 Contactor and breaker selection (three phase 380–480 V)

AC Drive Model	Recommended Fuse Bussmann (with UL Certification)		Recommended Contactor	Recommended Breaker
	Rated Current (A)	Model	Rated Current (A)	Rated Current (A)
Three phase 380–480 V, 50/60 Hz				
MD500T0.4GB	5	FWP-5B	9	3
MD500T0.7GB	5	FWP-5B	9	4
MD500T1.1GB	10	FWP-10B	9	6
MD500T1.5GB	10	FWP-10B	9	6
MD500T2.2GB	10	FWP-10B	9	10
MD500T3.0GB	15	FWP-15B	12	13
MD500T3.7GB	20	FWP-20B	16	16
MD500T5.5GB	30	FWP-30B	26	25
MD500T7.5GB	40	FWP-40B	26	32
MD500T11GB	60	FWP-60B	38	50
MD500T15GB	70	FWH-70B	50	63
MD500T18.5G(B)(-T)	80	FWH-80B	65	63
MD500T22G(B)(-T)	100	FWH-100B	65	80
MD500T30G(B)	100	FWH-100B	65	80
MD500T37G(B)	125	FWH-125B	80	100
MD500T45G(B)	150	FWH-150B	95	160
MD500T55G(B)	200	FWH-200B	115	160
MD500T75G(B)	250	FWH-250A	150	250
MD500T90G	275	FWH-275A	170	250
MD500T110G	325	FWH-325A	205	250
MD500T132G	400	FWH-400A	245	400
MD500T160G	500	FWH-500A	300	400
MD500T200G(-L)	600	FWH-600A	410	500
MD500T220G(-L)	700	FWH-700A	410	630
MD500T250G(-L)	800	FWH-800A	475	630
MD500T280G(-L)	800	FWH-800A	620	800
MD500T315G(-L)	1000	170M5016	620	800
MD500T355G(-L)	1000	170M5016	620	800
MD500T400G(-L)	1400	170M6017	800	1000
MD500T450G(-L)	1400	170M6017	800	1000

Table 2-6 Contactor and breaker selection (three phase 200–240 V)

AC Drive Model	Recommended Fuse Bussmann (with UL Certification)		Recommended Contactor	Recommended Breaker
	Rated Current (A)	Model	Rated Current (A)	Rated Current (A)
Three phase 200–240 V, 50/60 Hz				
MD500-2T0.4GB	5	FWP-5B	9	4
MD500-2T0.7GB	10	FWP-10B	9	6
MD500-2T1.1GB	10	FWP-10B	9	10
MD500-2T1.5GB	15	FWP-15B	12	13
MD500-2T2.2GB	20	FWP-20B	16	16
MD500-2T3.7GB	30	FWP-30B	26	25
MD500-2T5.5GB	60	FWP-60B	38	50
MD500-2T7.5GB	70	FWH-70B	50	63
MD500-2T11G(B)	100	FWH-100B	65	80
MD500-2T15G(B)	100	FWH-100B	65	80
MD500-2T18.5G(B)	125	FWH-125B	80	100
MD500-2T22G(B)	150	FWH-150B	95	160
MD500-2T30G(B)	200	FWH-200B	115	160
MD500-2T37G(B)	250	FWH-250A	150	250
MD500-2T45G	275	FWH-275A	170	250
MD500-2T55G	325	FWH-325A	205	250

2.5 Selection of the AC Output Reactor

Whether to install an AC output reactor on the power output side is dependent on actual situations. Cable connecting the AC drive and motor cannot be too long. Otherwise, capacitance enlarges and thus high-harmonics current may be easily generated. To avoid these problems, install an AC output reactor close to the AC drive if the cable length is equal to or larger than the values listed in the following table.

Table 2-7 Cable length limit with the output reactor configured (three phase 380–480 V)

AC Drive Power (kW)	Rated Voltage (V)	Minimum Cable Length with Output Reactor Configured (m)	AC Drive Power (kW)	Rated Voltage (V)	Minimum Cable Length with Output Reactor Configured (m)
0.4–4	200–500	50	15	200–500	125
5.5	200–500	70	18.5	200–500	135
7.5	200–500	100	≧ 22	200–500	150
11	200–500	110			

Table 2-8 Cable length limit with the output reactor configured (three phase 200–240 V)

AC Drive Power (kW)	Rated Voltage (V)	Minimum Cable Length with Output Reactor Configured (m)	AC Drive Power (kW)	Rated Voltage (V)	Minimum Cable Length with Output Reactor Configured (m)
0.4–3	200–500	50	7.5	200–500	125
3.7	200–500	70	≧ 11	200–500	150
5.5	200–500	110			

Table 2-9 Recommended models of the AC output reactor (three phase 380–480 V)

AC Drive Model	AC Output Reactor Model (Inovance)	AC Drive Model	AC Output Reactor Model (Inovance)
MD500T0.4GB	MD-OCL-5-1.4-4T-1%	MD500T18.5G(B)(-T)	MD-OCL-50-0.14-4T-1%
MD500T0.7GB	MD-OCL-5-1.4-4T-1%	MD500T22G(B)(-T)	MD-OCL-60-0.12-4T-1%
MD500T1.1GB	MD-OCL-5-1.4-4T-1%	MD500T30G(B)	MD-OCL-80-0.087-4T-1%
MD500T1.5GB	MD-OCL-5-1.4-4T-1%	MD500T37G(B)	MD-OCL-90-0.078-4T-1%
MD500T2.2GB	MD-OCL-7-1.0-4T-1%	MD500T45G(B)	MD-OCL-120-0.058-4T-1%
MD500T3.0GB	MD-OCL-10-0.7-4T-1%	MD500T55G(B)	MD-OCL-150-0.047-4T-1%
MD500T3.7GB	MD-OCL-10-0.7-4T-1%	MD500T75G(B)	MD-OCL-200-0.035-4T-1%
MD500T5.5GB	MD-OCL-15-0.47-4T-1%	MD500T90G	MD-OCL-250-0.028-4T-1%
MD500T7.5GB	MD-OCL-20-0.35-4T-1%	MD500T110G	MD-OCL-250-0.028-4T-1%
MD500T11GB	MD-OCL-30-0.23-4T-1%	MD500T132G	MD-OCL-330-0.021-4T-1%
MD500T15GB	MD-OCL-40-0.18-4T-1%	MD500T160G	MD-OCL-330-0.021-4T-1%

Table 2-10 Recommended models of the AC output reactor (three phase 200–240 V)

AC Drive Model	AC Output Reactor Model (Inovance)	AC Drive Model	AC Output Reactor Model (Inovance)
MD500-2T0.4GB	MD-OCL-5-1.4-4T-1%	MD500-2T11G(B)(-T)	MD-OCL-60-0.12-4T-1%
MD500-2T0.7GB	MD-OCL-5-1.4-4T-1%	MD500-2T15G(B)	MD-OCL-80-0.087-4T-1%
MD500-2T1.1GB	MD-OCL-7-1.0-4T-1%	MD500-2T18.5G(B)	MD-OCL-90-0.078-4T-1%
MD500-2T1.5GB	MD-OCL-10-0.7-4T-1%	MD500-2T22G(22	MD-OCL-120-0.058-4T-1%
MD500-2T2.2GB	MD-OCL-10-0.7-4T-1%	MD500-2T30G(B)	MD-OCL-150-0.047-4T-1%
MD500-2T3.7GB	MD-OCL-15-0.47-4T-1%	MD500-2T37G(B)	MD-OCL-200-0.035-4T-1%
MD500-2T5.5GB	MD-OCL-30-0.23-4T-1%	MD500-2T45G	MD-OCL-250-0.028-4T-1%
MD500-2T7.5GB	MD-OCL-40-0.18-4T-1%	MD500-2T55G	MD-OCL-250-0.028-4T-1%

NOTE

- Use AC output reactors of MD500T200G-L to MD500T450G-L for AC drives MD500T200G to MD500450G.

2.6 Selection of Braking Components

Table 2-11 Braking component selection (three phase 380–480 V)

AC Drive Model	Applicable Motor (kW)	Braking Unit		125% Braking Torque (10% ED, Max. 10s)		Remarks	Minimum Braking Resistance (Ω)
		Model	QTY	Recommended Braking Resistor	QTY		
MD500T0.4GB	0.4	Built-in		80W 1450Ω	1	AC drive models ending with letter "B"	96
MD500T0.7GB	0.75			140W 800Ω	1		96
MD500T1.1GB	1.1			220W 500Ω	1		96
MD500T1.5GB	1.5			300W 380Ω	1		96
MD500T2.2GB	2.2			440W 260Ω	1		64
MD500T3.0GB	3			600W 190Ω	1		64
MD500T3.7GB	3.7			740W 150Ω	1		32
MD500T5.5GB	5.5			1100W 100Ω	1		32
MD500T7.5GB	7.5			1500W 75Ω	1		32
MD500T11GB	11			2200W 50Ω	1		20
MD500T15GB	15			3000W 38Ω	1		20
MD500T18.5G(B)	18.5	Built-in		4000W 32Ω	1	AC drive models ending with letter "B"	24
MD500T22G(B)	22			4500W 27Ω	1		24
MD500T30G(B)	30			6000W 20Ω	1		19.2
MD500T37G(B)	37			7000W 16Ω	1		14.8
MD500T45G(B)	45			9000W 13Ω	1		12.8
MD500T55G(B)	55			11000W 10.5Ω	1		9.6
MD500T75G(B)	75			15000W 7.7Ω	1		6.8
MD500T90G	90	MDBUN-60-T	2	9000W 10.0Ω	2	Input voltage ≤ 440 VAC	9.3×2
	90	MDBUN-60-5T	2	9000W 12.8Ω	2	Input voltage > 440 VAC	10.5×2
MD500T110G	110	MDBUN-60-T	2	11000W 9.4Ω	2	Input voltage ≤ 440 VAC	9.3×2
	110	MDBUN-60-5T	2	11000W 10.5Ω	2	Input voltage > 440 VAC	10.5×2
MD500T132G	132	MDBUN-90-T	2	13000W 6.8Ω	2	Input voltage ≤ 440 VAC	6.2×2
	132	MDBUN-90-5T	2	13000W 8.8Ω	2	Input voltage > 440 VAC	7.0×2
MD500T160G	160	MDBUN-90-T	2	16000W 6.3Ω	2	Input voltage ≤ 440 VAC	6.2×2
	160	MDBUN-90-5T	2	16000W 7.2Ω	2	Input voltage > 440 VAC	7.0×2

AC Drive Model	Applicable Motor (kW)	Braking Unit		125% Braking Torque (10% ED, Max. 10s)		Remarks	Minimum Braking Resistance (Ω)
		Model	QTY	Recommended Braking Resistor	QTY		
MD500T200G(-L)	200	MDBU-200-B	2	19000W 4.5Ω	2	Input voltage ≤ 440 VAC	2.5×2
	200	MDBU-200-C	2	19000W 5.8Ω	2	Input voltage > 440 VAC	3.0×2
MD500T220G(-L)	220	MDBU-200-B	2	21000W 4.1Ω	2	Input voltage ≤ 440 VAC	2.5×2
	220	MDBU-200-C	2	21000W 5.3Ω	2	Input voltage > 440 VAC	3.0×2
MD500T250G(-L)	250	MDBU-200-B	2	24000W 3.6Ω	2	Input voltage ≤ 440 VAC	2.5×2
	250	MDBU-200-C	2	24000W 4.6Ω	2	Input voltage > 440 VAC	3.0×2
MD500T280G(-L)	280	MDBU-200-B	2	27000W 3.2Ω	2	Input voltage ≤ 440 VAC	2.5×2
	280	MDBU-200-C	2	27000W 4.1Ω	2	Input voltage > 440 VAC	3.0×2
MD500T315G(-L)	315	MDBU-200-B	3	20000W 4.3Ω	3	Input voltage ≤ 440 VAC	2.5×3
	315	MDBU-200-C	3	20000W 5.5Ω	3	Input voltage > 440 VAC	3.0×3
MD500T355G(-L)	355	MDBU-200-B	3	23000W 3.8Ω	3	Input voltage ≤ 440 VAC	2.5×3
	355	MDBU-200-C	3	23000W 4.9Ω	3	Input voltage > 440 VAC	3.0×3
MD500T400G(-L)	400	MDBU-200-B	3	26000W 3.4Ω	3	Input voltage ≤ 440 VAC	2.5×3
	400	MDBU-200-C	3	26000W 4.3Ω	3	Input voltage > 440 VAC	3.0×3
MD500T450G(-L)	450	MDBU-200-B	3	29000W 3.0Ω	3	Input voltage ≤ 440 VAC	2.5×3
	450	MDBU-200-C	3	29000W 3.9Ω	3	Input voltage > 440 VAC	3.0×3

Table 2-12 Braking component selection (three phase 200–240 V)

AC Drive Model	Applicable Motor (kW)	Braking Unit		125% Braking Torque (10% ED, Max. 10s)		Remarks	Minimum Braking Resistance (Ω)
		Model	QTY	Recommended Braking Resistor	QTY		
MD500-2T0.4GB	0.4	Built-in		90W 300Ω	1	AC drive models ending with letter "B"	48
MD500-2T0.7GB	0.7			160W 170Ω	1		48
MD500-2T1.1GB	1.1			250W 110Ω	1		32
MD500-2T1.5GB	1.5			340W 80Ω	1		32
MD500-2T2.2GB	2.2			500W 55Ω	1		16
MD500-2T3.7GB	3.7			800W 33Ω	1		16
MD500-2T5.5GB	5.5			1300W 22Ω	1		10
MD500-2T7.5GB	7.5			1700W 16Ω	1		10
MD500-2T11G(B)	11	Built-in		2300W 12Ω	1	AC drive models ending with letter "B"	12
MD500-2T15G(B)	15			3000W 9Ω	1		9
MD500-2T18.5G(B)	18.5			3900W 7Ω	1		7
MD500-2T22G(B)	22			4600W 6Ω	1		6
MD500-2T30G(B)	30			5500W 5Ω	1		5
MD500-2T37G(B)	37			6800W 4Ω	1		4
MD500-2T45G	45	MDBUN-60-2T	2	5000W 5.4Ω	2	-	4.9
MD500-2T55G	55	MDBUN-60-2T	2	6000W 4.4Ω	2	-	4

NOTE

- The minimum braking resistance in the preceding table supports the operating condition with ED of 10% and the longest time for single braking of 10s.
- The default initial braking voltage for built-in braking units is 760 V and 350 V when the input voltage is 380 to 480 VAC and 200 to 240 V, respectively.
- The default initial braking voltage is 670 V for MDBUN-60-T, MDBUN-90-T, and MDBU-200-B when the input voltage is lower than or equal to 440 VAC, and 760 V for MDBUN-60-5T, MDBUN-90-5T, and MDBU-200-C when the input voltage is above 440 VAC. The resistance of the braking resistor can be adjusted with the initial braking voltage.
- The preceding table is for reference only. You can select the resistance and power of the braking resistor as required (the resistance cannot be lower than the reference value while the power may be higher than the reference value). Selection of the braking resistor model is determined by the generation power of motors and is also related to the system inertia, deceleration time and potential energy load. For systems with high inertia, and/or short deceleration time, and/or frequent braking, select a braking resistor with higher power and lower resistance.

2.7 External Operating Panels

1) External LED operating panel MD32NKE1

MD32NKE1 is an external operating panel applicable to the AC drive. It adopts the LED display and has the same operation mode as the operating panel on the AC drive. For details, see *"4 Panel Operations"*. It is optional and easy for commissioning.

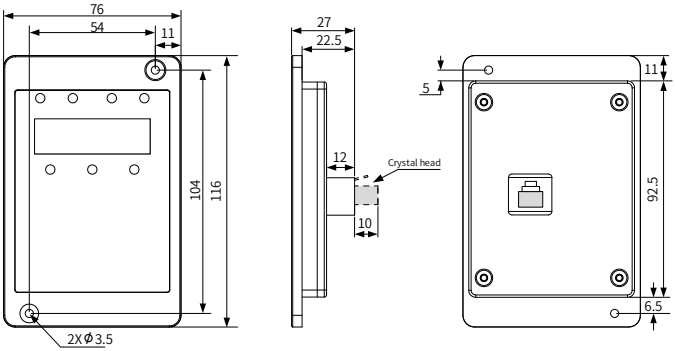

Figure 2-2 Mounting dimensions of MD32NKE1 (unit: mm)

2) External LCD operating panel MDKE9

MDKE9 is an optional external LCD keypad. It supports copy, download, and modification of all parameters and is easy to use in both Chinese and English. The following figure shows its appearance and keys. (For details, see *"4 Panel Operations"* in 19010355 MD500 Series AC Drive Advanced User Guide.)

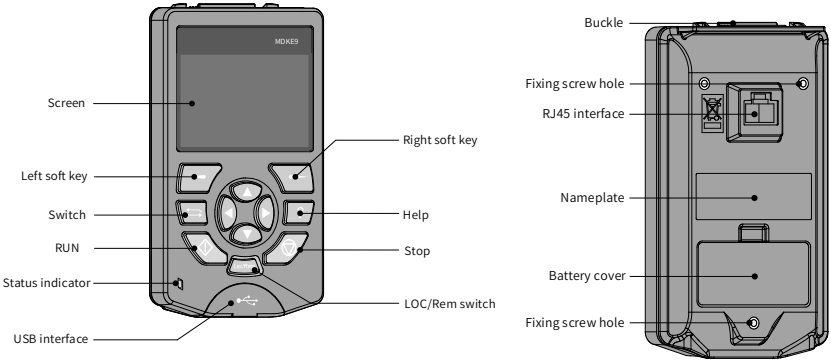

Figure 2-3 Appearance of the MDKE9 external operating panel

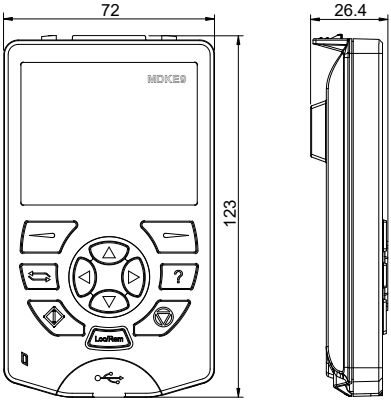

Figure 2-4 Mounting dimensions of the MDKE9 external operating panel (unit: mm)

3) MDKE9 mounting base

Before installing the MDKE9 operating panel on the cabinet door, install the CP600-BASE1 (optional) base first. The mounting dimensions are shown below.

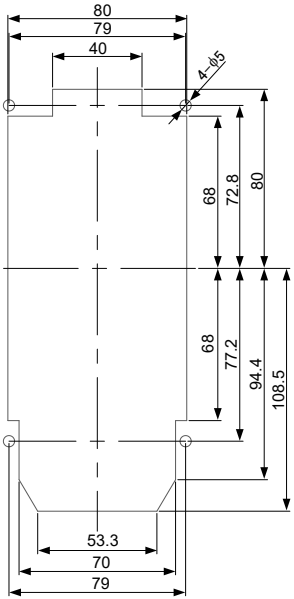

Figure 2-5 Sheet metal slot dimensions (unit: mm)

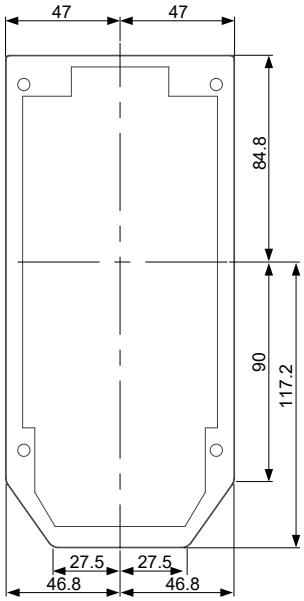

Figure 2-6 Mounting base dimension limits (unit: mm)

3 Installation and Wiring

3.1 Installation

3.1.1 Installation Environment

1) Ambient temperature: The AC drive's service life is greatly influenced by the ambient temperature. Do not run the AC drive under a temperature exceeding the allowed temperature range (-10°C to +50°C).

2) Install the AC drive on the surface of a flame retardant object, and ensure that sufficient space is left around the enclosure to allow for efficient heat dissipation. The AC drive generates great heat during working. Use screws to install the AC drive on the mounting bracket vertically.

3) Install the AC drive without strong vibration. Ensure that the mounting location is not affected by levels of vibration that exceeds 0.6 G. Keep the AC drive away from punch machines.

4) Ensure that the mounting location is away from direct sunlight, damp or water drops.

5) Ensure that the mounting location is protected against corrosive, combustible or explosive gases and vapors.

6) Ensure that the mounting location is free from oil and dust.

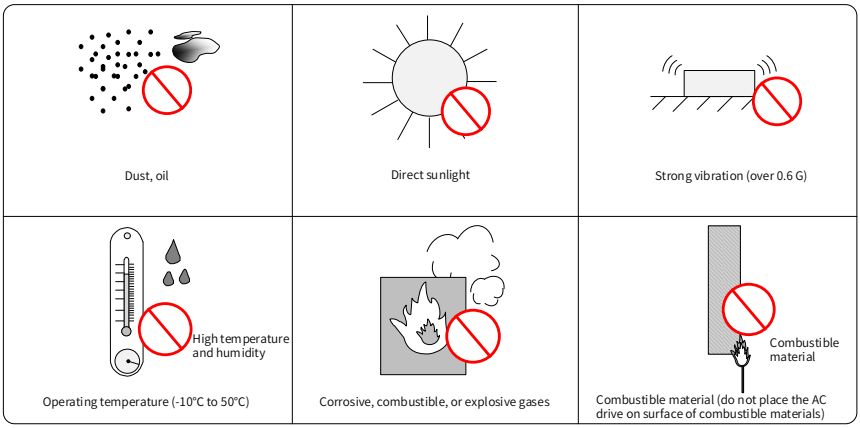

Figure 3-1 Installation environment requirements

7) The AC drive must be installed in a fireproof cabinet with doors that provide effective electrical and mechanical protection. The installation must conform to local and regional laws and regulations, and to relevant IEC requirements.

3.1.2 Backplate Mounting and Through-Hole Mounting

1) Backplate mounting

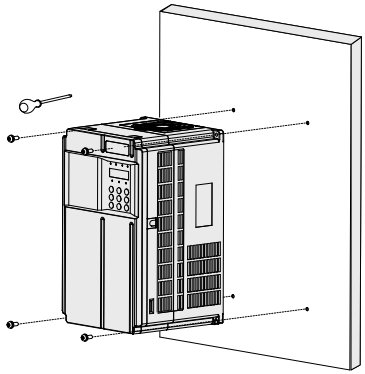

Figure 3-2 Backplate mounting of MD500T0.4GB to MD500T37G(B) and MD500-2T0.4GB to MD500-2T18.5G(B)

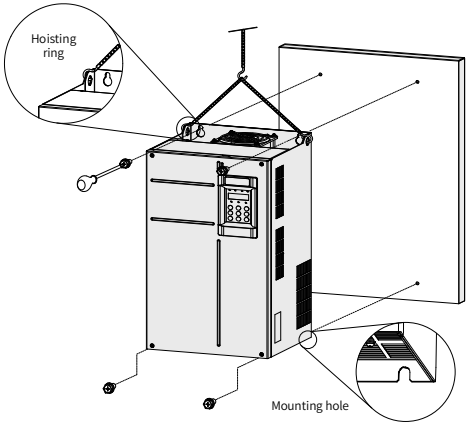

Figure 3-3 Backplate mounting of MD500T45G(B) to MD500T160G and MD500-2T22G(B) to MD500-2T55G

NOTE

- In this mode, do not just secure two screws on the top of the AC drive; otherwise, the AC drive may fall off or be damaged due to the unbalanced effect on the fixed part during long-time running.

2) Through-hole mounting

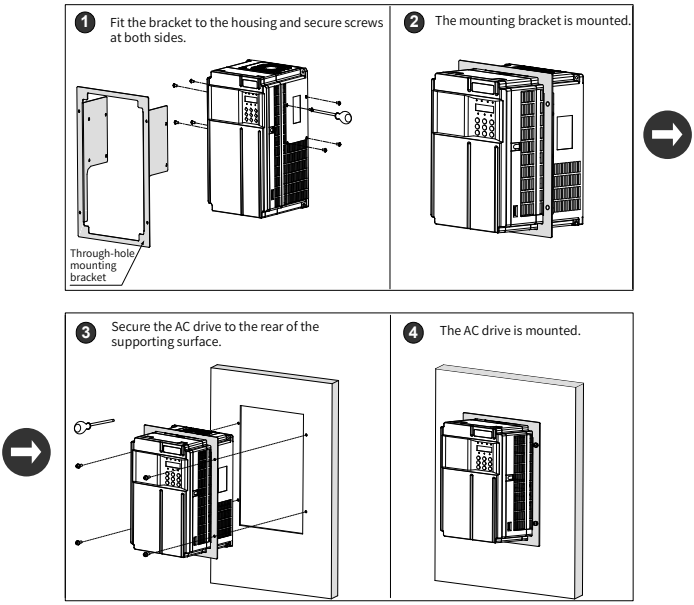

Figure 3-4 Through-hole mounting of MD500T0.4GB to MD500T37G(B) and MD500-2T0.4GB to MD500-2T18.5G(B)

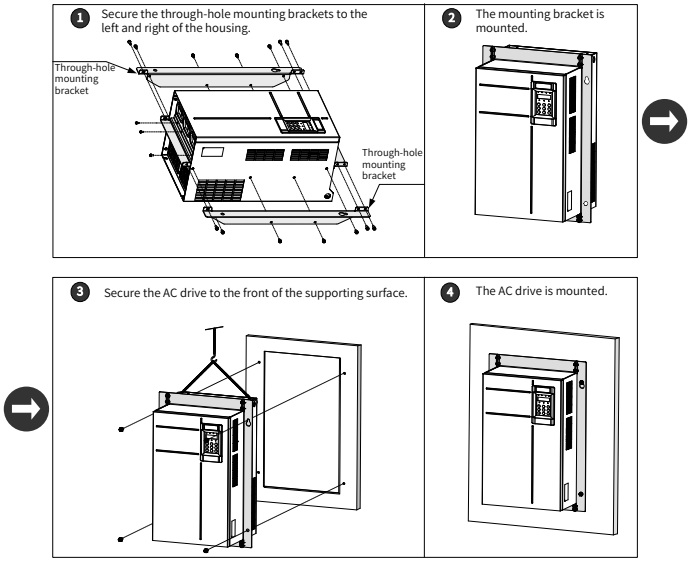

Figure 3-5 Through-hole mounting of MD500T45G(B) to MD500T160G and MD500-2T22G(B) to MD500-2T55G

3) Through-hole mounting brackets

Table 3-1 Through-hole mounting bracket models (three phase 380–480 V)

Through-hole Mounting Bracket Model	AC Drive Model	Through-hole Mounting Bracket Model	AC Drive Model
MD500-AZJ-A1T1	MD500T0.4GB	MD500-AZJ-A1T5	MD500T18.5G(B)(-T)
	MD500T0.7GB		MD500T22G(B)(-T)
	MD500T1.1GB	MD500-AZJ-A1T6	MD500T30G(B)
	MD500T1.5GB		MD500T37G(B)
	MD500T2.2GB	MD500-AZJ-A1T7	MD500T45G(B)
	MD500T3.0GB		MD500T55G(B)
MD500-AZJ-A1T2	MD500T3.7GB	MD500-AZJ-A1T8	MD500T75G(B)
	MD500T5.5GB		MD500T90G
MD500-AZJ-A1T3	MD500T7.5GB		MD500T110G
	MD500T11GB	MD500-AZJ-A1T9	MD500T132G
MD500-AZJ-A1T4	MD500T15GB		MD500T160G

Table 3-2 Through-hole mounting bracket models (three phase 200–240 V)

Through-hole Mounting Bracket Model	AC Drive Model	Through-hole Mounting Bracket Model	AC Drive Model
MD500-AZJ-A1T1	MD500-2T0.4GB	MD500-AZJ-A1T5	MD500-2T11G(B)
	MD500-2T0.7GB	MD500-AZJ-A1T6	MD500-2T15G(B)
	MD500-2T1.1GB		MD500-2T18.5G(B)
	MD500-2T1.5GB	MD500-AZJ-A1T7	MD500-2T22G(B)
MD500-AZJ-A1T2	MD500-2T2.2GB		MD500-2T30G(B)
	MD500-2T3.7GB	MD500-AZJ-A1T8	MD500-2T37G(B)
MD500-AZJ-A1T3	MD500-2T5.5GB		MD500-2T45G
MD500-AZJ-A1T4	MD500-2T7.5GB		MD500-2T55G

3.1.3 Mounting in the Cabinet

1) Ventilation

Only one AC drive of models MD500T200G to MD500T450G can be mounted in a cabinet and ventilation space must be considered. Follow the following guidance for specific model and application scenarios.

■ Direct discharging cabinet (without fans on the top)

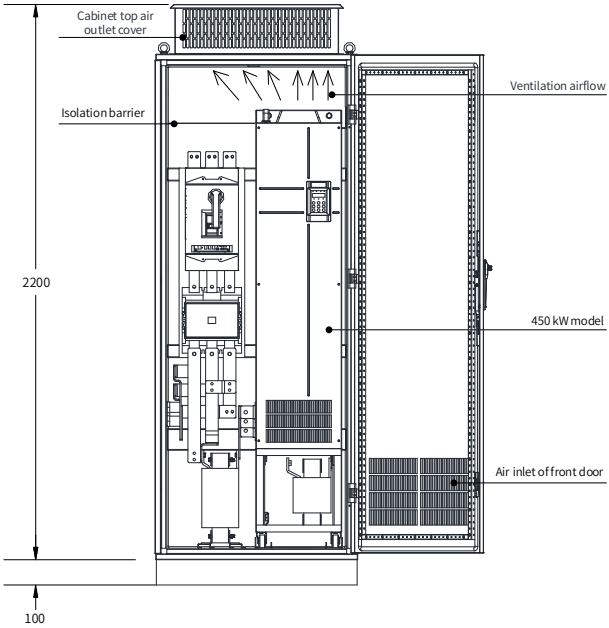

Figure 3-6 Direct discharging cabinet

Table 3-3 Specification of the direct discharging cabinet

AC Drive Model	Quantity of Fans	Total Air Volume (CFM)	Effective Area of Cabinet Top Air Inlet (mm^2)	Effective Area of Cabinet Top Air Outlet (mm^2)
MD500T132G	2	541	31809	50894
MD500T160G	2	620	31809	50894
MD500T200G(-L)	2	586	31809	50894
MD500T220G(-L)	2	722	31809	50894
MD500T250G(-L)	3	789	47713	76341
MD500T280G(-L)	3	882	47713	76341
MD500T315G(-L)	3	644	47713	76341
MD500T355G(-L)	3	796	47713	76341
MD500T400G(-L)	3	796	47713	76341
MD500T450G(-L)	3	796	47713	76341

Note:
- ◆ CFM = 0.0283 m^3/min
- ◆ "Effective Area" indicates the through-hole area.

■ Cabinet with fans on the top

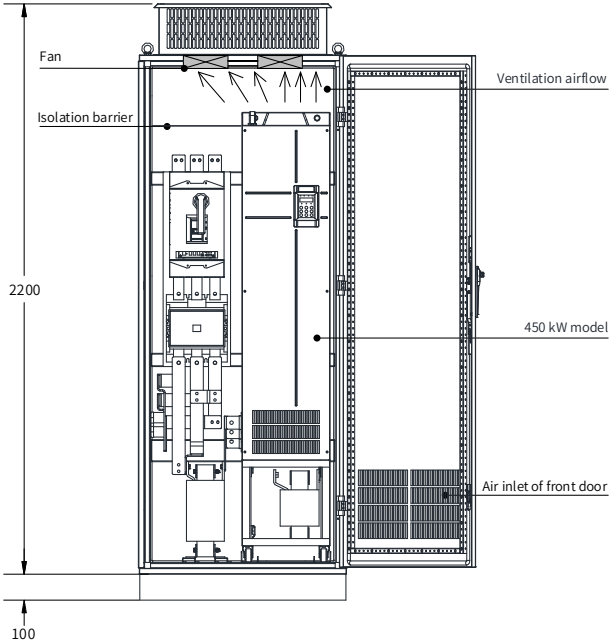

Figure 3-7 Cabinet with fans on the top

Table 3-4 Specification of the cabinet with fans on the top

AC Drive Model	Quantity of Fans	Total Air Volume (CFM)	Effective Area of Cabinet Top Air Inlet (mm^2)	Max. Air Volume Required by the Top Fan (CFM)	Effective Area of Cabinet Top Air Outlet (mm^2)
MD500T132G	2	541	31809	649	S = 0.942 x N x (Dout2 - DHUB2) In the preceding formula, N indicates the number of top fans, Dout indicates the diameter of the top fan, and DHUB indicates the diameter of the top fan center HUB.
MD500T160G	2	620	31809	744	
MD500T200G(-L)	2	586	31809	703	
MD500T220G(-L)	2	722	31809	866	
MD500T250G(-L)	3	789	47713	947	
MD500T280G(-L)	3	882	47713	1058	
MD500T315G(-L)	3	644	47713	773	
MD500T355G(-L)	3	796	47713	955	
MD500T400G(-L)	3	796	47713	955	
MD500T450G(-L)	3	796	47713	955	

Note:
- ◆ CFM = 0.0283 m^3/min
- ◆ "Effective Area" indicates the through-hole area.

3.2 Wiring

3.2.1 Standard Wiring Diagram

As shown in the following figure, the wiring part marked by the double-headed arrow in 0.4 to 75 kW/0.4 to 37 kW models is different from that in 90 to 450 kW/45 to 55 kW models.

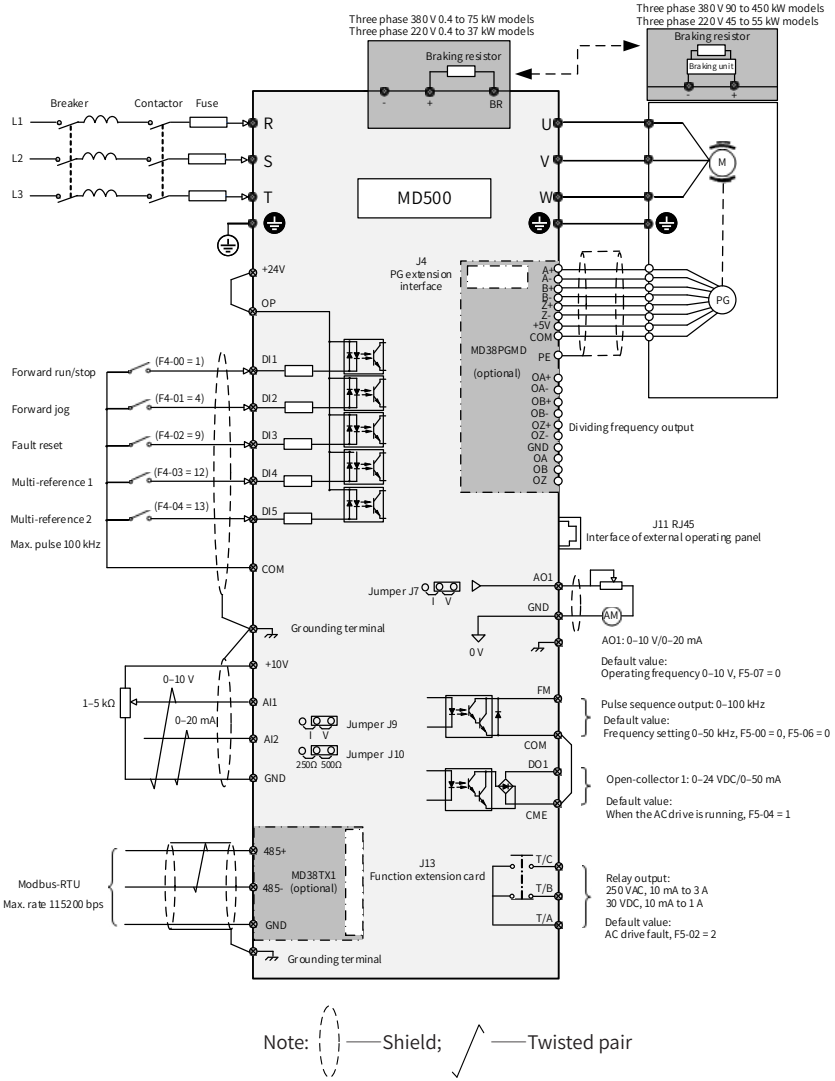

Figure 3-8 Typical wiring

3.2.2 Main Circuit Terminals

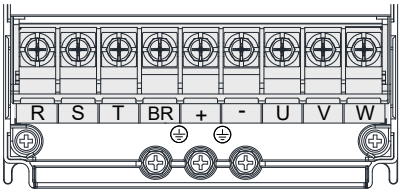

Figure 3-9 Terminal arrangement in MD500T0.4GB to MD500T15GB and MD500-2T0.4GB to MD500-2T7.5GB

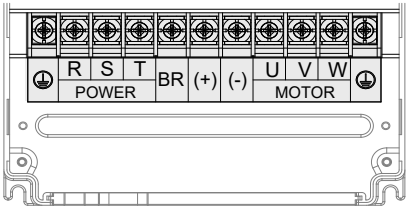

Figure 3-10 Terminal arrangement in MD500T18.5G(B) to MD500T160G and MD500T11G(B) to MD500T55G

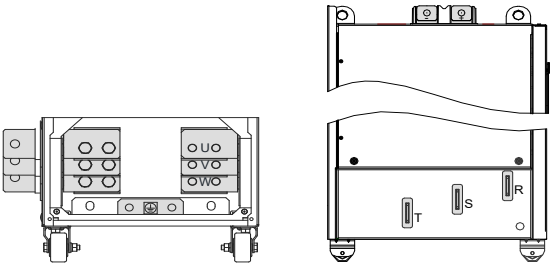

(Front view) (Side view)

Figure 3-11 Terminal arrangement in MD500T200G(-L) to MD500T450G(-L)

Table 3-5 Description of main circuit terminals

Terminal	Name	Description
R, S, T	Three-phase power supply input terminals	Connected to AC input three-phase power supply.
(+), (-)	DC bus positive and negative terminals	Common DC bus input, connected to the external braking unit for AC drives of 90 kW and above
(+), BR	Braking resistor connection terminals	Connected to the external braking resistor for AC drive of 75 kW and below

Terminal	Name	Description
U, V, W	AC drive output terminals	Connected to a three-phase motor
⏚	Ground (PE) terminal	Grounding connection

3.2.3 Control Circuit Terminals

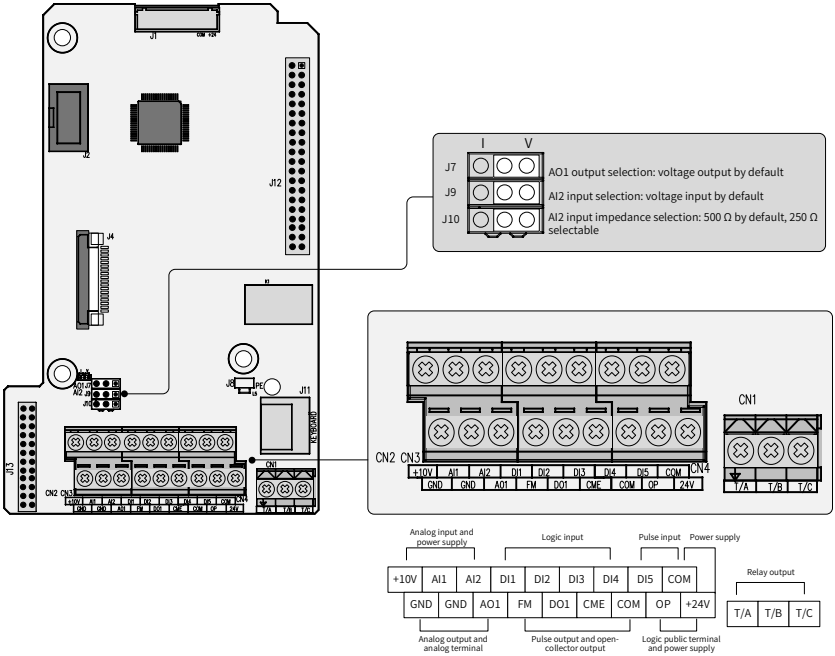

Figure 3-12 Control circuit terminal arrangement

Table 3-6 Description of control circuit terminals

Type	Terminal Mark	Terminal Name	Description
Power supply	+10 V-GND	+10 V power supply	Provides +10 V power supply to an external unit. Its maximum output current is 10 mA. Generally used to supply an external potentiometer of 1 to 5 kΩ
	+24V-COM	+24 V power supply	Provides +24 V power supply to an external unit. Generally used for power supply for DI/DO terminals and external sensors. Maximum output current: 200 mA [1]
	OP	Input terminal for external power supply	Connected to +24 V by default. When DI1 to DI5 need to be driven by external signals, OP must be disconnected from + 24 V and connected to an external power supply.
Analog input	AI1-GND	Analog input 1	Voltage range of inputs: 0 to 10 VDC Input impedance: 22 kΩ
	AI2-GND	Analog input 2	Either a voltage or current input, determined by jumper J9 Input voltage range: 0 to 10 VDC Input current range: 0 to 20 mA Input impedance: 22 kΩ (voltage input), 500 Ω or 250 Ω (current input) decided byJ10 [2]
Digital input	DI1- OP	Digital input 1	Optically-coupled isolation compatible with dual-polarity inputs Input impedance: 1.39 kΩ Voltage range for inputs: 9 to 30 V
	DI2- OP	Digital input 2	
	DI3- OP	Digital input 3	
	DI4- OP	Digital input 4	
	DI5- OP	High-speed pulse input	In addition to having the same features as DI1 to DI4, DI5 can also be used for high-speed pulse inputs. Maximum input frequency: 100 kHz Input impedance: 1.03 kΩ
Analog output	AO1-GND	Analog output 1	Either a voltage or current output, determined by jumper J7. Output voltage range: 0 to 10 V Output current range: 0 to 20 mA
Digital output	DO1-CME	Digital output 1	Optically-coupled isolation, dual-polarity open-collector output Output voltage range: 0 to 24 V Output current range: 0 to 50 mA Note that CME and COM are internally insulated, but are shorted externally by a jumper. In this case, DO1 is driven by +24 V by default. Remove the jumper link if you need to apply external power to DO1.
	FM- COM	High-speed pulse output	Controlled by F5-00 (FM terminal output selection). Maximum output frequency: 100 kHz When used as an open-collector output, the specification is the same as for DO1.

Type	Terminal Mark	Terminal Name	Description
Relay output	T/A-T/B	Normally-closed (NC) terminal	Contact driving capacity: 250 VAC, 3 A, Cos Φ = 0.4 30 VDC, 1 A
	T/A-T/C	Normally-open (NO) terminal	
Auxiliary interfaces	J13	Extension card interface	Interface for the 28-core terminal and optional cards (I/O extension card, PLC card, and various bus cards)
	J4	PG card interface	The open-collector, differential, and resolver interfaces are selectable options.
	J11	External operating panel interface	Connected to an external operating panel.
Jumper [3]	J7	AO1 output selection	Either a voltage or a current output. Voltage output by default
	J9	AI2 input selection	Either a voltage or a current input. Voltage input by default
	J10	AI2 input impedance selection	Either 500 Ω or 250 Ω input. 500 Ω input by default

[1] When the ambient environment is above 23°C , the output current must be de-rated for 1.8 mA per 1°C rise. The maximum output current is 170 mA at 40°C . When OP is shorted to 24 V, the current of the DI must also be considered.

[2] Select 500 Ω or 250 Ω input impedance according to the with-load capacity of signal source. For example, if 500 Ω is selected, the maximum output voltage of signal source cannot be smaller than 10 V so that AI2 can measure 20 mA current.

[3] For positions of jumpers J7, J9 and J10, see Figure 3-12.

4 Panel Operations

4.1 Introduction

The LED operating panel allows you to set and modify parameters, monitor system status, and start or stop the AC drive. For details, see "4 Panel Operation" in 19010355 MD500 Series AC Drive Advanced User Guide. An external LED (MD32NKE1) or LCD (MDKE9) operating panel is also available as an option. For details, see "2.7 External Operating Panels".

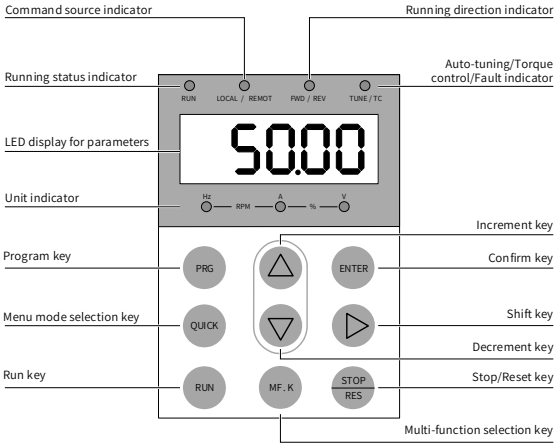

Figure 4-1 Details of the operating panel

4.2 Keys on the Operating Panel

Table 4-1 Function of keys on the operating panel

Key	Name	Function
PRG	Programming	Enter or exit Level I menu.
ENTER	Enter	Enter each level of menu interface and confirm displayed parameter setting.
△	Increment	Increase the displayed value when editing a parameter value.
▽	Decrement	Decrease the displayed value when editing a parameter value.
▷	Shift	Select the displayed parameter in the STOP or RUNNING status. Select the digit to be modified when modifying a parameter value.
RUN	RUN	Start the AC drive when using the operating panel control mode.

Key	Name	Function
STOP RES	Stop/Reset	Stop the AC drive when the AC drive is in the RUNNING status. Perform a reset operation when the AC drive is in the FAULT status.
MF.K	Multifunction	Perform a function switchover as defined by the setting of F7-01 (MF.K key function selection).
QUICK	Menu mode selection	Switch over between menu modes as defined by the setting of FP-03 (Selection of individualized parameter display).

4.3 Indicators on the Operating Panel

indicates that the light turns on, indicates that the light turns off, and indicates that the light flashes.

Table 4-2 Indicators on the operating panel

State		Indication
RUN Running status indicators	RUN	OFF indicates the STOP status.
	RUN	ON indicates the RUNNING status.
LOCAL/REMOT Running command indicators	LOCAL/ REMOT	OFF indicates under operating panel control.
	LOCAL/ REMOT	ON indicates under terminal control.
	LOCAL/ REMOT	FLASHING indicates under serial communication control.
FWD/REV Forward and reverse rotation indicators	FWD/ REV	OFF indicates forward motor rotation.
	FWD/ REV	ON indicates reverse motor rotation.
TUNE/TC Auto-tuning, torque control and fault indicators	TUNE/ TC	OFF indicates that the AC drive is normal.
	TUNE / TC	ON indicates the torque control mode.
	TUNE/TC	FLASHING SLOWLY (once a second) indicates auto-tuning status.
	TUNE/TC	FLASHING QUICKLY (four times a second) indicates a fault condition.
Hz — RPM — A — % — V		Hz for frequency
Hz — RPM — A — % — V		A for current
Hz — RPM — A — % — V		V for voltage
Hz — RPM — A — % — V		RPM for motor speed

State	Indication
Hz — RPM — A — % — V	Percentage

5 Basic Operations and Trial Run

5.1 Quick Commissioning

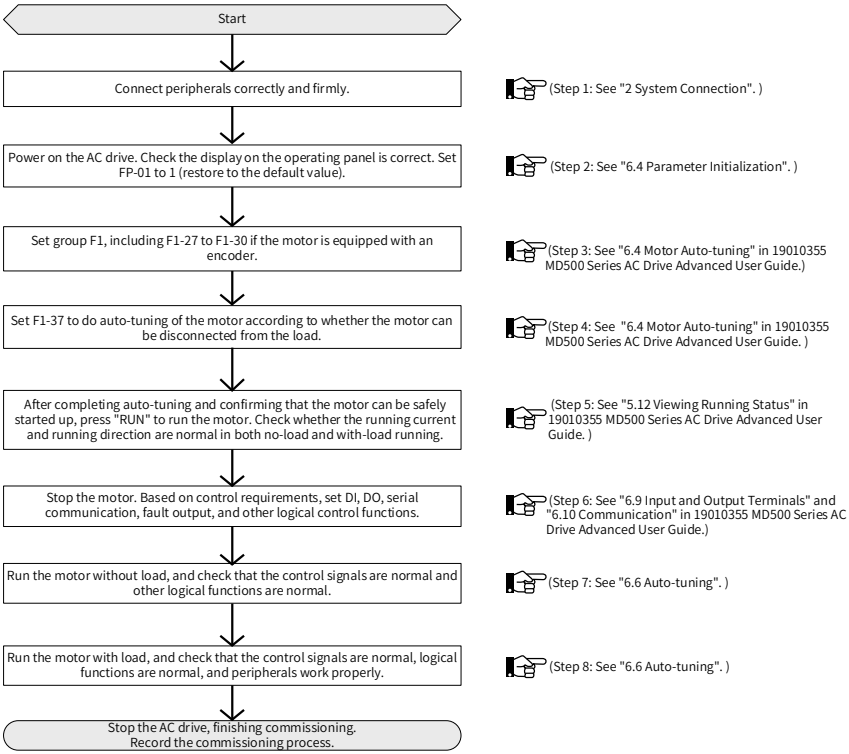

Figure 5-1 Quick commissioning

5.2 Precautions Before Power-on

Be sure to check the following items before powering on the AC drive.

Item	Description
Voltage	The voltage is AC 380 to 480 V or 220 to 240 V and 50/60 Hz.
	The input terminals R, S, and T are correctly connected.
	The AC drive is connected to the motor properly.
Connection of AC drive output terminals and motor terminals	The AC drive output terminals U, V, and W are firmly connected to the motor terminals.

Item	Description
Connection of terminals in the control circuit	Terminals of the control circuit are firmly connected to other control devices.
Status of control terminals	All terminals of the control circuit are OFF (the AC drive is not running).
Load	The motor is idle and not connected to the mechanical system.

5.3 Status Display After Power-on

The following table lists the display on the operating panel after the AC drive is powered on.

State	Display	Description
Normal	50.00	Default value 50.00 Hz is displayed.
Fault	Err02	The AC drive stops and displays an error code.

5.4 Parameter Initialization

You can restore the AC drive to factory parameters. After initialization, FP-01 is automatically reset to 0.

FP-01	Parameter initialization		Default	0
	Setting Range	0	No operation	
		1	Restore factory parameters except motor parameters	
		2	Clear records	
		4	Back up current user parameters	
		501	Restore user backup parameters	

1: Restore factory parameters except motor parameters

When FP-01 is set to 1, most of the parameters are restored to the factory default settings. However, motor parameters, F0-22 (Frequency reference resolution), error records, F7-09 (Accumulative running time), F7-13 (Accumulative power-on time), F7-14 (Accumulative power consumption), and F7-07 (Heatsink temperature of AC drive) cannot be restored.

2: Clear records

Error records, F7-09 (Accumulative running time), F7-13 (Accumulative power-on time), and F7-14 (Accumulative power consumption) are cleared.

4: Back up current user parameters

Parameters set by the current user are backed up. Values of all the current function parameters are backed up for restoration after an error caused by parameter adjustment

occurs.

501: Restore user backup parameters

Restore parameters backed up by setting FP-01 to 4.

5.5 Motor Control Modes

Parameter	Description	Scenario
F0-01: Motor control mode	F0-01 = 0: SVC	It indicates the SVC mode. It is applicable for common high-performance control scenarios in which one AC drive can drive only one motor, for example, machine tool, centrifuge, drawing machine, and injection molding machine.
	F0-01 = 1: FVC	It indicates the FVC mode. The motor must be equipped with an encoder and the AC drive must be equipped with a PG card in the same type of the encoder. It is applicable to scenarios requiring high precision speed or torque control. One AC drive can drive only one motor, for example, high-speed papermaking machine, crane, and elevator.
	F0-01 = 2: V/F control	It is applicable to scenarios having no requirement on load (fans and pumps) or using one drive to drive multiple motors.

5.6 Auto-tuning

You can obtain parameters of a controlled motor through motor auto-tuning. Motor auto-tuning methods include dynamic auto-tuning, static auto-tuning 1, and static auto-tuning 2. You can enter the motor parameters manually.

Auto-tuning Method	Application	Result
Dynamic no-load auto-tuning F1-37 = 2	It is applied to applications where motors can be disconnected from the load.	Best
Dynamic auto-tuning with load F1-37 = 2	It is applied to applications where motors cannot be disconnected from the load. The load friction force is small and the motor is appropriately idle when running at a constant speed. The effect is better with a smaller friction force.	Better
Static auto-tuning 1 F1-37 = 1	It is applied to applications where motors cannot be disconnected from the load and dynamic auto-tuning is not allowed.	Good
Static auto-tuning 2 F1-37 = 3	It is applied to applications where motors cannot be disconnected from the load and dynamic auto-tuning is not allowed. This mode is recommended for static auto-tuning. It lengthens the auto-tuning time compared to static auto-tuning 1.	Better
Manual parameter input	It is applied to applications where motors cannot be disconnected from the load. Copy parameters of motors of the same model which have been auto-tuned to F1-00 (Motor type selection) to F1-10 (No-load current).	Better

Auto-tuning methods are described below.

Motor 1 is used to describe motor auto-tuning methods. If you need to perform auto-tuning on motor 2, set F0-24 (Motor parameter group selection) to 1 (Motor parameter group 2).

Step 1: If the motor can be disconnected from the load, cut off the power, and disconnect the motor from the load to have the motor run without load.

Step 2: Power on the AC drive. Set F0-02 (Running command selection) to 0 (Serial communication) to select the operating panel as the running command.

Step 3: Input motor nameplate parameters (F1-00 to F1-05) correctly. Set the following parameters according to the motor:

Motor	Parameter
Motor 1	F1-00: Motor type selection F1-01: Rated motor power F1-02: Rated motor voltage F1-03: Rated motor current F1-04: Rated motor frequency F1-05: Rated motor speed
Motor 2	A2-00 (Motor type selection) to A2-05 (Rated motor speed) have the same definition.

If there is an encoder, set F1-27 (Encoder pulses per revolution), F1-28 (Encoder type), and F1-30 (A/B phase sequence of ABZ incremental encoder).

Step 4: For an asynchronous motor, set F1-37 (Auto-tuning selection) (A2-37 in case of Motor 2) to 2 (Asynchronous motor dynamic auto-tuning) and press ENTER. "TUNE" is displayed, as shown in the following figure:

Press RUN on the operating panel. The AC drive drives the motor to accelerate/decelerate and run in forward/reverse direction. The RUN indicator becomes ON and auto-tuning lasts for about 2 minutes. After the preceding display disappears and the operating panel returns to normal parameter display state, auto-tuning is completed.

After auto-tuning, the following motor parameters are calculated:

Motor	Parameter
Motor 1	F1-06: Stator resistance F1-07: Rotor resistance F1-08: Leakage inductive reactance F1-09: Mutual inductive reactance F1-10: No-load current
Motor 2	A2-06 to A2-10 have the same definition.

If the motor cannot be disconnected from the load, set F1-37 (A2-37 in case of Motor 2) to 3 (Asynchronous motor complete static auto-tuning) and press RUN on the operating panel. Auto-tuning starts.

6 Troubleshooting and Solutions

6.1 Fault Codes and Solutions

Troubleshoot the faults occurred during operating the AC drive as follows.

Fault Code	Fault Name	Possible Cause	Solution
Err02	Overcurrent during acceleration	A grounding fault or short circuit exists in the output circuit.	Check whether short-circuit occurs on the motor, motor cable, or contactor.
		The control mode is SVC or FVC but motor auto-tuning is not performed.	Set motor parameters according to the motor nameplate and perform motor auto-tuning.
		The acceleration time is too short.	Increase the acceleration time.
		The overcurrent stall prevention parameters are set improperly.	Ensure that current limit is enabled (F3-19 = 1). The setting of F3-18 (Current limit level) is too large. Adjust it between 120% and 150%. The setting of F3-20 (Current limit gain) is too small. Adjust it between 20 and 40.
		Customized torque boost or V/F curve is not appropriate.	Adjust the customized torque boost or V/F curve.
		The motor is started while spinning.	Enable the flying start function or start the motor after it stops spinning.
		The AC drive suffers external interference.	View historical fault records. If the current value is far from the overcurrent level, find the interference source. If an external interference does not exist, the driver board or Hall element may be faulty.

Fault Code	Fault Name	Possible Cause	Solution
Err03	Overcurrent during deceleration	A grounding fault or short circuit exists in the output circuit.	Check whether short-circuit occurs on the motor, motor cable, or contactor.
		The control mode is SVC or FVC but motor auto-tuning is not performed.	Set the motor parameters according to the motor nameplate and perform motor auto-tuning.
		The deceleration time is too short.	Increase the deceleration time.
		The overcurrent stall prevention parameters are set improperly.	Ensure that current limit is enabled (F3-19 = 1). The setting of F3-18 (Current limit level) is too large. Adjust it between 120% and 150%. The setting of F3-20 (Current limit gain) is too small. Adjust it between 20 and 40.
		The braking unit and braking resistor are not installed.	Install the braking unit and braking resistor.
		The AC drive suffers external interference.	View historical fault records. If the current value is far from the overcurrent level, find the interference source. If an external interference does not exist, the driver board or Hall element may be faulty.
Err04	Overcurrent at constant speed	A grounding fault or short circuit exists in the output circuit.	Check whether short-circuit occurs on the motor, motor cable, or contactor.
		The control mode is SVC or FVC but motor auto-tuning is not performed.	Set motor parameters according to the motor nameplate and perform motor auto-tuning.
		The overcurrent stall prevention parameters are set improperly.	Ensure that current limit is enabled (F3-19 = 1). The setting of F3-18 (Current limit level) is too large. Adjust it between 120% and 150%. The setting of F3-20 (Current limit gain) is too small. Adjust it between 20 and 40.
		The AC drive power class is small.	If the output current exceeds the rated motor current or rated output current of the AC drive during stable running, use an AC drive of larger power class.
		The AC drive suffers external interference.	View historical fault records. If the current value is far from the overcurrent level, find the interference source. If an external interference does not exist, the driver board or Hall element may be faulty.

Fault Code	Fault Name	Possible Cause	Solution
Err05	Overvoltage during acceleration	The input voltage is too high.	Adjust the input voltage to the normal range.
		An external force drives the motor during acceleration.	Cancel the external force or install a braking resistor.
		The overvoltage stall prevention parameters are set improperly.	Ensure that the voltage limit function is enabled (F3-23 = 1). The setting of F3-22 (Voltage limit) is too large. Adjust it between 700 V and 770 V. The setting of F3-24 (Frequency gain for voltage limit) is too small. Adjust it between 30 and 50.
		The braking unit and braking resistor are not installed.	Install the braking unit and braking resistor.
		The acceleration time is too short.	Increase the acceleration time.
Err06	Overvoltage during deceleration	The overvoltage stall prevention parameters are set improperly.	Ensure that the voltage limit function is enabled (F3-23 = 1). The setting of F3-22 (Voltage limit) is too large. Adjust it between 700 V and 770 V. The setting of F3-24 (Frequency gain for voltage limit) is too small. Adjust it between 30 and 50.
		An external force drives the motor during deceleration.	Cancel the external force or install a braking resistor.
		The deceleration time is too short.	Increase the deceleration time.
		The braking unit and braking resistor are not installed.	Install the braking unit and braking resistor.
Err07	Overvoltage at constant speed	The overvoltage stall prevention parameters are set improperly.	Ensure that the voltage limit function is enabled (F3-23 = 1). The setting of F3-22 (Voltage limit) is too large. Adjust it between 700 V and 770 V. The setting of F3-24 (Frequency gain for voltage limit) is too small. Adjust it between 30 and 50. The setting of F3-26 (Frequency rise threshold during voltage limit) is too small. Adjust it between 5 Hz and 20 Hz.
		An external force drives the motor during acceleration.	Cancel the external force or install a braking resistor.
Err08	Pre-charge power fault	The bus voltage fluctuates around the undervoltage threshold continuously.	Contact the agent or Inovance.

Fault Code	Fault Name	Possible Cause	Solution
Err09	Undervoltage	An instantaneous power failure occurs.	Enable the power dip ride through function (F9-59 ≠ 0).
		The AC drive's input voltage is not within the permissible range.	Adjust the voltage to the normal range.
		The bus voltage is abnormal.	Contact the agent or Inovance.
		The rectifier bridge, pre-charge resistor, driver board, or control board are abnormal.	Contact the agent or Inovance.
Err10	AC drive overload	The load is too heavy or locked-rotor occurs on the motor.	Reduce the load or check motor and mechanical conditions.
		The AC drive power class is small.	Replace an AC drive of larger power class.
Err11	Motor overload	F9-01 (Motor overload protection gain) is set improperly.	Set F9-01 (Motor overload protection gain) correctly.
		The load is too heavy or locked-rotor occurs on the motor.	Reduce the load or check motor and mechanical conditions.
Err12	Input phase loss	Input phase loss occurs.	Eliminate faults in external circuits.
		The driver board, lightning protection board, main control board, or rectifier bridge is abnormal.	Contact the agent or Inovance.
Err13	Output phase loss	The motor is faulty.	Check and ensure that the motor is free of open circuit.
		The cable connecting the AC drive and the motor is abnormal.	Eliminate external faults.
		The AC drive's three-phase outputs are unbalanced when the motor is running.	Check whether the motor three-phase winding is normal.
		The driver board or the IGBT is abnormal.	Contact the agent or Inovance.
Err14	IGBT overheat	The ambient temperature is too high.	Lower the ambient temperature.
		The ventilation is clogged.	Clean the ventilation.
		The fan is damaged.	Replace the cooling fan.
		The thermistor of IGBT is damaged.	Replace the thermistor.
		The IGBT is damaged.	Replace the IGBT.

Fault Code	Fault Name	Possible Cause	Solution
Err15	External fault	An external fault signal is input using the DI.	Eliminate external faults, and confirm that the mechanical condition allows restart (F8-18) and reset the operation.
		An external fault signal is input using virtual I/O.	Confirm that the virtual I/O parameters in group A1 are set correctly and reset the operation.
Err16	Communication fault	The host controller is in abnormal state.	Check the cable of the host controller.
		The communication cable is abnormal.	Check the communication cables.
		The serial port communication protocol (F0-28) of the extension communication card is set improperly.	Set F0-28 (Serial port communication protocol) for the extension communication card correctly.
		Communication parameters in group Fd are set improperly.	Set communication parameters in group Fd properly.
		If the fault still exists after all the preceding checkings are done, restore the default settings.	
Err17	Contactor fault	The driver board and power supply are abnormal.	Replace the driver board or power supply board.
		The contactor is abnormal.	Replace the contactor.
		The lightning protection board is abnormal.	Replace the lightning protection board.
Err18	Current detection fault	The Hall element is abnormal.	Replace the Hall element.
		The driver board is abnormal.	Replace the driver board.
Err19	Motor auto-tuning fault	Motor parameters are not set according to the nameplate.	Set motor parameters correctly according to the nameplate.
		Motor auto-tuning times out.	Check whether the AC drive and motor are connected correctly.
		The encoder is abnormal.	Check whether F1-27 (Encoder pulses per revolution) is set correctly. Check whether signal lines of the encoder are connected correctly and securely.
Err20	Encoder fault	The encoder is not matched.	Set the encoder type correctly.
		The encoder wiring is incorrect.	Check the PG card power supply and phase sequence.
		The encoder is damaged.	Replace the encoder.
		The PG card is abnormal.	Replace the PG card.
Err21	EEPROM read-write fault	The EEPROM chip is damaged.	Replace the main control board.
Err23	Short circuit to ground	The motor is short-circuited to the ground.	Replace the cable or motor.

Fault Code	Fault Name	Possible Cause	Solution
Err26	Accumulative running time reached	The accumulative running time reached the set value.	Clear the record by parameter initialization.
Err27	User-defined fault 1	The signal of user-defined fault 1 is input through the multi-functional terminal DI.	Perform the reset operation.
		The signal of user-defined fault 1 is input through the virtual I/O.	Perform the reset operation.
Err28	User-defined fault 2	The signal of user-defined fault 2 is input through the multi-functional terminal DI.	Perform the reset operation.
		The signal of user-defined fault 2 is input through the virtual I/O.	Perform the reset operation.
Err29	Accumulative power-on time reached	The accumulative power-on time reached the set value.	Clear the record by parameter initialization.
Err30	Load loss	The operation current of the AC drive is smaller than F9-64 (Load loss detection level).	Check whether the load is disconnected or ensure that F9-64 (Load loss detection level) and F9-65 (Load loss detection time) are set based on the actual conditions.
Err31	PID Feedback loss	PID feedback is smaller than FA-26 (Detection level of PID feedback loss).	Check the PID feedback signal or set FA-26 (Detection level of PID feedback loss) correctly.
Err40	Pulse-by-pulse current limit fault	The load is too heavy or locked-rotor occurs on the motor.	Reduce the load or check motor and mechanical conditions.
		The AC drive power class is small.	Replace an AC drive of larger power class.
Err41	Motor switchover fault during running	Motor switchover is performed using a terminal during running of the AC drive.	Perform motor switchover after the AC drive stops.
Err42	Speed error	Encoder parameters are set improperly.	Set encoder parameters properly.
		Motor auto-tuning is not performed.	Perform motor auto-tuning.
		F9-69 (Detection level of speed error) and F9-70 (Detection time of speed error) are set incorrectly.	Set F9-69 (Detection level of speed error) and F9-70 (Detection time of speed error) correctly based on actual condition.

Fault Code	Fault Name	Possible Cause	Solution
Err43	Motor overspeed	Encoder parameters are set improperly.	Set encoder parameters properly.
		Motor auto-tuning is not performed.	Perform motor auto-tuning.
		F9-67 (Overspeed detection level) and F9-68 (Overspeed detection time) are set incorrectly.	Set F9-67 (Overspeed detection level) and F9-68 (Overspeed detection time) correctly based on the actual situation.
Err45	Motor overheat	Cable connection of the temperature sensor becomes loose.	Check cable connection of the temperature sensor.
		The motor temperature is too high.	Increase the carrier frequency or take other measures to cool the motor.
Err61	Braking unit overload	The resistance of braking resistor is too small.	Use a braking resistor of larger resistance.
Err62	Short-circuit of braking circuit	The braking module is abnormal.	Contact the agent or Inovance.

6.2 Common Symptoms and Solutions

No.	Fault Symptom	Possible Cause	Solution
1	There is no display upon power-on.	There is no power supply to the AC drive or the power input to the AC drive is too low.	Check the power supply.
		The switching power supply on the driver board of the AC drive is faulty.	Check the bus voltage.
		Wires between the control board and driver board and between the control board and operating panel break.	Re-connect the 8-pin wire and 40-pin wire.
		The pre-charge resistor of the AC drive is damaged.	Contact the agent or Inovance.
		The control board or the operating panel is faulty.	
		The rectifier bridge is damaged.	

No.	Fault Symptom	Possible Cause	Solution
2	"**HC**" is displayed upon power-on.	Cable connection between the driver board and control board is in poor contact.	Re-connect the 8-pin wire and 28-pin wire.
		Related components on the control board are damaged.	Contact the agent or Inovance.
		The motor or motor cable is short-circuited to ground.	
		The Hall element is faulty.	
		The mains voltage is too low.	
3	"**Err23**" is displayed upon power-on.	The motor or the motor cable is short-circuited to the ground.	Check the insulation status of the motor and the output cable with a megger.
		The AC drive is damaged.	Contact the agent or Inovance.
4	The AC drive display is normal upon power-on, but after running the AC drive displays "**HC**" and stops immediately.	The cooling fan is damaged or does not rotate.	Replace the damaged fan.
		The cable of the external control terminal is short-circuited.	Eliminate the external short-circuit fault.
5	"**Err14**" (IGBT overheat) is detected frequently.	The setting of carrier frequency is too high.	Reduce F0-15 (Carrier frequency).
		The cooling fan is damaged, or the ventilation is clogged.	Replace the cooling fan and clean the ventilation.
		Components (thermal coupler or others) inside the AC drive are damaged.	Contact the agent or Inovance.
6	The motor does not rotate after the AC drive runs.	Check the motor and the motor cables.	Check that cabling between the AC drive and the motor is normal.
		The motor parameters in group F1 are set improperly.	Restore the factory parameters and reset the following parameters properly: ◆ Encoder parameters ◆ Motor ratings, such as rated motor frequency and rated motor speed ◆ F0-01 (Motor 1 control mode) and F0-02 (Running command selection) ◆ F3-01 (Torque boost) in V/F control under heavy-load start
		Cable connection between the driver board and control board is in poor contact.	Re-connect wirings and ensure secure connection.
		The driver board is faulty.	Contact the agent or Inovance.

No.	Fault Symptom	Possible Cause	Solution
7	DI terminals are disabled.	The related parameters are set incorrectly.	Check and reset the parameters in group F4 again.
		The external signal is incorrect.	Re-connect the external signal cable.
		The jumper across OP and +24 V becomes loose.	Re-confirm the jumper bar across OP and +24 V.
		The control board is faulty.	Contact the agent or Inovance.
8	The motor speed does not rise in FVC control.	The encoder is faulty.	Replace the encoder and re-confirm cable connection.
		The encoder connection is incorrect or in poor contact.	Replace the PG card.
		The PG card is faulty.	Contact the agent or Inovance.
		The driver board is faulty.	
9	The AC drive detects overcurrent and overvoltage frequently.	The motor parameters in group F1 are set improperly.	Set the motor parameters in group F1 or perform motor auto-tuning again.
		The acceleration/deceleration time is improper.	Set proper acceleration/deceleration time.
		The load fluctuates.	Contact the agent or Inovance.
10	"**Err17**" is detected upon power-on or running.	The pre-charge contactor is not closed.	◆ Check whether the contactor cable is loose. ◆ Check whether the contactor is faulty. ◆ Check whether 24 V power supply of the contactor is faulty. ◆ Contact the agent or Inovance.
11	The brake torque of the motor is insufficient when the motor is in the deceleration or decelerate to stop state.	The encoder disconnection or overvoltage stall protection takes effect.	Check the encoder wiring at FVC (F0-01 = 1). If the braking resistor has been configured, set F3-23 (Voltage limit selection) to 0 (Disabled).

7 Maintenance

7.1 Routine Maintenance

Check the following items daily to ensure normal running and prevent damage to the AC drive. Copy this checklist and sign the "Checked" column after each inspection.

Inspection Item	Inspection Points	Solutions	Checked
Motor	Inspect whether the abnormal sounds and vibration occur on the motor.	◆ Check whether the mechanical connection is normal. ◆ Check whether output phase loss occurs on the motor. ◆ Check whether retaining screws of the motor are tightened.	
Fan	Inspect whether the cooling fan of the AC drive and motor work abnormally.	◆ Check running of the cooling fan of the AC drive. ◆ Check whether the cooling fan of the motor is normal. ◆ Check whether the ventilation is clogged. ◆ Check whether the ambient temperature is within the permissible range.	
Installation environment	Inspect whether the cabinet and cable duct are abnormal.	◆ Check input and output cables for damaged insulation. ◆ Check for vibration of hanging bracket. ◆ Check whether ground bars and terminals become loose or get corroded.	
Load	Inspect whether the running current of the AC drive exceeds the rated current of the AC drive and motor for a certain period.	◆ Check whether motor parameters are set properly. ◆ Check whether the motor is overloaded. ◆ Check whether the mechanical vibration is severe (allowed range: < 1 g).	
Input voltage	Inspect whether the power voltage of the main and control circuits is within the allowed range.	◆ Check that the input voltage is within the allowed range. ◆ Check whether start of heavy load exists.	

7.2 Periodic Inspection

Inspection Item	Inspection Point	Solution	Checked
General	Inspect for wastes, dirt, and dust on the surface of the AC drive.	◆ Check whether the cabinet of the AC drive is powered off. ◆ Use a vacuum cleaner to suck up wastes and dust to prevent direct touching. ◆ Wipe stubborn stains with alcohol and wait until the alcohol evaporates.	
Cables	Inspect power cables and connections for discoloration. Inspect wiring insulation for aging or wear.	◆ Replace cracked cables. ◆ Replace damaged terminals.	
Peripheral devices such as relay and contactor	Check whether the contactor is loose or abnormal noise exists during operation. Check whether short-circuit, water stain, expansion, or cracking occurs on peripheral devices.	◆ Replace abnormal peripheral devices.	
Ventilation	Inspect whether ventilation and heatsink are clogged. Check whether the fan is damaged.	◆ Clean the ventilation. ◆ Replace the fan.	
Control circuit	Inspect for control components in poor contact. Inspect for loose terminal screws. Inspect for control cables with cracked insulation.	◆ Clear away foreign matters on the surface of control cables and terminals. ◆ Replace damaged or corroded control cables.	

7.3 Replacement of Wear Parts

7.3.1 Service Life of Wear Parts

The service life of fans and electrolytic DC bus capacitors is related to the operating environment and maintenance status. The general service life is listed as follows.

Component	Service Life [1]
Fan	⩾ 5 years
Electrolytic capacitor	⩾ 5 years

[1] You can determine when to replace these parts according to the actual operating time.

- Ambient temperature: 40°C
- Load rate: 80%
- Operating rate: 24 hours per day

7.3.2 Replacing Cooling Fans

1) Possible damage causes: bearing worn and blade aging

2) Judging criteria: whether there is crack on the blade; whether there is abnormal vibration noise upon startup; whether the blade runs abnormally

3) Replacement notes:

- To remove the cooling fan, decompress the fan cover hook and pull the cover out.
- After replacing the fan, check that the air flow direction is upright.

Removing the Fan [MD500T45G(B) to MD500T160G and MD500-2T22G(B) to MD500-2T55G]		
① Disconnect the fan power cable connector from the AC drive. (Top view)	② Remove the four screws from the fan cover using a screwdriver.	③ Remove the fan and fan cover from the AC drive.

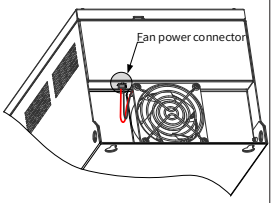

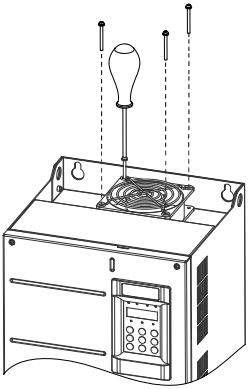

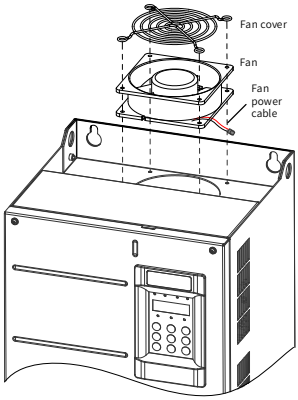

Installing the Fan [MD500T45G(B) to MD500T160G and MD500-2T22G(B) to MD500-2T55G]

① Install the fan in a reverse procedure to removal. Pay attention to the direction of the fan.
② Install the fan and fan cover on the AC drive. Note that the mounting holes are aligned, as shown in figure 3 of the removal procedure.
③ After the replacement is completed, check that the air flow direction is upright.

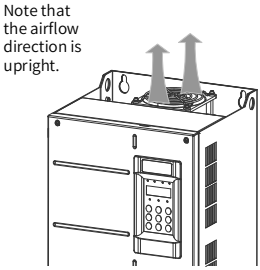

Removing the Fan (MD500T200G to MD500T450G)		
① Remove the six screws on the cover. Then, hold the cover with both hands and lift it up in the arrow direction shown below to remove the cover.	② Disconnect the fan power cable connectors from the AC drive. Each fan has a power cable connector. ③ Remove screws from the fan box and draw the fan box out in the arrow direction.	④ Loosen screws from each fan cover and remove the fan.
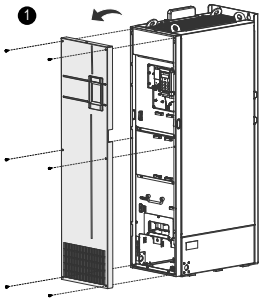	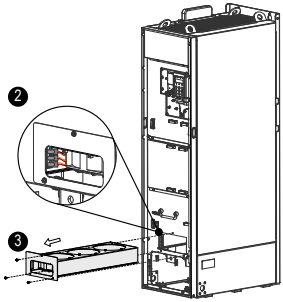	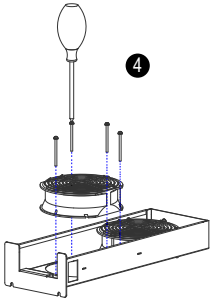
Installing the Fan (MD500T200G to MD500T450G)		
① Install the fan in a reverse procedure to removal. Pay attention to the direction of the fan. ② Align the fan box to the rail and push it into the AC drive. ③ Connect the fan power cable connectors before fixing the fan box. After the replacement is completed, check that the air flow direction is upright. 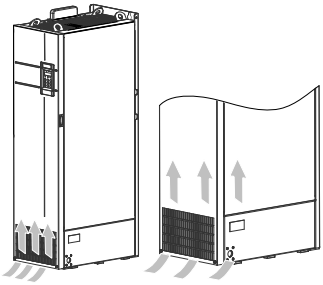		

7.4 Storage

For storage of the AC drive, pay attention to the following three aspects:

1) Pack the AC drive with the original packing box provided by Inovance.

2) Do not expose the AC drive to moisture, high temperature or outdoor direct sunlight for a long time.

3) The electrolytic capacitor will deteriorate after being stored for a long time. Therefore, the AC drive must be switched on once every 6 months, each time lasting at least 5 hours. Ensure to increase the input voltage gradually to the rated value by using a voltage regulator. Contact professionals for technical support if necessary.

Appendix A Parameter Table

☆ : It is possible to modify the parameter with the AC drive in the Stop and in the Run status.

★ : It is not possible to modify the parameter with the AC drive in the Run status.

● : The parameter is the actual measured value and cannot be modified.

*: The parameter is a factory parameter and can be set only by the manufacturer.

A.1 Standard Parameter Table

No.	Param. Name	Setting Range		Default	Change
Group F0: Standard Parameters					
F0-00	G/P type display	1: G (constant torque load)	2: P (fan and pump)	Model dependent	●
F0-01	Motor 1 control mode	0: SVC 1: FVC	2: V/F	0	★
F0-02	Running command selection	0: Operating panel 1: Terminal	2: Serial communication	0	☆
F0-03	Main frequency reference setting channel selection	0: Digital setting (revised value is cleared after power off) 1: Digital setting (revised value is not cleared after power off) 2: AI1 3: AI2	4: AI3 5: Pulse setting (DI5) 6: Multi-reference 7: Simple PLC 8: PID reference 9: Communication setting	0	★
F0-04	Auxiliary frequency reference setting channel selection	Same as F0-03 (Main frequency reference setting channel selection)		0	★
F0-05	Base value of range of auxiliary frequency reference for main and auxiliary calculation	0: Relative to maximum frequency	1: Relative to main frequency reference	0	☆
F0-06	Range of auxiliary frequency reference for main and auxiliary calculation	0% to 150%		100%	☆
F0-07	Final Frequency reference setting selection	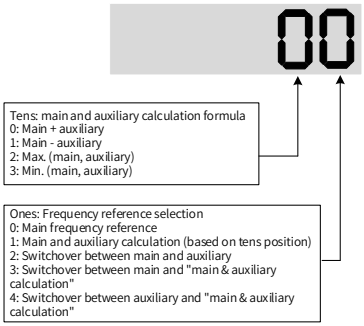		00	☆
F0-08	Preset frequency	0.00 Hz to F0-10 (Max. frequency)		50.00 Hz	☆
F0-09	Running direction	0: Run in the default direction	1: Run in the direction reverse to the default direction	0	☆
F0-10	Max. frequency	50.00 Hz to 500.00 Hz		50.00 Hz	★

No.	Param. Name	Setting Range		Default	Change
F0-11	Setting channel of frequency upper limit	0: Set by F0-12 (Frequency reference upper limit) 1: AI1 2: AI2	3: AI3 4: Pulse reference 5: Communication reference	0	★
F0-12	Frequency reference upper limit	F0-14 (Frequency reference lower limit) to F0-10 (Max. frequency)		50.00 Hz	☆
F0-13	Frequency reference upper limit offset	0.00 Hz to F0-10 (Max. frequency)		0.00 Hz	☆
F0-14	Frequency reference lower limit	0.00 Hz to F0-12 (Frequency reference upper limit)		0.00 Hz	☆
F0-15	Carrier frequency	0.5 kHz to 16.0 kHz		Model dependent	☆
F0-16	Carrier frequency adjusted with load	0: Disabled	1: Enabled	1	☆
F0-17	Acceleration time 1	0.00s to 650.00s(F0-19 = 2) 0.0s to 6500.0s(F0-19 = 1)	0s to 65000s(F0-19 = 0)	Model dependent	☆
F0-18	Deceleration time 1	0.00s to 650.00s(F0-19 = 2) 0.0s to 6500.0s(F0-19 = 1)	0s to 65000s(F0-19 = 0)	Model dependent	☆
F0-19	Acceleration/Deceleration time unit	0: 1s 1: 0.1s	2: 0.01s	1	★
F0-21	Frequency offset of auxiliary frequency setting channel for main and auxiliary calculation	0.00 Hz to F0-10 (Max. frequency)		0.00 Hz	☆
F0-22	Frequency reference resolution	2: 0.01 Hz		2	★
F0-23	Retentive of digital setting frequency upon stop	0: Not retentive	1: Retentive	0	☆
F0-24	Motor parameter group selection	0: Motor parameter group 1	1: Motor parameter group 2	0	★
F0-25	Acceleration/Deceleration time base frequency	0: Maximum frequency (F0-10) 1: Frequency reference	2: 100 Hz	0	★
F0-26	Base frequency for UP/DOWN modification during running	0: Running frequency	1: Frequency reference	0	★
F0-27	Running command + frequency source	000 Hundreds: serial communication + frequency reference setting channel Tens: terminal I/O control + frequency reference setting channel Ones: operating panel (keypad & display) + frequency reference setting channel 0: No function 1: Digital setting 2: AI1 3: AI2 4: AI3 5: Pulse reference (DI5) 6: Multi-reference 7: Simple PLC 8: PID reference 9: Serial communication		0000	☆
F0-28	Serial port communication protocol	0: Modbus protocol 1: PROFIBUS-DP or CANopen protocol		0	★
Group F1: Motor 1 Parameters					
F1-00	Motor type selection	0: Common asynchronous motor	1: Variable frequency asynchronous motor	0	★
F1-01	Rated motor power	0.1 kW to 1000.0 kW		Model dependent	★
F1-02	Rated motor voltage	1 V to 2000 V		Model dependent	★

No.	Param. Name	Setting Range		Default	Change
F1-03	Rated motor current	0.01 A to 655.35 A (AC drive power ≤ 55 kW) 0.1 A to 6553.5 A (AC drive power > 55 kW)		Model dependent	★
F1-04	Rated motor frequency	0.01 Hz to max. frequency		Model dependent	★
F1-05	Rated motor speed	1 rpm to 65535 rpm		Model dependent	★
F1-06	Stator resistance	0.001 Ω to 65.535 Ω (AC drive power ≤ 55 kW) 0.0001 Ω to 6.5535 Ω (AC drive power > 55 kW)		Auto-tuning parameter	★
F1-07	Rotor resistance	0.001 Ω to 65.535 Ω (AC drive power ≤ 55 kW) 0.0001 Ω to 6.5535 Ω (AC drive power > 55 kW)		Auto-tuning parameter	★
F1-08	Leakage inductive reactance	0.01 mH to 655.35 mH (AC drive power ≤ 55 kW) 0.001 mH to 65.535 mH (AC drive power > 55 kW)		Auto-tuning parameter	★
F1-09	Mutual inductive reactance	0.1 mH to 6553.5 mH (AC drive power ≤ 55 kW) 0.01 mH to 655.35 mH (AC drive power > 55 kW)		Auto-tuning parameter	★
F1-10	No-load current	0.01 A to F1-03 (AC drive power ≤ 55 kW) 0.1 A to F1-03 (AC drive power > 55 kW)		Auto-tuning parameter	★
F1-27	Encoder pulses per revolution	1 to 65535		1024	★
F1-28	Encoder type	0: ABZ incremental encoder	2: Resolver	0	★
F1-30	A/B phase sequence of ABZ incremental encoder	0: Forward	1: Reverse	0	★
F1-34	Number of pole pairs of resolver	1 to 65535		1	★
F1-36	Encoder wire-break fault detection time	0.0s: No detection	0.1s to 10.0s	0.0s	★
F1-37	Auto-tuning selection	0: No auto-tuning 1: Asynchronous motor partial static auto-tuning	2: Asynchronous motor dynamic auto-tuning 3: Asynchronous motor complete static auto-tuning	0	★
Group F2: Vector Control Parameters of Motor 1					
F2-00	Speed loop proportional gain 1	1 to 100		30	☆
F2-01	Speed loop integral time 1	0.01s to 10.00s		0.50s	☆
F2-02	Switchover frequency 1	0.00 to F2-05		5.00 Hz	☆
F2-03	Speed loop proportional gain 2	1 to 100		20	☆
F2-04	Speed loop integral time 2	0.01s to 10.00s		1.00s	☆
F2-05	Switchover frequency 2	F2-02 (Switchover frequency 1) to maximum frequency		10.00 Hz	☆
F2-06	Vector control slip compensation gain	50% to 200%		100%	☆
F2-07	Speed feedback filter time in SVC	0.000s to 0.100s		0.015s	☆
F2-09	Torque limit source in speed control	0: F2-10 1: AI1 2: AI2 3: AI3 4: Pulse reference (DI5)	5: Communication reference 6: Min. (AI1, AI2) 7: Max. (AI1, AI2) The full scale of 1-7 corresponds to F2-10.	0	☆
F2-10	Digital setting of torque limit in speed control	0.0% to 200.0%		150.0%	☆
F2-11	Torque limit source in speed control (regenerative)	0: F2-10 (electrical or regenerative) 1: AI 2: AI2 3: AI3 4: Pulse reference	5: Communication reference 6: Min. (AI1, AI2) 7: Max. (AI1, AI2) 8: F2-12 The full scale of 1-7 corresponds to F2-12.	0	☆
F2-12	Digital setting of torque limit in speed control (regenerative)	0.0% to 200.0%		150.0%	☆

No.	Param. Name	Setting Range		Default	Change
F2-13	Excitation adjustment proportional gain	0 to 60000		2000	☆
F2-14	Excitation adjustment integral gain	0 to 60000		1300	☆
F2-15	Torque adjustment proportional gain	0 to 60000		2000	☆
F2-16	Torque adjustment integral gain	0 to 60000		1300	☆
F2-17	Speed loop integral separation selection	0: Disabled	1: Enabled	0	☆
F2-21	Max. torque coefficient of field weakening area	50to200%		100%	☆
F2-22	Regenerative power limit selection	0: Disabled	1: Enabled	0	☆
F2-23	Regenerative power limit	0.0 to 200.0%		Model dependent	☆
Group F3: V/F Control Parameters					
F3-00	V/F curve setting	0, 2-9: Linear V/F 1: Multi-point V/F 10: V/F complete separation	11: V/F half separation Note: When F3-00 is set to 2 to 9, the actual linear V/F is used.	0	★
F3-01	Torque boost	0.0%: Automatic torque boost	0.1% to 30.0%	Model dependent	☆
F3-02	Cut-off frequency of torque boost	0.00 Hz to the maximum frequency		50.00 Hz	★
F3-03	Multi-point V/F frequency 1	0.00 Hz to F3-05 (Multi-point V/F frequency 2)		0.00 Hz	★
F3-04	Multi-point V/F voltage 1	0.0% to 100.0%		0.0%	★
F3-05	Multi-point V/F frequency 2	F3-03 (Multi-point V/F frequency 1) to F3-07 (Multi-point V/F frequency 3)		0.00 Hz	★
F3-06	Multi-point V/F voltage 2	0.0% to 100.0%		0.0%	★
F3-07	Multi-point V/F frequency 3	F3-05 (Multi-point V/F frequency 2) to F1-04 (rated motor frequency)		0.00 Hz	★
F3-08	Multi-point V/F voltage 3	0.0% to 100.0%		0.0%	★
F3-10	V/F over-excitation gain	0 to 200		64	☆
F3-11	V/F oscillation suppression gain	0 to 100		40	☆
F3-13	Voltage source for V/F separation	0: Set by F3-14 1: AI1 2: AI2 3: AI3 4: Pulse reference (DI5) 5: Multi-reference	6: Simple PLC 7: PID reference 8: Communication reference Note: 100.0% corresponds to the rated motor voltage	0	☆
F3-14	Digital setting of voltage for V/F separation	0 V to rated motor voltage		0 V	☆
F3-15	Voltage rise time of V/F separation	0.0s to 1000.0s Note: It is the time used for the voltage increases from 0 V to the rated motor voltage.		0.0s	☆
F3-16	Voltage decline time of V/F separation	0.0s to 1000.0s Note: It is the time used for the voltage increases from 0 V to the rated motor voltage.		0.0s	☆
F3-17	Stop mode selection for V/F separation	0: Frequency and voltage declining to 0 independently	1: Frequency declining after voltage declines to 0	0	☆
F3-18	Current limit level	50% to 200%		150%	★

No.	Param. Name	Setting Range		Default	Change
F3-19	Current limit selection	0: Disabled	1: Enabled	1 (Enabled)	★
F3-20	Current limit gain	0 to 100		20	☆
F3-21	Compensation factor of speed multiplying current limit	50% to 200%		50%	★
F3-22	Voltage limit	Three phase 380 to 480 V models: 330.0 to 800.0 V Three phase 200 to 240 V models: 330.0 to 800.0 V		770.0 V	★
F3-23	Voltage limit selection	0: Disabled	1: Enabled	1 (Enabled)	★
F3-24	Frequency gain for voltage limit	0 to 100		30	☆
F3-25	Voltage gain for voltage limit	0 to 100		30	☆
F3-26	Frequency rise threshold during voltage limit	0 to 50 Hz		5 Hz	★
Group F4: Input Terminals					
F4-00	DI1 function selection	0: No function 1: Forward RUN (FWD) or running command 2: Reverse RUN (REV) or running direction (Note: F4-11 must be set when F4-00 is set to 1 or 2.) 3: Three-wire control 4: Forward JOG (FJOG) 5: Reverse JOG (RJOG) 6: Terminal UP 7: Terminal DOWN 8: Coast to stop 9: Fault reset (RESET) 10: RUN pause 11: External fault normally open (NO) input 12: Multi-reference terminal 1 13: Multi-reference terminal 2 14: Multi-reference terminal 3 15: Multi-reference terminal 4 16: Terminal 1 for acceleration/deceleration time selection 17: Terminal 2 for acceleration/deceleration time selection 18: Frequency source switchover 19: UP and DOWN setting clear (terminal, operating panel) 20: Running command switchover terminal 1 21: Acceleration/Deceleration prohibited 22: PID pause 23: PLC status reset 24: Wobble pause 25: Counter input 26: Counter reset 27: Length count input 28: Length reset 29: Torque control prohibited	30: Pulse input (enabled only for DI5) 31: Reserved 32: Immediate DC injection braking 33: External fault normally closed (NC) input 34: Frequency modification enabled 35: PID action direction reverse 36: External STOP terminal 1 37: Running command switchover terminal 2 38: PID integral disabled 39: Switchover between main frequency source and preset frequency 40: Switchover between auxiliary frequency source and preset frequency 41: Motor terminal selection 42: Reserved 43: PID parameter switchover 44: User-defined fault 1 45: User-defined fault 2 46: Speed control/Torque control switchover 47: Emergency stop 48: External STOP terminal 2 49: Deceleration DC injection braking 50: Clear the current running time 51: Two-wire/Three-wire mode switchover 52: Reverse frequency forbidden 53-59: Reserved	1	★
F4-01	DI2 function selection			4	★
F4-02	DI3 function selection			9	★
F4-03	DI4 function selection			12	★
F4-04	DI5 function selection			13	★
F4-05	DI6 function selection			0	★
F4-06	DI7 function selection			0	★
F4-07	DI8 function selection			0	★
F4-08	DI9 function selection			0	★
F4-09	DI10 function selection			0	★
F4-10	DI filter time	0.000s to 1.000s		0.010s	☆
F4-11	Terminal I/O control mode	0: Two-wire control mode 1 1: Two-wire control mode 2	2: Three-wire control mode 1 3: Three-wire control mode 2	0	★
F4-12	Terminal UP/DOWN rate	0.001 Hz/s to 65.535 Hz/s		1.00 Hz/s	☆

No.	Param. Name	Setting Range	Default	Change
F4-13	AI curve 1 min. input	0.00 V to F4-15 (AI curve 1 max. input)	0.00 V	☆
F4-14	Corresponding percentage of AI curve 1 min. input	-100.0% to +100.0%	0.0%	☆
F4-15	AI curve 1 max. input	F4-13 (AI curve 1 min. input) to 10.00 V	10.00 V	☆
F4-16	Corresponding percentage of AI curve 1 max. input	-100.0% to +100.0%	100.0%	☆
F4-17	AI1 filter time	0.00s to 10.00s	0.10s	☆
F4-18	AI curve 2 min. input	0.00 V to F4-20 (AI curve 2 max. input)	0.00 V	☆
F4-19	Corresponding percentage of AI curve 2 min. input	-100.0% to +100.0%	0.0%	☆
F4-20	AI curve 2 max. input	F4-18 (AI curve 2 min. input) to 10.00 V	10.00 V	☆
F4-21	Corresponding percentage of AI curve 2 max. input	-100.0% to +100.0%	100.0%	☆
F4-22	AI2 filter time	0.00s to 10.00s	0.10s	☆
F4-23	AI3 curve min. input	-10.00 V to F4-25 (AI curve 3 max. input)	-10.00 V	☆
F4-24	Corresponding percentage of AI curve 3 min. input	-100.0% to +100.0%	-100.0%	☆
F4-25	AI curve 3 max. input	F4-23 (AI3 curve min. input) to 10.00 V	10.00 V	☆
F4-26	Corresponding percentage of AI curve 3 max. input	-100.0% to +100.0%	100.0%	☆
F4-27	AI3 filter time	0.00s to 10.00s	0.10s	☆
F4-28	Pulse min. input	0.00 kHz to F4-30 (Pulse max. input)	0.00 kHz	☆
F4-29	Corresponding percentage of pulse min. input	-100.0% to 100.0%	0.0%	☆
F4-30	Pulse max. input	F4-28 (Pulse min. input) to 100.00 kHz	50.00 kHz	☆
F4-31	Corresponding percentage of pulse max. input	-100.0% to 100.0%	100.0%	☆
F4-32	Pulse filter time	0.00s to 10.00s	0.10s	☆
F4-33	AI curve selection	000 Hundreds: AI3 curve selection, same as the ones position Tens: AI2 curve selection, same as the ones position Ones: AI1 curve selection 1: Curve 1 (2 points, see F4-13 t o F4-16) 2. Curve 2 (2 points, see F4-18 to F4-21) 3. Curve 3 (2 points, see F4-23 to F4-26) 4. Curve 4 (4 points, see A6-00 to A6-07) 5. Curve 5 (4 points, see A6-08 to A6-15)	321	☆
F4-34	Setting selection when AI less than min. input	000 Hundreds: AI3, same as the ones position Tens: AI2, same as the ones position Ones: AI1 0: Corresponding percentage of min. input 1: 0.0%	000	☆
F4-35	DI1 delay	0.0s to 3600.0s	0.0s	★

No.	Param. Name	Setting Range		Default	Change
F4-36	DI2 delay	0.0s to 3600.0s		0.0s	★
F4-37	DI3 delay	0.0s to 3600.0s		0.0s	★
F4-38	DI active mode selection 1	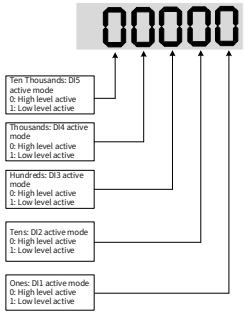		00000	★
F4-39	DI active mode selection 2	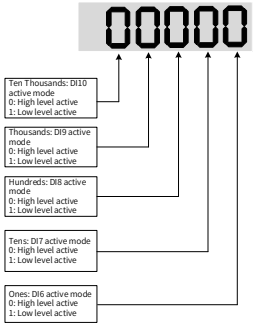		00000	★
Group F5: Output Terminals					
F5-00	FM terminal output mode	0: Pulse output (FMP)	1: Digital output (FMR)	0	☆
F5-01	FMR function selection (open collector output terminal)	0: No output 1: AC drive running 2: Fault output (coast to stop) 3: Frequency-level detection FDT1 output 4: Frequency reached 5: Zero-speed running (no output at stop) 6: Motor overload pre-warning 7: AC drive overload pre-warning 8: Set count value reached 9: Designated count value reached 10: Length reached 11: PLC cycle completed 12: Accumulative running time reached 13: Frequency limited 14: Torque limited 15: Ready for RUN 16: AI1 > AI2 17: Frequency upper limit reached 18: Frequency lower limit reached (no output at stop) 19: Undervoltage status output 20: Communication setting 21: Reserved 22: Reserved	23: Zero-speed running 2 (having output at stop) 24: Accumulative power-on time reached 25: Frequency level detection FDT2 output 26: Frequency 1 reached 27: Frequency 2 reached 28: Current 1 reached 29: Current 2 reached 30: Timing duration reached 31: AI1 input limit exceeded 32: Load lost 33: Reverse running 34: Zero current status 35: IGBT temperature reached 36: Software current limit exceeded 37: Frequency lower limit reached (having output at stop) 38: Alarm output 39: Motor overheat warning 40: Current running time reached 41: Fault output (no output at undervoltage)	0	☆
F5-02	Control board relay function selection (T/A-T/B-T/C)			2	☆
F5-03	Extension card relay (P/A-P/B-P/C) function selection			0	☆
F5-04	DO1 function selection			1	☆
F5-05	Extension card DO2 function selection			4	☆

No.	Param. Name	Setting Range		Default	Change
F5-06	FMP function selection	0: Running frequency 1: Set frequency 2: Output current 3: Output torque (absolute value, proportion to motor torque) 4: Output power 5: Output voltage 6: Pulse input (100.0% corresponds to 100.0 kHz) 7: AI1 8: AI2 9: AI3 (extension card)	10: Length 11: Count value 12: Communication setting 13: Motor rotational speed 14: Output current (100.0% corresponds to 1000.0 A) 15: Output voltage (100.0% corresponds to1000.0 V) 16: Output torque (actual value, proportion to motor torque)	0	☆
F5-07	AO1 function selection			0	☆
F5-08	AO2 function selection			1	☆
F5-09	Max. FMP output frequency	0.01 kHz to 100.00 kHz		50.00 kHz	☆
F5-10	AO1 zero offset coefficient	-100.0% to +100.0%		0.0%	☆
F5-11	AO1 gain	-10.00 to +10.00		1.00	☆
F5-12	AO2 zero offset coefficient	-100.0% to +100.0%		0.0%	☆
F5-13	AO2 gain	-10.00 to +10.00		1.00	☆
F5-17	FMR output delay	0.0s to 3600.0s		0.0s	☆
F5-18	Relay 1 output delay	0.0s to 3600.0s		0.0s	☆
F5-19	Relay 2 output delay	0.0s to 3600.0s		0.0s	☆
F5-20	DO1 output delay	0.0s to 3600.0s		0.0s	☆
F5-21	DO2 output delay	0.0s to 3600.0s		0.0s	☆
F5-22	Active mode selection of DO output terminals	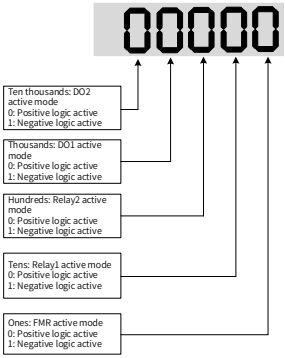		00000	☆
Group F6: Start/Stop Control					
F6-00	Start mode	0: Direct start 1: Catching a spinning motor	2: Pre-excited start (AC asynchronous drive) 3: SVC quick start	0	☆
F6-01	Flying start mode	0: From stop frequency 1: From power frequency	2: From max. frequency	0	★
F6-02	Flying start speed	1 to 100		20	☆
F6-03	Start frequency	0.00 Hz to 10.00 Hz		0.00 Hz	☆
F6-04	Start frequency holding time	0.0s to 100.0s		0.0s	★
F6-05	DC injection braking level/ Pre-excitation level	0% to 100%		50%	★
F6-06	DC injection braking active time/Pre-excitation active time	0.0s to 100.0s		0.0s	★
F6-07	Acceleration/Deceleration mode	0: Linear acceleration/deceleration	1-2: S-curve dynamic acceleration/deceleration	0	★
F6-08	Time proportion of S-curve start segment	0.0% to (100.0% - F6-09)		30.0%	★

No.	Param. Name	Setting Range		Default	Change
F6-09	Time proportion of S-curve end segment	0.0% to (100.0% - F6-08)		30.0%	★
F6-10	Stop mode	0: Decelerate to stop	1: Coast to stop	0	☆
F6-11	DC injection braking start frequency	0.00 Hz to the maximum frequency		0.00 Hz	☆
F6-12	DC injection braking delay time	0.0s to 100.0s		0.0s	☆
F6-13	DC injection braking level	0% to 100%		50%	☆
F6-14	DC injection braking active time	0.0s to 100.0s		0.0s	☆
F6-15	Braking use ratio	0% to 100%		100%	☆
F6-18	Catching a spinning motor current limit	30% to 200%		Model dependent	★
F6-21	Demagnetization time (effective for SVC)	0.00s to 5.00s		Model dependent	☆
F6-23	Overexcitation selection	0: Disabled 1: Enabled during deceleration	2: Enabled in the whole process	0	☆
F6-24	Overexcitation suppression current level	0 to 150%		100%	☆
F6-25	Overexcitation gain	1.00 to 2.50		1.25	☆
Group F7: Operating Panel and Display					
F7-00	LED default display check	0 to 1		0	☆
F7-01	MF.K key function selection	0: MF.K key disabled 1: Switchover from remote control (terminal or communication) to operating panel control	2: Switchover between forward rotation and reverse rotation 3: Forward jog 4: Reverse jog	0	★
F7-02	STOP/RESET key function	0: STOP/RESET key enabled only in operating panel control 1: STOP/RESET key enabled in any operation mode		1	☆
F7-03	LED display running parameters 1	0000 to FFFF 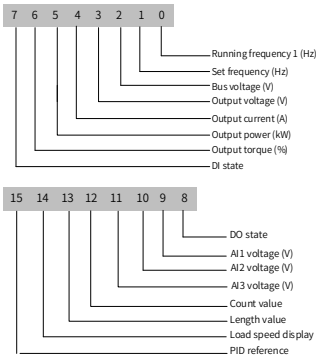		1F	☆

No.	Param. Name	Setting Range	Default	Change
F7-04	LED display running parameters 2	0000 to FFFF 7 6 5 4 3 2 1 0 PID feedback PLC stage Pulse reference (kHz) Running frequency 2 (Hz) Remaining running time AI1 voltage before correction (V) AI2 voltage before correction (V) AI3 voltage before correction (V) 15 14 13 12 11 10 9 8 Linear speed Current power-on time (h) Current running time (Min) Pulse reference (Hz) Communication reference Encoder feedback speed (Hz) Main frequency X display (Hz) Auxiliary frequency Y display (Hz)	0	☆
F7-05	Display stop parameters	0000 to FFFF 7 6 5 4 3 2 1 0 Frequency reference (Hz) Bus voltage (V) DI state DO state AI1 voltage (V) AI2 voltage (V) AI3 voltage (V) Count value 15 14 13 12 11 10 9 8 Length value PLC stage Load speed PID reference Pulse reference (kHz) Reserved Reserved Reserved	33	☆
F7-06	Load speed display coefficient	0.0001 to 6.5000	1.0000	☆
F7-07	Heatsink temperature of IGBT	-20°C to 120°C	-	●
F7-08	Product number	-	-	●
F7-09	Accumulative running time	0h to 65535h	-	●
F7-10	Performance software version	-	-	●
F7-11	Function software version	-	-	●
F7-12	Number of decimal places for load speed display	00 Tens: Number of decimal places for U0-19/U0-29 1: One decimal place 2: Two decimal places Ones: Number of decimal places for U0-14 0: No decimal place 1: One decimal place 2: Two decimal places 3: Three decimal places	21	☆
F7-13	Accumulative power-on time	0 to 65535h	-	●

No.	Param. Name	Setting Range		Default	Change
F7-14	Accumulative power consumption	0 to 65535 kWh		-	●
Group F8: Auxiliary Functions					
F8-00	Jog frequency reference	0.00 Hz to the maximum frequency		2.00 Hz	☆
F8-01	Jog acceleration time	0.0s to 6500.0s		20.0s	☆
F8-02	Jog deceleration time	0.0s to 6500.0s		20.0s	☆
F8-03	Acceleration time 2	0.0s to 6500.0s		Model dependent	☆
F8-04	Deceleration time 2	0.0s to 6500.0s		Model dependent	☆
F8-05	Acceleration time 3	0.0s to 6500.0s		Model dependent	☆
F8-06	Deceleration time 3	0.0s to 6500.0s		Model dependent	☆
F8-07	Acceleration time 4	0.0s to 6500.0s		0.0s	☆
F8-08	Deceleration time 4	0.0s to 6500.0s		0.0s	☆
F8-09	Frequency jump 1	0.00 Hz to the maximum frequency		0.00 Hz	☆
F8-10	Frequency jump 2	0.00 Hz to the maximum frequency		0.00 Hz	☆
F8-11	Frequency jump band	0.00 Hz to the maximum frequency		0.00 Hz	☆
F8-12	Forward/Reverse run switchover dead-zone time	0.0s to 3000.0s		0.0s	☆
F8-13	Reverse RUN selection	0: Disabled	1: Enabled	0	☆
F8-14	Running mode when frequency reference lower than frequency lower limit	0: Run at frequency reference lower limit	1: Stop 2: Run at zero speed	0	☆
F8-15	Droop rate	0.00% to 100.00%		0.00%	☆
F8-16	Accumulative power-on time threshold	0 to 65000h		0h	☆
F8-17	Accumulative running time threshold	0 to 65000h		0h	☆
F8-18	Startup protection selection	0: Disabled	1: Enabled	0	☆
F8-19	Frequency detection value 1	0.00 Hz to the maximum frequency		50.00 Hz	☆
F8-20	Frequency detection hysteresis 1	0.0% to 100.0% (FDT1 level)		5.0%	☆
F8-21	Detection width of target frequency reached	0.0% to 100.0% (maximum frequency)		0.0%	☆
F8-22	Jump frequency function	0: Disabled	1: Enabled	0	☆
F8-25	Switchover frequency of acceleration time 1 and acceleration time 2	0.00 Hz to the maximum frequency		0.00 Hz	☆
F8-26	Switchover frequency of deceleration time 1 and deceleration time 2	0.00 Hz to the maximum frequency		0.00 Hz	☆
F8-27	Set highest priority to terminal JOG function	0: Disabled	1: Enabled	0	☆
F8-28	Frequency detection value 2	0.00 Hz to the maximum frequency		50.00 Hz	☆
F8-29	Frequency detection hysteresis 2	0.0% to 100.0% (FDT2 level)		5.0%	☆
F8-30	Detection of frequency 1	0.00 Hz to the maximum frequency		50.00 Hz	☆
F8-31	Detection width of frequency 1	0.0% to 100.0% (maximum frequency)		0.0%	☆
F8-32	Detection of frequency 2	0.00 Hz to the maximum frequency		50.00 Hz	☆
F8-33	Detection width of frequency 2	0.0% to 100.0% (maximum frequency)		0.0%	☆

No.	Param. Name	Setting Range		Default	Change
F8-34	Zero current detection level	0.0% to 300.0% 100.0% corresponds to the rated motor current.		5.0%	☆
F8-35	Zero current detection delay	0.01s to 600.00s		0.10s	☆
F8-36	Output overcurrent threshold	0.0% (no detection)	0.1% to 300.0% (rated motor current)	200.0%	☆
F8-37	Output overcurrent detection delay	0.00s to 600.00s		0.00s	☆
F8-38	Detection level of current 1	0.0% to 300.0% (rated motor current)		100.0%	☆
F8-39	Detection width of current 1	0.0% to 300.0% (rated motor current)		0.0%	☆
F8-40	Detection level of current 2	0.0% to 300.0% (rated motor current)		100.0%	☆
F8-41	Detection width of current 2	0.0% to 300.0% (rated motor current)		0.0%	☆
F8-42	Timing function	0: Disabled	1: Enabled	0	★
F8-43	Running time setting channel	0: Set by F8-44 (Running time) 1: AI1 2: AI2	3: AI3 (100% of analog input corresponds to the value of F8-44)	0	★
F8-44	Running time	0.0 min to 6500.0 min		0.0 min	★
F8-45	AI1 input voltage lower limit	0.00 V to F8-46 (AI1 input voltage upper limit)		3.10 V	☆
F8-46	AI1 input voltage upper limit	0.00 V to F8-46 (AI1 input voltage upper limit)		6.80 V	☆
F8-47	IGBT temperature threshold	0°C to 100°C		75°C	☆
F8-48	Cooling fan working mode	0: Working during running	1: Working continuously	0	☆
F8-49	Wakeup frequency	F8-51 (Hibernating frequency) to F0-10 (Max. frequency)		0.00 Hz	☆
F8-50	Wakeup delay time	0.0s to 6500.0s		0.0s	☆
F8-51	Hibernating frequency	0.00 Hz to F8-49 (Wakeup frequency)		0.00 Hz	☆
F8-52	Hibernating delay time	0.0s to 6500.0s		0.0s	☆
F8-53	Running time threshold this time	0.0 to 6500.0 min		0.0 min	☆
F8-54	Output power correction coefficient	0.00% to 200.0%		100.0%	☆
Group F9: Fault and Protection					
F9-00	Motor overload protection	0: Disabled	1: Enabled	1	☆
F9-01	Motor overload protection gain	0.20 to 10.00		1.00	☆
F9-02	Motor overload pre-warning coefficient	50% to 100%		80%	☆
F9-03	Overvoltage protection gain	0 to 100		30	☆
F9-04	Overvoltage protection voltage	650 V to 800 V		770 V	☆
F9-07	Detection of short-circuit to ground	00 Tens: Detection of short-circuit to ground before running 0: Disabled 1: Enabled Ones: Detection of short-circuit to ground upon power on 0: Disabled 1: Enabled		01	☆
F9-08	Braking unit applied voltage	Three phase 380 to 480 V models: 330.0 to 800.0 V Three phase 200 to 240 V models: 330.0 to 800.0 V		760 V	★
F9-09	Auto reset times	0 to 20		0	☆

No.	Param. Name	Setting Range	Default	Change
F9-10	Selection of DO action during auto reset	0: Not act 1: Act	0	☆
F9-11	Delay of auto reset	0.1s to 100.0s	1.0s	☆
F9-12	Input phase loss/Contactor protection	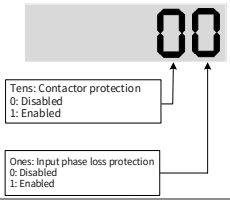	11	☆
F9-13	Output phase loss protection	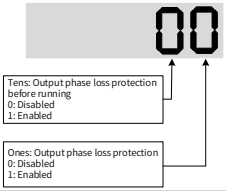	01	☆
F9-14	1st fault type	0: No fault 1: Reserved 2: Overcurrent during acceleration 3: Overcurrent during deceleration 4: Overcurrent at constant speed 5: Overvoltage during acceleration 6: Overvoltage during deceleration 7: Overvoltage at constant speed 8: Pre-charge power fault 9: Undervoltage 10: AC drive overload 11: Motor overload 12: Input phase loss 13: Output phase loss 14: IGBT overheat 15: External fault 16: Communication fault 17: Contactor fault 18: Current detection fault 19: Motor auto-tuning fault 20: Encoder/PG card fault 21: Parameter read and write fault 22: AC drive hardware fault 23: Motor short circuited to ground 24: Reserved 25: Reserved 26: Accumulative running time reached 27: User-defined fault 1 28: User-defined fault 2 29: Accumulative power-on time reached 30: Load lost 31: PID feedback lost during running 40: Fast current limit timeout 41: Motor switchover error during running 42: Too large speed deviation 43: Motor over-speed 45: Motor overheat 51: Initial position error 55: Slave error in master-slave control	—	●
F9-15	2nd fault type		—	●
F9-16	3rd (latest) fault type		—	●
F9-17	Frequency upon 3rd (latest) fault	0.00 Hz to 655.35 Hz	0.00 Hz	●
F9-18	Current upon 3rd (latest) fault	0.00 A to 655.35 A	0.00 A	●
F9-19	Bus voltage upon 3rd (latest) fault	0.0 V to 6553.5 V	0.0 V	●
F9-20	DI state upon 3rd (latest) fault	0 to 9999	0	●
F9-21	DO state upon 3rd (latest) fault	0 to 9999	0	●
F9-22	AC drive state upon 3rd (latest) fault	0 to 65535	0	●
F9-23	Power-on time upon 3rd (latest) fault	0s to 65535s	0s	●
F9-24	Running time upon 3rd (latest) fault	0.0s to 6553.5s	0.0s	●
F9-27	Frequency upon 2nd fault	0.00 Hz to 655.35 Hz	0.00 Hz	●
F9-28	Current upon 2nd fault	0.00 A to 655.35 A	0.00 A	●

No.	Param. Name	Setting Range	Default	Change
F9-29	Bus voltage upon 2nd fault	0.0 V to 6553.5 V	0.0 V	●
F9-30	DI state upon 2nd fault	0 to 9999	0	●
F9-31	DO state upon 2nd fault	0 to 9999	0	●
F9-32	AC drive state upon 2nd fault	0 to 65535	0	●
F9-33	Power-on time upon 2nd fault	0s to 65535s	0s	●
F9-34	Running time upon 2nd fault	0.0s to 6553.5s	0.0s	●
F9-37	Frequency upon 1st fault	0.00 Hz to 655.35 Hz	0.00 Hz	●
F9-38	Current upon 1st fault	0.00 A to 655.35 A	0.00 A	●
F9-39	Bus voltage upon 1st fault	0.0 V to 6553.5 V	0.0 V	●
F9-40	DI state upon 1st fault	0 to 9999	0	●
F9-41	DO state upon 1st fault	0 to 9999	0	●
F9-42	AC drive state upon 1st fault	0 to 65535	0	●
F9-43	Power-on time upon 1st fault	0s to 65535s	0s	●
F9-44	Running time upon 1st fault	0.0s to 6553.5s	0.0s	●
F9-47	Fault protection action selection 1	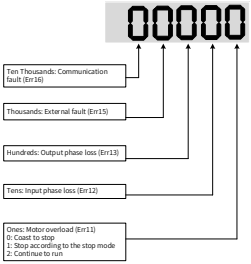	00000	☆
F9-48	Fault protection action selection 2	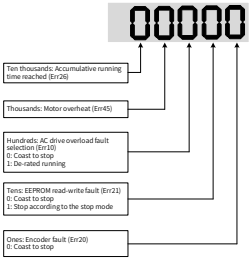	00000	☆

No.	Param. Name	Setting Range		Default	Change
F9-49	Fault protection action selection 3	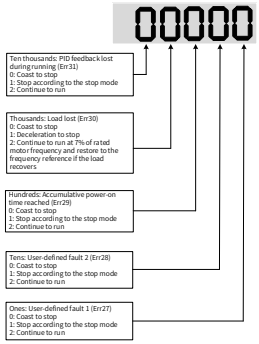		00000	☆
F9-50	Fault protection action selection 4	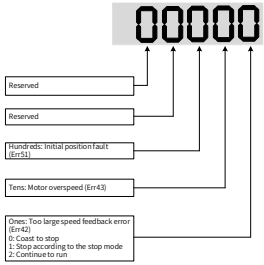		00000	☆
F9-54	Frequency selection for continuing to run upon fault	0: Current running frequency 1: Frequency reference 2: Frequency upper limit	3: Frequency lower limit 4: Backup frequency upon abnormality	0	☆
F9-55	Backup frequency upon fault	0.0% to 100.0% (100.0% corresponds to F0-10.)		100.0%	☆
F9-56	Type of motor temperature sensor	0: No temperature sensor	1: PT100 2: PT1000	0	☆
F9-57	Motor overheat protection threshold	0°C to 200°C		110°C	☆
F9-58	Motor overheat pre-warning threshold	0°C to 200°C		90°C	☆
F9-59	Power dip ride-through function selection	0: Disabled 1: Bus voltage constant control	2: Decelerate to stop	0	★
F9-60	Threshold of power dip ride-through function disabled	80% to 100%		85%	★
F9-61	Judging time of bus voltage recovering from power dip	0.0 to 100.0s		0.5S	★
F9-62	Threshold of power dip ride-through function enabled	60% to 100%		80%	★
F9-63	Load lost protection	0: Disabled	1: Enabled	0	☆
F9-64	Load lost detection level	0.0 to 100.0%		10.0%	☆
F9-65	Load lost detection time	0.0 to 60.0s		1.0s	☆
F9-67	Overspeed detection level	0.0% to 50.0% (maximum frequency)		20.0%	☆
F9-68	Overspeed detection time	0.0s: Not detected	0.1 to 60.0s	1.0s	☆
F9-69	Detection level of speed error	0.0% to 50.0% (maximum frequency)		20.0%	☆
F9-70	Detection time of speed error	0.0s: Not detected	0.1 to 60.0s	5.0s	☆

No.	Param. Name	Setting Range		Default	Change
F9-71	Power dip ride-through gain Kp	0 to 100		40	☆
F9-72	Power dip ride-through integral coefficient Ki	0 to 100		30	☆
F9-73	Deceleration time of power dip ride-through	0 to 300.0s		20.0s	★
Group FA: PID Function					
FA-00	PID reference setting channel	0: Set by FA-01 (PID digital setting) 1: AI1 2: AI2	3: AI3 4: Pulse reference (DI5) 5: Communication reference 6: Multi-reference	0	☆
FA-01	PID digital setting	0.0% to 100.0%		50.0%	☆
FA-02	PID feedback setting channel	0: AI1 1: AI2 2: AI3 3: AI1-AI2 4: Pulse reference (DI5)	5: Communication reference 6: AI1 + AI2 7: Max. (|AI1|, |AI2|) 8: Min. (|AI1|, |AI2|)	0	☆
FA-03	PID operation direction	0: Forward	1: Reverse	0	☆
FA-04	PID reference and feedback range	0 to 65535		1000	☆
FA-05	Proportional gain Kp1	0.0 to 1000.0		20.0	☆
FA-06	Integral time Ti1	0.01s to 10.00s		2.00s	☆
FA-07	Differential time Td1	0.000s to 10.000s		0.000s	☆
FA-08	PID output limit in reverse direction	0.00 Hz to the maximum frequency		0.00 Hz	★
FA-09	PID error limit	0.0% to 100.0%		0.0%	☆
FA-10	PID differential limit	0.00% to 100.00%		0.10%	☆
FA-11	PID reference change time	0.00 to 650.00s		0.00s	☆
FA-12	PID feedback filter time	0.00 to 60.00s		0.00s	☆
FA-13	PID output filter time	0.00 to 60.00s		0.00s	☆
FA-14	Reserved	-		-	☆
FA-15	Proportional gain Kp2	0.0 to 1000.0		20.0	☆
FA-16	Integral time Ti2	0.01s to 10.00s		2.00s	☆
FA-17	Differential time Td2	0.000s to 10.000s		0.000s	☆
FA-18	PID parameter switchover condition	0: No switchover 1: Switchover using DI 2: Auto switchover based on PID error	3: Auto switchover based on running frequency	0	☆
FA-19	PID error 1 for auto switchover	0.0% to FA-20 (PID error 2 for auto switchover)		20.0%	☆
FA-20	PID error 2 for auto switchover	FA-19 (PID error 1 for auto switchover) to 100.0%		80.0%	☆
FA-21	PID initial value	0.0% to 100.0%		0.0%	☆
FA-22	PID initial value active time	0.00 to 650.00s		0.00s	☆
FA-23	Reserved	-		-	-
FA-24	Reserved	-		-	-
FA-25	PID integral property	00 Tens: Whether to stop integral operation when the PID output reaches the limit 0: Continue integral operation 1: Stop integral operation Ones: Integral separation 0: Disabled 1: Enabled		00	☆
FA-26	Detection level of PID feedback loss	0.0%: No detection	0.1% to 100.0%	0.0%	☆

No.	Param. Name	Setting Range		Default	Change
FA-27	Detection time of PID feedback loss	0.0s to 20.0s		0.0s	☆
FA-28	Selection of PID operation at stop	0: Disabled	1: Enabled	0	☆
Group FB: Fixed Length and Count					
FB-05	Set length	0 m to 65535 m		1000 m	☆
FB-06	Actual length	0 m to 65535 m		0 m	☆
FB-07	Number of pulses per meter	0.1 to 6553.5		100.0	☆
FB-08	Set count value	1 to 65535		1000	☆
FB-09	Designated count value	1 to 65535		1000	☆
Group FC: Multi-Reference and Simple PLC Function					
FC-00	Reference 0	-100.0% to 100.0%		0.0%	☆
FC-01	Reference 1	-100.0% to 100.0%		0.0%	☆
FC-02	Reference 2	-100.0% to 100.0%		0.0%	☆
FC-03	Reference 3	-100.0% to 100.0%		0.0%	☆
FC-04	Reference 4	-100.0% to 100.0%		0.0%	☆
FC-05	Reference 5	-100.0% to 100.0%		0.0%	☆
FC-06	Reference 6	-100.0% to 100.0%		0.0%	☆
FC-07	Reference 7	-100.0% to 100.0%		0.0%	☆
FC-08	Reference 8	-100.0% to 100.0%		0.0%	☆
FC-09	Reference 9	-100.0% to 100.0%		0.0%	☆
FC-10	Reference 10	-100.0% to 100.0%		0.0%	☆
FC-11	Reference 11	-100.0% to 100.0%		0.0%	☆
FC-12	Reference 12	-100.0% to 100.0%		0.0%	☆
FC-13	Reference 13	-100.0% to 100.0%		0.0%	☆
FC-14	Reference 14	-100.0% to 100.0%		0.0%	☆
FC-15	Reference 15	-100.0% to 100.0%		0.0%	☆
FC-16	Simple PLC running mode	0: Stop after running one cycle 1: Keep final values after running one cycle	2: Repeat after running one cycle	0	☆
FC-17	Simple PLC retentive selection	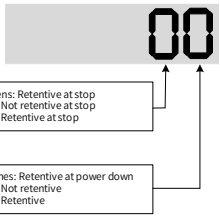		00	☆
FC-18	Running time of simple PLC reference 0	0.0s (h) to 6553.5s (h)		0.0s (h)	☆
FC-19	Acceleration/Deceleration time of simple PLC reference 0	0 to 3		0	☆
FC-20	Running time of simple PLC reference 1	0.0s (h) to 6553.5s (h)		0.0s (h)	☆
FC-21	Acceleration/Deceleration time of simple PLC reference 1	0 to 3		0	☆
FC-22	Running time of simple PLC reference 2	0.0s (h) to 6553.5s (h)		0.0s (h)	☆

No.	Param. Name	Setting Range	Default	Change
FC-23	Acceleration/Deceleration time of simple PLC reference 2	0 to 3	0	☆
FC-24	Running time of simple PLC reference 3	0.0s (h) to 6553.5s (h)	0.0s (h)	☆
FC-25	Acceleration/Deceleration time of simple PLC reference 3	0 to 3	0	☆
FC-26	Running time of simple PLC reference 4	0.0s (h) to 6553.5s (h)	0.0s (h)	☆
FC-27	Acceleration/Deceleration time of simple PLC reference 4	0 to 3	0	☆
FC-28	Running time of simple PLC reference 5	0.0s (h) to 6553.5s (h)	0.0s (h)	☆
FC-29	Acceleration/Deceleration time of simple PLC reference 5	0 to 3	0	☆
FC-30	Running time of simple PLC reference 6	0.0s (h) to 6553.5s (h)	0.0s (h)	☆
FC-31	Acceleration/Deceleration time of simple PLC reference 6	0 to 3	0	☆
FC-32	Running time of simple PLC reference 7	0.0s (h) to 6553.5s (h)	0.0s (h)	☆
FC-33	Acceleration/Deceleration time of simple PLC reference 7	0 to 3	0	☆
FC-34	Running time of simple PLC reference 8	0.0s (h) to 6553.5s (h)	0.0s (h)	☆
FC-35	Acceleration/Deceleration time of simple PLC reference 8	0 to 3	0	☆
FC-36	Running time of simple PLC reference 9	0.0s (h) to 6553.5s (h)	0.0s (h)	☆
FC-37	Acceleration/Deceleration time of simple PLC reference 9	0 to 3	0	☆
FC-38	Running time of simple PLC reference 10	0.0s (h) to 6553.5s (h)	0.0s (h)	☆
FC-39	Acceleration/Deceleration time of simple PLC reference 10	0 to 3	0	☆
FC-40	Running time of simple PLC reference 11	0.0s (h) to 6553.5s (h)	0.0s (h)	☆
FC-41	Acceleration/Deceleration time of simple PLC reference 11	0 to 3	0	☆
FC-42	Running time of simple PLC reference 12	0.0s (h) to 6553.5s (h)	0.0s (h)	☆
FC-43	Acceleration/Deceleration time of simple PLC reference 12	0 to 3	0	☆
FC-44	Running time of simple PLC reference 13	0.0s (h) to 6553.5s (h)	0.0s (h)	☆
FC-45	Acceleration/Deceleration time of simple PLC reference 13	0 to 3	0	☆

No.	Param. Name	Setting Range		Default	Change
FC-46	Running time of simple PLC reference 14	0.0s (h) to 6553.5s (h)		0.0s (h)	☆
FC-47	Acceleration/Deceleration time of simple PLC reference 14	0 to 3		0	☆
FC-48	Running time of simple PLC reference 15	0.0s (h) to 6553.5s (h)		0.0s (h)	☆
FC-49	Acceleration/Deceleration time of simple PLC reference 15	0 to 3		0	☆
FC-50	Time unit of simple PLC running	0: s	1: h	0	☆
FC-51	Reference 0 source	0: Set by FC-00 (Reference 0) 1: AI1 2: AI2 3: AI3 4: Pulse reference	5: PID 6: Set by preset frequency (F0-08), modified using terminal UP/DOWN	0	☆
Group FD: Communication					
FD-00	Baud rate	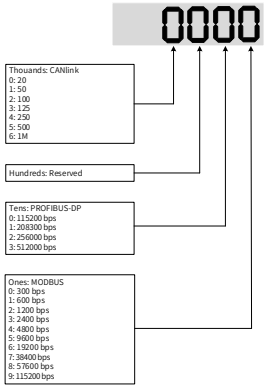		5005	☆
FD-01	Modbus data format symbol	0: No check (8,N,2) 1: Even parity check (8,E,1) 2: Odd parity check (8,O,1)	3: No check, data format (8,N,1) (Valid for Modbus)	0	☆
FD-02	Local address	0: Broadcast address; 1 to 247 (Valid for Modbus, PROFIBUS-DP, and CANlink)		1	☆
FD-03	Modbus response delay	0 to 20 ms (Valid for Modbus)		2	☆
FD-04	Serial port communication timeout	0.0: Disabled 0.1 to 60.0s (Valid for Modbus, PROFIBUS-DP, and CANopen)		0.0	☆
FD-05	Modbus protocol selection and PROFIBUS-DP data frame	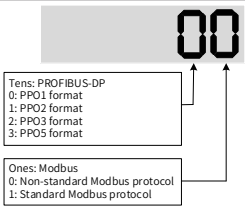		30	☆
FD-06	Current resolution read by communication	0: 0.01 A (valid when ≤ 55 kW)	1: 0.1 A	0	☆
FD-08	PROFIBUS and CANopen communication timeout time	0.0 (Invalid) 0.1 to 60.0s		0	☆

No.	Param. Name	Setting Range		Default	Change
Group FE: User-Defined Parameters					
FE-00	User-defined parameter 0	F0-00 to FP-xx A0-00 to Ax-xx U0-00 to U0-xx U3-00 to U3-xx		U3-17	☆
FE-01	User-defined parameter 1			U3-18	☆
FE-02	User-defined parameter 2			F0.00	☆
FE-03	User-defined parameter 3			F0.00	☆
FE-04	User-defined parameter 4			F0.00	☆
FE-05	User-defined parameter 5			F0.00	☆
FE-06	User-defined parameter 6			F0.00	☆
FE-07	User-defined parameter 7			F0.00	☆
FE-08	User-defined parameter 8			F0.00	☆
FE-09	User-defined parameter 9			F0.00	☆
FE-10	User-defined parameter 10			F0.00	☆
FE-11	User-defined parameter 11			F0.00	☆
FE-12	User-defined parameter 12			F0.00	☆
FE-13	User-defined parameter 13			F0.00	☆
FE-14	User-defined parameter 14			F0.00	☆
FE-15	User-defined parameter 15			F0.00	☆
FE-16	User-defined parameter 16			F0.00	☆
FE-17	User-defined parameter 17			F0.00	☆
FE-18	User-defined parameter 18			F0.00	☆
FE-19	User-defined parameter 19			F0.00	☆
FE-20	User-defined parameter 20			U0-68	☆
FE-21	User-defined parameter 21			U0-69	☆
FE-22	User-defined parameter 22			F0.00	☆
FE-23	User-defined parameter 23			F0.00	☆
FE-24	User-defined parameter 24			F0.00	☆
FE-25	User-defined parameter 25			F0.00	☆
FE-26	User-defined parameter 26			F0.00	☆
FE-27	User-defined parameter 27			F0.00	☆
FE-28	User-defined parameter 28			F0.00	☆
FE-29	User-defined parameter 29			F0.00	☆
Group FP: Parameter Management					
FP-00	User password	0 to 65535		0	☆
FP-01	Parameter initialization	0: No operation 01: Restore factory parameters except motor parameters 02: Clear records	04: Back up current user parameters 501: Restore user backup parameters	0	★
FP-02	Parameter display property	00 Tens: Group A 0: Not displayed 1: Displayed Ones: Group U 0: Not displayed 1: Displayed		11	★
FP-03	Selection of individualized parameter display	00 Tens: Selection of user-modified parameter display 0: Not displayed 1: Displayed Ones: Selection of user-defined parameter display 0: Not displayed 1: Displayed		00	☆
FP-04	Selection of parameter modification	0: Disabled	1: Enabled	0	☆

No.	Param. Name	Setting Range		Default	Change
Group A0: Torque Control and Limit					
A0-00	Speed/Torque control selection	0: Speed control	1: Torque control	0	★
A0-01	Torque reference source in torque control	0: Set by A0-03 (Torque digital setting in torque control) 1: AI1 2: AI2 3: AI3 4: Pulse reference	5: Communication reference 6: Min. (AI1, AI2) 7: Max. (AI1, AI2) The full scale of 1-7 corresponds to A0-03.	0	★
A0-03	Torque digital setting in torque control	-200.0% to 200.0%		150.0%	☆
A0-05	Forward max. frequency in torque control	0.00 Hz to the maximum frequency		50.00 Hz	☆
A0-06	Reverse max. frequency in torque control	0.00 Hz to the maximum frequency		50.00 Hz	☆
A0-07	Acceleration time in torque control	0.00s to 650.00s		0.00s	☆
A0-08	Deceleration time in torque control	0.00s to 650.00s		0.00s	☆
Group A1: Virtual DI/DO					
A1-00	VDI1 function selection	0 to 59		0	★
A1-01	VDI2 function selection	0 to 59		0	★
A1-02	VDI3 function selection	0 to 59		0	★
A1-03	VDI4 function selection	0 to 59		0	★
A1-04	VDI5 function selection	0 to 59		0	★
A1-05	VDI active state setting mode	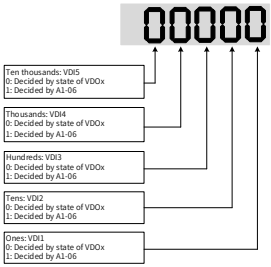		00000	★
A1-06	Selection of VDI active state	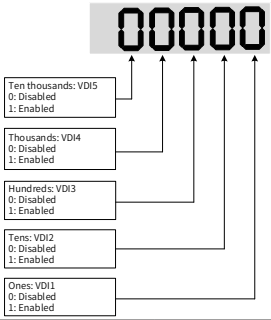		00000	★
A1-07	Function selection for AI1 used as DI	0 to 59		0	★
A1-08	Function selection for AI2 used as DI	0 to 59		0	★
A1-09	Function selection for AI3 used as DI	0 to 59		0	★

No.	Param. Name	Setting Range		Default	Change
A1-10	Active state selection for AI used as DI	000 Hundreds: AI3 0: High level active 1: Low level active Tens: AI2 0: High level active 1: Low level active Ones: AI1 0: High level active 1: Low level active		000	★
A1-11	VDO1 function selection	0: Short with physical DIx internally	1 to 41: See physical DO selection in group F5	0	☆
A1-12	VDO2 function selection	0: Short with physical DIx internally	1 to 41: See physical DO selection in group F5	0	☆
A1-13	VDO3 function selection	0: Short with physical DIx internally	1 to 41: See physical DO selection in group F5	0	☆
A1-14	VDO4 function selection	0: Short with physical DIx internally	1 to 41: See physical DO selection in group F5	0	☆
A1-15	VDO5 function selection	0: Short with physical DIx internally	1 to 41: See physical DO selection in group F5	0	☆
A1-16	VDO1 output delay	0.0s to 3600.0s		0.0s	☆
A1-17	VDO2 output delay	0.0s to 3600.0s		0.0s	☆
A1-18	VDO3 output delay	0.0s to 3600.0s		0.0s	☆
A1-19	VDO4 output delay	0.0s to 3600.0s		0.0s	☆
A1-20	VDO5 output delay	0.0s to 3600.0s		0.0s	☆
A1-21	VDO active mode selection	00000 Ten thousands: VDO5 0: Positive logic active 1: Negative logic active Thousands: VDO4 0: Positive logic active 1: Negative logic active Hundreds: VDO3 0: Positive logic active 1: Negative logic active Tens: VDO2 0: Positive logic active 1: Negative logic active Ones: VDO1 0: Positive logic active 1: Negative logic active		00000	☆
Group A2: Motor 2 Parameters					
A2-00	Motor type selection	0: Common asynchronous motor	1: Variable frequency asynchronous motor	0	★
A2-01	Rated motor power	0.1 kW to 1000.0 kW		Model dependent	★
A2-02	Rated motor voltage	1 V to 2000 V		Model dependent	★
A2-03	Rated motor current	0.01 A to 655.35 A (AC drive power ⩽ 55 kW) 0.1 A to 6553.5 A (AC drive power > 55 kW)		Model dependent	★
A2-04	Rated motor frequency	0.01 Hz to the maximum frequency		Model dependent	★
A2-05	Rated motor speed	1 rpm to 65535 rpm		Model dependent	★
A2-06	Stator resistance	0.001 Ω to 65.535 Ω (AC drive power ⩽ 55 kW) 0.0001 Ω to 6.5535 Ω (AC drive power > 55 kW)		Model dependent	★
A2-07	Rotor resistance	0.001 Ω to 65.535 Ω (AC drive power ⩽ 55 kW) 0.0001 Ω to 6.5535 Ω (AC drive power > 55 kW)		Model dependent	★
A2-08	Leakage inductive reactance	0.01 mH to 655.35 mH (AC drive power ⩽ 55 kW) 0.001 mH to 65.535 mH (AC drive power > 55 kW)		Model dependent	★

No.	Param. Name	Setting Range		Default	Change
A2-09	Mutual inductive reactance	0.1 mH to 6553.5 mH (AC drive power ≤ 55 kW) 0.01 mH to 655.35 mH (AC drive power > 55 kW)		Model dependent	★
A2-10	No-load current	0.01 A to A2-03 (AC drive power ≤ 55 kW) 0.1 A to A2-03 (AC drive power > 55 kW)		Model dependent	★
A2-27	Encoder pulses per revolution	1 to 65535		1024	★
A2-28	Encoder type	0: ABZ incremental encoder	2: Resolver	0	★
A2-29	Speed feedback channel selection	0: Local PG card 1: Extension PG card	2: Pulse input (DI5)	0	★
A2-30	A/B phase sequence of ABZ incremental encoder	0: Forward	1: Reverse	0	★
A2-31	Encoder installation angle	0.0 to 359.9°		0.0°	★
A2-34	Number of pole pairs of resolver	1 to 65535		1	★
A2-36	Encoder wire-break fault detection time	0.0s: No detection	0.1s to 10.0s	0.0	★
A2-37	Auto-tuning selection	0: No auto-tuning 1: Asynchronous motor partial static auto-tuning	2: Asynchronous complete dynamic auto-tuning 3: Asynchronous complete static auto-tuning	0	★
A2-38	Speed loop proportional gain 1	1 to 100		30	☆
A2-39	Speed loop integral time 1	0.01s to 10.00s		0.50s	☆
A2-40	Switchover frequency 1	0.00 to A2-43 (Switchover frequency 2)		5.00 Hz	☆
A2-41	Speed loop proportional gain 2	1 to 100		20	☆
A2-42	Speed loop integral time 2	0.01s to 10.00s		1.00s	☆
A2-43	Switchover frequency 2	A2-40 (Switchover frequency 1) to the maximum frequency		10.00 Hz	☆
A2-44	Vector control slip compensation gain	50% to 200%		100%	☆
A2-45	SVC torque filter constant	0.000s to 0.100s		0.000s	☆
A2-47	Torque limit source in speed control	0: Set by A2-48 (Digital setting of torque limit in speed control) 1: AI1 2: AI2 3: AI3 4: Pulse reference	5: Communication reference 6: Min. (AI1, AI2) 7: Max. (AI1, AI2) The full scale of 1-7 corresponds to A2-48.	0	☆
A2-48	Digital setting of torque limit in speed control	0.0% to 200.0%		150.0%	☆
A2-49	Torque limit source in speed control (regenerative)	0: Set by F2-10 (Digital setting of torque limit in speed control) 1: AI1 2: AI2 3: AI3 4: Pulse setting 5: Communication setting	6: Min. (AI1, AI2) 7: Max. (AI1, AI2) 8: Set by F2-12 [Digital setting of torque limit in speed control (regenerative)] The full scale of 1-7 corresponds to F2-12.	0	☆
A2-50	Digital setting of torque limit in speed control (regenerative)	0.0% to 200.0%		150.0%	☆
A2-51	Excitation adjustment proportional gain	0 to 20000		2000	☆
A2-52	Excitation adjustment integral gain	0 to 20000		1300	☆
A2-53	Torque adjustment proportional gain	0 to 20000		2000	☆
A2-54	Torque adjustment integral gain	0 to 20000		1300	☆
A2-55	Speed loop integral separation selection	Ones: Integral separation 0: Disabled	1: Enabled	0	☆

No.	Param. Name	Setting Range		Default	Change
A2-59	Max. torque coefficient of field weakening area	50% to 200%		100%	☆
A2-60	Regenerative power limit selection	0: Disabled	1: Enabled	0	☆
A2-61	Regenerative power limit	0.0 to 200.0%		Model dependent	☆
A2-62	Motor 2 control mode	0: SVC 1: FVC	2: V/F control	0	★
A2-63	Motor 2 acceleration/ deceleration time selection	0: Same to Motor 1 2: Acceleration/Deceleration time selection 2	3. Acceleration/Deceleration time selection 3 4: Acceleration/Deceleration time selection 4	0	☆
A2-64	Motor 2 torque boost	0.0%: Automatic torque boost	0.1% to 30.0%	Model dependent	☆
A2-66	Motor 2 oscillation suppression gain	0 to 100		40	☆
Group A5: Control Optimization					
A5-00	DPWM switchover frequency upper limit	5.00 Hz to the maximum frequency		8.00 Hz	☆
A5-01	PWM modulation pattern	0: Asynchronous modulation	1: Synchronous modulation	0	☆
A5-02	Dead zone compensation mode selection	0: Disabled	1: Enabled (compensation mode 1)	1	☆
A5-03	Random PWM depth	0: Random PWM invalid	1 to 10: Random PWM	0	☆
A5-04	Overcurrent fast prevention	0: Disabled	1: Enabled	1	☆
A5-05	Voltage over modulation coefficient	100% to 110%		105%	★
A5-06	Undervoltage threshold	Three phase 380 to 480 V models: 140.0 to 380.0 V Three phase 200 to 240 V models: 140.0 to 380.0 V		350 V	☆
A5-08	Low speed frequency	0.0 to 8.0 kHz		0.0	☆
A5-09	Overvoltage threshold	Three phase 380 to 480 V models: 200.0 to 820.0 V Three phase 200 to 240 V models: 200.0 to 400.0 V		Model dependent	★
A5-11	DC injection braking threshold at low speed	0.00 to 5.00 Hz		0.30 Hz	☆
Group A6: AI Curve Setting					
A6-00	AI curve 4 min. input	-10.00 V to A6-02 (AI curve 4 inflection 1 input)		0.00 V	☆
A6-01	Corresponding percentage of AI curve 4 min. input	-100.0% to +100.0%		0.0%	☆
A6-02	AI curve 4 inflection 1 input	A6-00 (AI curve 4 min. input) to A6-04 (AI curve 4 inflection 2 input)		3.00 V	☆
A6-03	Corresponding percentage of AI curve 4 inflection 1 input	-100.0% to +100.0%		30.0%	☆
A6-04	AI curve 4 inflection 2 input	A6-02 (AI curve 4 inflection 1 input) to A6-06 (AI curve 4 max. input)		6.00 V	☆
A6-05	Corresponding percentage of AI curve 4 inflection 2 input	-100.0% to +100.0%		60.0%	☆
A6-06	AI curve 4 max. input	A6-04 (AI curve 4 inflection 2 input) to +10.00 V		10.00 V	☆
A6-07	Corresponding percentage of AI curve 4 max. input	-100.0% to +100.0%		100.0%	☆
A6-08	AI curve 5 min. input	-10.00 V to A6-10 (AI curve 5 inflection 1 input)		-10.00 V	☆
A6-09	Corresponding percentage of AI curve 5 min. input	-100.0% to +100.0%		-100.0%	☆
A6-10	AI curve 5 inflection 1 input	A6-08 (AI curve 5 min. input) to A6-12 (AI curve 5 inflection 2 input)		-3.00 V	☆
A6-11	Corresponding percentage of AI curve 5 inflection 1 input	-100.0% to +100.0%		-30.0%	☆
A6-12	AI curve 5 inflection 2 input	A6-10 (AI curve 5 inflection 1 input) to A6-14 (AI curve 5 max. input)		3.00 V	☆

No.	Param. Name	Setting Range		Default	Change
A6-13	Corresponding percentage of AI curve 5 inflection 2 input	-100.0% to +100.0%		30.0%	☆
A6-14	AI curve 5 max. input	A6-12 (AI curve 5 inflection 2 input) to +10.00 V		10.00 V	☆
A6-15	Corresponding percentage of AI curve 5 max. input	-100.0% to +100.0%		100.0%	☆
A6-24	Jump point of AI1 input corresponding setting	-100.0% to 100.0%		0.0%	☆
A6-25	Jump amplitude of AI1 input corresponding setting	0.0% to 100.0%		0.5%	☆
A6-26	Jump point of AI2 input corresponding setting	-100.0% to 100.0%		0.0%	☆
A6-27	Jump amplitude of AI2 input corresponding setting	0.0% to 100.0%		0.5%	☆
A6-28	Jump point of AI3 input corresponding setting	-100.0% to 100.0%		0.0%	☆
A6-29	Jump amplitude of AI3 input corresponding setting	0.0% to 100.0%		0.5%	☆
Group A7: User Programmable Card					
A7-00	User programmable function selection	0: Disabled	1: Enabled	0	★
A7-01	Control board output terminal control mode selection	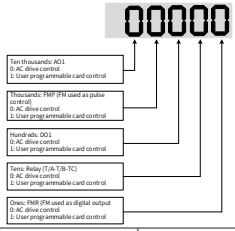		0	★
A7-02	Programmable card AI/AO function selection	0: AI3 (voltage input), AO2 (voltage output) 1: AI3 (voltage input), AO2 (current output) 2: AI3 (current input), AO2 (voltage output) 3: AI3 (current input), AO2 (current output)	4: AI3 (PTC input), AO2 (voltage output) 5: AI3 (PTC input), AO2 (current output) 6: AI3 (PT100 input), AO2 (voltage output) 7: AI3 (PT100 input), AO2 (current output)	0	★
A7-03	FMP output	0.0% to 100.0%		0.0%	☆
A7-04	AO1 output	0.0% to 100.0%		0.0%	☆
A7-05	Selection of PLC program controlling digital output	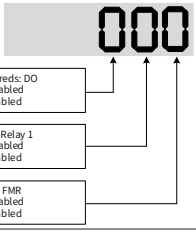		000	☆
A7-06	Setting frequency reference using the user programmable card	-100.00% to 100.00%		0.0%	☆

No.	Param. Name	Setting Range		Default	Change
A7-07	Setting torque reference using the user programmable card	-200.0% to 200.0%		0.0%	☆
A7-08	Setting running command using the user programmable card	0: No command 1: Forward run 2: Reverse run 3: Forward jog	4: Reverse jog 5: Coast to stop 6: Decelerate to stop 7: Fault reset	0	☆
A7-09	Setting torque reference with the user programmable card	0: No fault	80 to 89: User-defined fault code	0	☆
Group A8: Point-to-point Communication					
A8-00	Point-to-point communication	0: Disabled	1: Enabled	0	☆
A8-01	Master or slave selection	0: Master	1: Slave	0	☆
A8-02	Selection of action of the slave in point-to-point communication	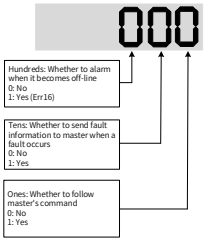		011	★
A8-03	Slave received data	0: Torque reference	1: Frequency reference	0	☆
A8-04	Zero offset of received data (torque)	-100.00% to 100.00%		0.00%	★
A8-05	Gain of received data (torque)	-10.00 to 100.00		1.00	★
A8-06	Point-to-point communication interruption detection time	0.0 to 10.0s		1.0s	☆
A8-07	Master data sending cycle in point-to-point communication	0.001 to 10.000s		0.001s	☆
A8-11	Window width	0.20 Hz to 10.00 Hz		0.50 Hz	☆
Group AC: AI/AO Correction					
AC-00	AI1 measured voltage 1	-10.00 V to +10.000 V		Factory-corrected	☆
AC-01	AI1 displayed voltage 1	-10.00 V to +10.000 V		Factory-corrected	☆
AC-02	AI1 measured voltage 2	-10.00 V to +10.000 V		Factory-corrected	☆
AC-03	AI1 displayed voltage 2	-10.00 V to +10.000 V		Factory-corrected	☆
AC-04	AI2 measured voltage 1	-10.00 V to +10.000 V		Factory-corrected	☆
AC-05	AI2 displayed voltage 1	-10.00 V to +10.000 V		Factory-corrected	☆
AC-06	AI2 measured voltage 2	-10.00 V to +10.000 V		Factory-corrected	☆
AC-07	AI2 displayed voltage 2	-10.00 V to +10.000 V		Factory-corrected	☆
AC-08	AI3 measured voltage 1	-10.00 V to +10.000 V		Factory-corrected	☆
AC-09	AI3 displayed voltage 1	-10.00 V to +10.000 V		Factory-corrected	☆

No.	Param. Name	Setting Range	Default	Change
AC-10	AI3 measured voltage 2	-10.00 V to +10.000 V	Factory-corrected	☆
AC-11	AI3 displayed voltage 2	-10.00 V to +10.000 V	Factory-corrected	☆
AC-12	AO1 target voltage 1	-10.00 V to +10.000 V	Factory-corrected	☆
AC-13	AO1 measured voltage 1	-10.00 V to +10.000 V	Factory-corrected	☆
AC-14	AO1 target voltage 2	-10.00 V to +10.000 V	Factory-corrected	☆
AC-15	AO1 measured voltage 2	-10.00 V to +10.000 V	Factory-corrected	☆
AC-16	AO2 target voltage 1	-10.00 V to +10.000 V	Factory-corrected	☆
AC-17	AO2 measured voltage 1	-10.00 V to +10.000 V	Factory-corrected	☆
AC-18	AO2 target voltage 2	-10.00 V to +10.000 V	Factory-corrected	☆
AC-19	AO2 measured voltage 2	-10.00 V to +10.000 V	Factory-corrected	☆

A.2 Monitoring Parameters

No.	Param. Name	Minimum Unit	Communication Address
Group U0: Monitoring Parameters			
U0-00	Running frequency	0.01 Hz	7000H
U0-01	Frequency reference	0.01 Hz	7001H
U0-02	Bus voltage	0.1 V	7002H
U0-03	Output voltage	1 V	7003H
U0-04	Output current	0.01 A	7004H
U0-05	Output power	0.1 kW	7005H
U0-06	Output torque	0.1%	7006H
U0-07	DI state	1	7007H
U0-08	DO state	1	7008H
U0-09	AI1 voltage	0.01 V	7009H
U0-10	AI2 voltage (V)/current (mA)	0.01 V/0.01 mA	700AH
U0-11	AI3 voltage	0.01 V	700BH
U0-12	Count value	1	700CH
U0-13	Length value	1	700DH
U0-14	Load speed	1 rpm/min	700EH
U0-15	PID reference	1	700FH
U0-16	PID feedback	1	7010H
U0-17	PLC stage	1	7011H
U0-18	Pulse reference	0.01 kHz	7012H
U0-19	Feedback speed	0.01 Hz	7013H
U0-20	Remaining running time	0.1 min	7014H
U0-21	AI1 voltage before correction	0.001 V	7015H
U0-22	AI2 voltage (V)/current (mA) before correction	0.001 V/0.01 mA	7016H
U0-23	AI3 voltage before correction	0.001 V	7017H
U0-24	Motor speed	1 rpm/min	7018H

No.	Param. Name	Minimum Unit	Communication Address
U0-25	Current power-on time	1 min	7019H
U0-26	Current running time	0.1 min	701 AH
U0-27	Pulse reference	1 Hz	701BH
U0-28	Communication reference	0.01%	701CH
U0-29	Encoder feedback speed	0.01 Hz	701DH
U0-30	Main frequency reference	0.01 Hz	701EH
U0-31	Auxiliary frequency reference	0.01 Hz	701FH
U0-32	Viewing any register address value	1	7020H
U0-34	Motor temperature	1°C	7022H
U0-35	Target torque	0.1%	7023H
U0-36	Resolver position	1	7024H
U0-37	Power factor angle	0.1°	7025H
U0-38	ABZ position	1	7026H
U0-39	Target voltage upon V/F separation	1 V	7027H
U0-40	Output voltage upon V/F separation	1 V	7028H
U0-41	DI state display	1	7029H
U0-42	DO state display	1	702AH
U0-43	DI set for function state display 1 (function 01-40)	1	702BH
U0-44	DI set for function state display 2 (function 41-80)	1	702CH
U0-45	Fault information	1	702DH
U0-58	Phase Z counting	1	703AH
U0-59	Rated frequency	0.01%	703BH
U0-60	Running frequency	0.01%	703CH
U0-61	AC drive state	1	703DH
U0-62	Current fault code	1	703EH
U0-63	Sending torque value of point-to-point communication	0.01%	703FH
U0-64	Number of slaves	1	7040H
U0-65	Torque upper limit	0.1%	7041H
U0-66	Communication extension card type	100: CANOpen 200: PROFIBUS-DP 300: CANlink	7042H
U0-67	Communication extension card version	Display range	-
U0-68	AC drive state on DP card	Bit0: AC drive running status Bit1: Running direction Bit2: Whether the AC drive has a fault Bit3: Target frequency reached Bit4 to Bit7: Reserved Bit8 to Bit15: Fault code	7043H
U0-69	Speed of transmitting DP/0.01 Hz	0.00 Hz to the maximum frequency	7044H
U0-70	Motor speed of transmitting DP/RMP	0 to rated motor speed	7045H
U0-71	Communication card current display	Display range	-
U0-72	Communication card faulty state	Display range	-
U0-73	Motor SN	0: Motor 1 1: Motor 2	7046H

No.	Param. Name	Minimum Unit	Communication Address
U0-74	AC drive output torque	0.1%	7047H
U0-76	Low bits of accumulative power consumption	0.1°	704CH
U0-77	High bits of accumulative power consumption	1°	704DH
U0-78	Linear speed	1 m/min	704EH

Warranty Agreement

1) Inovance provides an 18-month free warranty to the equipment itself from the date of manufacturing for the failure or damage under normal use conditions.
2) Within the warranty period, maintenance will be charged for the damage caused by the following reasons:
   a. Improper use or repair/modification without prior permission
   b. Fire, flood, abnormal voltage, natural disasters and secondary disasters
   c. Hardware damage caused by dropping or transportation after procurement
   d. Operations not following the user instructions
   e. Damage out of the equipment (for example, external device factors)
3) The maintenance fee is charged according to the latest Maintenance Price List of Inovance.
4) If there is any problem during the service, contact Inovance's agent or Inovance directly.
5) Inovance reserves the rights for explanation of this agreement.

Suzhou Inovance Technology Co., Ltd.

Address: No.16, Youxiang Road, Yuexi Town, Wuzhong District, Suzhou 215104, P.R. China

Website: http://www.inovance.com

Shenzhen Inovance Technology Co., Ltd.
Add.: Inovance Headquarters Tower, High-tech Industrial Park, Guanlan Street, Longhua New District,
Shenzhen 518000, P.R. China
Tel: (0755) 2979 9595
Fax: (0755) 2961 9897
http: //www.inovance.com

Suzhou Inovance Technology Co., Ltd.
Add.: No. 52, Tian E Dang Road, Wuzhong District, 215104, Suzhou City,
Jiangsu Province, P.R. China
Tel: (0512) 6637 6666
Fax: (0512) 6285 6720
http: //www.inovance.com

19010374A06

Copyright © Shenzhen Inovance Technology Co., Ltd.